Celebrating

40

1984 - 2024

years!

24/25 SPECIFICATION GUIDE

REV-A-SHELF®

tresco lighting

MESSAGE TO OUR VALUED CUSTOMERS:

As we embark on our 40th year in business, this major milestone is both a humbling experience and an exciting time to partner with us. Over the past year, we have not only concentrated on continuing to innovate with our new product offering but have also been working on our supply chain initiatives with our NEW Mexico wood manufacturing operation and our recent acquisition of Omega National Products. These initiatives further align our business with our commitment to wood cabinet accessories.
We recognize that our Specification Guide has evolved into an indispensable tool for designers, fabricators, cabinet shops, and dealers alike.

So, what's new in 2024?

- New Rev-A-Shelf® products have been added and are now in stock.
- Suggested List Pricing has been reintroduced for all items.
- Introduction of Tresco Lighting® 2024 products.

Our dedicated team of factory and independent reps is available to help you connect with our numerous distributor partners and resellers across the country. You can visit Rev-A-Shelf.com to find out who stocks our products in your area and how we can help you get set up.

Thank you for your ongoing support.

24/25 Specification Guide

REV-A-SHELF®
Innovation through Organization™

featuring

tresco lighting

What's Inside

Introduction 2
Contents 3
American Made 4
How-to's 5
Celebrating 6
New Products 8
Matte Black 13
Edge 14
Omega National 16
Waste Solutions 20
Blind Corner Solutions 60
Sink Solutions 79
Base Solutions 107
Tall Pantry Solutions 156
Drawer Solutions 176
Wall Solutions 212
Vanity Solutions 229
Closet Solutions 257
Lazy Susan 304
Hardware 335
LED Lighting 343
Index 408
Warranty/PROP 65/Terms 417
Homes for Our Troops 419

Proudly "Made in America" and manufactured and assembled in our two Kentucky facilities

Employing a local workforce of more than 400

America Proud

Louisville-based and family owned for three generations

PRODUCT CHART

We've simplified our product chart and added a couple of columns to help make your buying decisions easier.

Drawer Pullout w/ Euro Slides		
PRODUCT	DESCRIPTION	DIMS
4WDB-12	Pullout Drawer	11" (280 mm) W x 18-1/2" (470 mm) D x 5-5/8" (143 mm) H
4WDB-15	Pullout Drawer	14" (356 mm) W x 22-1/2" (572 mm) D x 5-5/8" (143 mm)
Drawer Pullout w/ BLUM Soft-Close		
4WDB4-18SC-1	Standard Drawer	14" (356 mm) W x 21-5/8" (549 mm) D x 4-7/8" (124 m
4WDB7-18SC-1	Tall Drawer with dividers	14" (356 mm) W x 21-5/8" (549 mm) D x 8" (203 mm) H
4WDB4-24SC-1	Standard Drawer	20" (508 mm) W x 21-5/8" (549 mm) D x 4-7/8" (124 mm
4WDB7-24SC-1	Tall Drawer with dividers	20" (508 mm) W x 21-5/8" (549 mm) D x 8" (203 mm) H

CAB	FIN
B15	Ma
B18	M

"CAB" = Typical Cabinet. We get it, professionals just want to know what size cabinet the product is designed for. So we've tried to identify the typical cabinet for each of our products.

"MCO" = Minimum Cabinet Opening. Our recommended minimum cabinet opening dimensions are based upon installation into 1-1/2" face frame cabinets. This is important because occasionally the width of the product is wider than the part of the product that pulls out of the cabinet.

MCO
12" (305 mm)
15" (381 mm)

When both face frame and frameless dimensions are needed, we have listed them as FFMCO and FLMCO. The FF is for face frame and the FL for frameless (aka full access).

When both face frame and frameless typical cabinet recommendations are provided we have listed them as FF for face frame and FL for frameless (aka full access).

Note: unless otherwise noted, typical cabinet recommendations are based upon 1-1/2" face frame cabinet construction.

COLOR NUMBER CODE

White	11	Blue	22	Orange	20
Black	18	Gray	14	Yellow	21
Orion Gray	13	Champagne	12	Brown	10
Silver	17	Green	19		
Almond	15	Red	16		

WHAT DOES THIS MEAN?

You will notice that our charts contain columns that house MCO's and CAB's for that specific product. Below you will find a bank of what those letters mean.

REV-A-SHELF® Innovation through Organization™

FF	FL	FH	B	T	W	SB	VB	BC
Face Frame	Full Access (frameless)	Full Height	Door/ Drawer	Tall Cabinet	Wall Cabinet	Sink Base	Vanity Base	Blind Corner
a cabinet that has a fixed frame to the front of the cabinet	a cabinet that allows full accessibility by eliminating the face frame of the cabinet	a cabinet without a drawer opening, using the whole height of the cabinet	a cabinet that has a drawer atop the cabinet opening	Tall/ Utility cabinets	a cabinet designed to be mounted above counter tops	a cabinet designed to be used with a sink	a shorter depth cabinet designed to be used in a vanity or bathroom	a cabinet that is in the corner of your kitchen

Celebrating 40 years!

1984 - 2024

For over **four decades**, our commitment to delivering original products, meticulously designed and crafted at our facility in Louisville, Kentucky has been unwavering. Our tradition of innovation continues as we once again introduce a new range of solutions designed to enhance storage and organization in various spaces, from kitchens, bathrooms, closets, pantries and beyond.

Innovation through ***Organization***™

Where it began

In 1961 with funding from their family and friends, Harry and Larry Jones started a one machine plastic manufacturing operation. Along with their wives Nancy and Skeet, and six children in tow, the family business began.

Initially, Jones Plastic manufactured whiskey caps for liquor bottles. Excellence in quality and customer service led to growth, and soon they would produce everything from "Star Wars" toys for Kenner in the 1970s to appliance parts for General Electric. Another early plastic manufacturing job was for the "Revolve-A-Shelf," a plastic lazy susan for a California company named Ajax Hardware.

In 1978, Jones Plastic expanded its holdings with the acquisition of that division of Ajax Hardware. The establishment of Rev-A-Shelf®, a division of Jones Plastic & Engineering Company, soon followed. As the Rev-A-Shelf® product family grew, so did Jones Plastic. In the early 90s, Jones Plastic pioneered the use of gas assist, high-speed molding, and component kitting. It was their expertise in molding and their reputation for helping their customers distribute products to the market that paved the way to success. It reduced handling labor and shipping costs, which prompted expansions in Kentucky, Tennessee, and locations in Monterrey and Juarez, Mexico.

Meanwhile, our product line, which originated as a manufacturer of metal and polymer lazy susan components, has since grown into the market-leading innovator of residential cabinet storage and organization products of both quality and functionality. "We had high

- Harry & Larry Jones

REV-A-SHELF®

hopes for this company when we started it. With the help of so many hardworking employees and great leadership, Rev-A-Shelf® has grown into an international company with an unequivocal reputation for very high-quality storage solutions," said Harry Jones.

For over 30 years, Tresco Lighting® has been committed to creating innovative and affordable products, reinforced by unequal quality and service. In 2011, Rev-A-Shelf® acquired Tresco® and the mission has remained the same. We continue to broaden product offerings, expand distribution, and develop growth. In 2023, we opened our new plant in Juarez, Mexico. Dedicated entirely to producing our wood products, the opening of the plant is another example of our commitment to providing cost-effective and quality products, made in North America. It expands capacity and reinforces our investment in the future.

- Rev-A-Shelf® Headquarters - Louisville, Ky

Lightfair 2017

Today

As of 2024, we have acquired Omega National Products! We believe this move will allow us to innovate in ways not possible before, and set us apart even further from the competition. We currently employ approximately 435 people in our 315,000 square foot facility in Louisville, KY. Our mission of "changing the way you think about cabinet organization" wouldn't be possible without our amazing staff. From product development, to production, and to sales and marketing: we have the best team in the world!

- Rev-A-Shelf® Mexico Headquarters - Juarez, Mexico

444 Series
Modular Base Cabinet Pullout

P124

NEW!

4OXO Series
OXO Drawer Insert

P180

NEW!

4DMKB Series
Door Mount Tip-Out Knife Storage

P122

NEW!

4PIL Series
Maple Pilaster System

P128/160

NEW!

4UH Series
Universal Holder Pullout

P123

NEW!

4WCWM Series
Waste Management System

P22

NEW!

4WCT Series
"Right Fit" Cutlery Drawer Insert

P198

NEW!

4WUT Series
"Right Fit" Utensil Drawer Insert

P199

NEW!

4WDIV Series
Shallow Drawer Divider Insert

P181

NEW!

5WU Series
Upright Storage Pullout

P214

NEW!

4WLS87 Series
Girasolo Maple Blind Corner Organizer

P67

NEW!

RV Series
Bi-Directional Lid

P32

NEW!

4SDI-T Series
Deep Drawer Insert

P179

NEW!

4WDB Series
Base Drawer Pullout

P126

NEW DESIGN!

4ADI Series
Adjustable Deep Divider Insert

P178

NEW!

4WDR Series
Drying Rack Drawer

P183

NEW!

544 Series
Undersink Caddy Pullout

P106

NEW
DESIGN!

Innovation through *Organization*™

New MATTE BLACK Finish!

See Closet Section p257

Always INNOVATING

Brand-new matte black closet accessories by Rev-A-Shelf® and cutting-edge Neoloop silicone flexible lighting by Tresco® Lighting are here to revolutionize your space, making it both functional and brilliantly illuminated!

EDGE WARDROBE LINE

SARTORIAL ELEGANCE

REV-A-SHELF® Innovation through Organization™

EIGE SOLUZIONI PER MOBILI - FURNITURE STORAGE SOLUTIONS

2023 WINNER

IDA DESIGN AWARDS 2023

GOOD DESIGN

COMING SUMMER 2024

THE EDGE collection makes modularity its distinctive component. Designed to contain and organize, drawers, trouser racks, skirt racks, shoe racks and laundry racks-are all removable, extractable and cushioned - they marry technology and elegance. The rubber profiles of the frames and the rods - and the special trays material - dampen noise and protect both garments and accessories. The semi-glossy, vibrant warm grey metal, which characterizes all the elements of the collection, is an additional touch of charm, capturing light in soft gleams and enhancing the soft and warm style of the sleeping area, drawing evocative geometries that cuddle clothes and accessories in an endless aesthetic liason.

Welcome to the Family!

REV-A-SHELF®

Omega National

PRODUCTS

"We are extremely excited for Omega National Products to join our organization. As we continue to make these strategic investments, this only strengthens our capabilities in developing wood organization products and accessories that our customers demand," said Steve Jones, GM/VP of Consumer Sales. "We truly believe our mutual customer base will benefit greatly from our expanded capabilities and supply chain options."

NEOLOOP

PG 372

Bold lighting for bright applications; achieve consistent, seamless illumination from start to finish with Neoloop flexible silicone LED lighting. Shatterproof and watertight, Luniform technology provides a continuous beam of light. This makes Neoloop perfect for adding light to dark millwork, creating unique wall designs, outlining commercial logos, accent lighting and more. Rated for indoor, outdoor*, damp and wet* locations.

*When used with factory-installed inputs

DIMMABLE · LUNIFORM · 5 YEAR WARRANTY · CUTTABLE · CLOSET LISTED · IP65 · c UL us LISTED

IMPROVED DESIGN

EUROLINX 2.0

PG 360

At 4W and over 200 lumens per foot, Eurolinx 2.0 is a top pick for sleek, high-end illumination. Using a specialized diffuser and reflector technology to achieve Luniform output, the flat profile blends in with any residential/commercial application. Newly redesigned components ensure tight and reliable connections, and included surface mounting u-clips make installation a breeze.

CE · DIMMABLE · LUNIFORM · 5 YEAR WARRANTY · c UL us LISTED

IMPROVED DESIGN

ROUND CONTROLLERS

PG 401

Single Door Sensor

Door open, light on; door closed, light off
Sensor Range: 1/16" - 2" (2 mm - 50 mm)

Two Door Sensor

Either door open, light on; both doors closed, light off
Sensor Range: 1/16" - 2" (2 mm - 50 mm)

Touch Dimmer

Touch on/off and 0-100% dimming control
Hold finger down for dimming
Touch dimmer once to turn on/off
Power failure memory (retains last setting)

Motion Sensor

Turns on when human motion is detected
Sensor Range: 0" – 118" (0 mm – 3000 mm)
Viewing degree: 120°
Time on: 30 seconds if no motion is detected

PROP 65 WARNING FOR CALIFORNIA RESIDENTS

WARNING: These products can expose you to chemicals such as formaldehyde, lead or styrene, which are known to the State of California to cause cancer and birth defects or other reproductive harm. For more information go to www.P65Warnings.ca.gov

REV-A-SHELF®

WASTE

Renowned as the most complete and thorough line available, Rev-A-Shelf's waste container series includes traditional wire, classic wood, stainless steel and aluminum frames, paired with our polymer and Compo+ containers. We have designed a pullout waste container for every situation in your home. The options are endless.

Innovation through ***Organization***™

4WCWM Series

Maple Bottom Mount Waste Management Center

NEW!

blum

4WCWM-2435DMSC-4

- Designed for 24" base cabinets
- Natural maple construction with a semi-gloss finish
- Reversible design
- BLUM soft-close slides
- Side storage compartment with a waterproof vinyl lining
- Mounts to cabinet floor and door
- Patented pre-assembled door-mount brackets (US Patent No, 8,338,076)
- 4WCWM-4 includes (2) 35 or 50 qt. silver polymer waste containers, (1) green lid, (2) 8 L waste containers, (2) 8 L. lids (one white and one green) and (1) removable beauty ring
- 4WCWM-2 includes (2) 35 or 50 qt. silver polymer waste containers and (1) green lid
- Compatible with BLUM SERVO-DRIVE Technology, uses standard 110V wall socket (sold separately) and TIP-ON mechanism (sold separately)
- Additional or replacement 35 and 50 qt. polymer lids available (sold separately)
- TSCA Title VI compliant

NOTE: Depending on cabinet construction and pull hardware, a lid on the rear waste bin may not fully function See pg. 30 for replacement containers and pg. 32 for lids.

Double 50 qt. Waste container with side storage

Double 50 qt. Waste container with double 8 L bins

Double 35 qt. Waste container with double 8 L bins

Maple Bottom Mount Waste Management Center w/ BLUM Soft-Close

PRODUCT	DESCRIPTION	DIMS	MCO	CAB	FINISH	SLP
4WCWM-2435DMSC-2	Double 35 qt.	20-31/32" (533 mm) W x 22-1/32" (560 mm) D x 20-21/32" (526 mm) H	21" (534 mm)	B24	Silver/Maple	$595.95
4WCWM-2435DMSC-4	Dbl. 35 qt. & Dbl. 8 L	20-31/32" (533 mm) W x 22-1/32" (560 mm) D x 20-21/32" (526 mm) H	21" (534 mm)	B24	Silver/Maple	$604.65
4WCWM-2450DMSC-2	Double 50 qt.	20-31/32" (533 mm) W x 22-1/32" (560 mm) D x 24-9/16" (625 mm) H	21" (534 mm)	FHB24	Silver/Maple	$607.55
4WCWM-2450DMSC-4	Dbl. 50 qt. & Dbl. 8 L	20-31/32" (533 mm) W x 22-1/32" (560 mm) D x 24-9/16" (625 mm) H	21" (534 mm)	FHB24	Silver/Maple	$616.40

4WCOX Series

Wood Bottom Mount Waste Center

- Designed for 24" door/drawer base cabinets
- Natural maple dovetail construction with a semi-gloss finish
- Blum soft-close slides
- Patented door-mount brackets with micro-adjustment (US Patent No: 8,338,076)
- (1) reversible left-hand or right-hand mounted compartment
- Included accessories: (2) 35 qt., BPA-free polymer containers, white, (2) lids, white, and (1) 1.7 qt. OXO container
- Mounts to cabinet floor and door
- TSCA Title VI compliant

4WCOX-24DMSC-1
Wood Bottom Mount Waste Container w/ OXO & Storage

Wood Bottom Mount Waste Container with OXO and Storage

PRODUCT	DESCRIPTION	DIMS	MCO	CAB	FINISH	SLP
4WCOX-24DMSC-1	Double 35 qt. w/ OXO & Storage	20-31/32" (533 mm) W x 22-1/32" (560 mm) D x 20-21/32" (526 mm) H	21" (534 mm)	B24	Maple/White	$623.50

RV White Wire Bottom Mount

- Designed for a multitude of cabinet sizes
- Single 30, 35 and 50 qt. and double 27 and 35 qt. polymer containers, white
- 4-screw installation
- White powder-coated welded wire frame
- 3/4 or full-extension, ball-bearing slides
- Mounts to cabinet floor
- Door mount kit (sold separately)
- 35 and 50 qt. polymer lids available (sold separately)

RV-18PB-2 S

RV-15PB-2 S
RV Wire Bottom Mount w/ Full-Extension Slides
(Double 27 qt. shown)

RV-18PB-1
RV Wire Bottom Mount w/ 3/4-Extension Slides
(Single 35 qt. shown)

RV White Wire Bottom Mount Waste Container Pullouts w/ Full-Extension Slides

PRODUCT	DESCRIPTION	DIMS	MCO	CAB	FINISH	SLP
RV-9PB S	Single 30 qt.	9-21/32" (246 mm) W x 22" (559 mm) D x 19-13/32" (494 mm) H	9-1/2" (248 mm) - FF 9-5/8" (245 mm) - FL	B15	White	$118.90
RV-12PB S	Single 35 qt.	10-15/32" (266 mm) W x 22-5/16" (567 mm) D x 19-1/4" (490 mm) H	10-1/2" (267 mm) - FF 10-3/4" (273 mm) - FL	B15	White	$131.95
RV-12PB-LE	Single 35 qt. w/ (1) Lid	10-15/32" (266 mm) W x 16-1/16" (408 mm) D x 20-5/32" (512 mm) H	10-5/8" (270 mm) - FF 10-5/8" (270 mm) - FL	B15	White	$152.25
RV-12PB-50 S	Single 50 qt. w/ (1) Lid	10-11/16" (272 mm) W x 22-5/16" (567 mm) D x 24-1/16" (611 mm) H	12-3/8" (314 mm)	FHB15	White	$134.85
RV-15PB-2 S	Double 27 qt.	11-25/32" (300 mm) W x 22-1/4" (566 mm) D x 19-5/32" (487 mm) H	11-15/16" (303 mm)	B15	White	$162.40
RV-18PB-2 S	Double 35 qt.	14-7/32" (361 mm) W x 22" (559 mm) D x 19-1/4" (489 mm) H	14-1/2" (368 mm)	B18	White	$173.30
RV White Wire Bottom Mount Waste Container Pullouts w/ 3/4-Extension Slides						
RV-9PB	Single 30 qt.	9-1/2" (242 mm) W x 22-5/16" (567 mm) D x 19-13/32" (494 mm) H	9-1/2" (248 mm) - FF 9-5/8" (245 mm) - FL	B15	White	$113.10
RV-12PB	Single 35 qt.	10-15/32" (266 mm) W x 22-5/16" (567 mm) D x 19-1/4" (490 mm) H	10-1/2" (267 mm) - FF 10-3/4" (273 mm) - FL	B15	White	$117.45
RV-12PB-L	Single 35 qt. w/ (1) Lid	10-15/32" (266 mm) W x 22-5/16" (567 mm) D x 20-5/32" (512 mm) H	10-5/8" (270 mm) - FF 10-5/8" (270 mm) - FL	B15	White	$121.80
RV-18PB-1	Single 35 qt.	14-7/32" (361 mm) W x 22" (559 mm) D x 19-1/4" (489 mm) H	14-1/2" (368 mm)	B18	White	$131.95
RV-12PB-50	Single 50 qt. w/ (1) Lid	10-11/16" (272 mm) W x 22-5/16" (567 mm) D x 24-1/16" (611 mm) H	11-3/8" (289 mm)	FHB18	White	$129.05
Accessories						
RV DM KIT	Heavy Duty Door Mount Kit					$39.15

RV Series

RV Chrome Wire Bottom Mount

- Designed for a multitude of cabinet sizes
- Single 35 qt. and double 27 and 35 qt. polymer containers, black or metallic silver
- 4-screw installation
- Chrome-plated wire frame
- Full-extension, ball-bearing slides
- Rear storage with all single units
- Mounts to cabinet floor
- Door mount kit (sold separately)
- 35 qt. polymer lids available (sold separately)
- Compo+ US Patent Nos.: 8,978,917/ 9,309,049/ 9,669,995

RV-18KD-17C S

RV-12KD-18C S
Single 35 qt. Waste Container
(Chrome/Black finish shown)

RV-12KD-CKGR-S
RV Compost w/ Full-Extension Slides
(Green and chrome finish shown)

NOTE: Depending on cabinet construction and pull hardware, a lid on the rear waste container may not fully function. See pg. 30 for replacement containers and pg. 32 for lids.

** select "BK" for black, "GR" for green,"OG" for orion gray, "WH" for white

RV Chrome Wire Bottom Mount Waste Container Pullouts w/ Full-Extension Slides

PRODUCT	DESCRIPTION	DIMS	MCO	CAB	FINISH	SLP
RV-12KD-17C S	Single 35 qt. w/ 18" slides	10-15/32" (266 mm) W x 22" (559 mm) D x 19-1/4" (489 mm) H	10-3/4" (273 mm)	B15	Silver/Chrome	$113.10
RV-12KD-18C S	Single 35 qt. w/ 18" slides	10-15/32" (266 mm) W x 21-1/8" (537 mm) D x 18-13/16" (479 mm) H	10-3/4" (273 mm)	B15	Black/Chrome	$113.10
RV-15KD-17C S	Double 27 qt.	11-1/2" (293 mm) W x 22-1/4" (566 mm) D x 18-27/32" (479 mm) H	12" (305 mm) - FF 11-15/16" (303 mm) - FL	B15	Silver/Chrome	$142.80
RV-15KD-18C S	Double 27 qt.	11-1/2" (293 mm) W x 22-1/4" (566 mm) D x 18-27/32" (479 mm) H	12" (305 mm) - FF 11-15/16" (303 mm) - FL	B15	Black/Chrome	$142.80
RV-18KD-17C S	Double 35 qt.	14-7/32" (361 mm) W x 22" (559 mm) D x 19-1/4" (489 mm) H	14-1/2" (368 mm)	B18	Silver/Chrome	$162.40
RV-18KD-18C S	Double 35 qt.	14-7/32" (361 mm) W x 22" (559 mm) D x 19-1/4" (489 mm) H	14-1/2" (368 mm)	B18	Black/Chrome	$162.40
RV Chrome Wire Bottom Mount Compost Pullout w/ Full-Extension Slides						
RV-12KD-CK**-S	Single Compo+	10-3/4" (274 mm) W x 18-15/16" (481 mm) D x 17-29/32" (455 mm) H	11" (279 mm)	B15	**/ Chrome	$188.50
Accessories						
RV DM17 KIT	Heavy Duty Door Mount Kit				Silver Epoxy	$39.15
CK-1117-**-1	Replacement Compo+ Bin	10-3/4" (274 mm) W x 13-29/32" (354 mm) D x 16-29/32" (430 mm) H				$81.20
CP-BAGROLL-1	Replacement Compost Bags (1 Roll, 12 Bags)					$11.60
CP-FILTER-1	Replacement Charcoal Filter (2)					$14.50

Chrome Universal Waste Pullout

RUKD Series

- Designed for 12" and 18" base cabinet*
- Universal frame configuration
- Single 20 and 32 qt. polymer containers, gray
- Chrome-plated welded wire frame
- Full-extension, ball-bearing slides
- Clip-on handle
- RB versions come with a rear storage basket
- 4-screw installation
- Mounts to cabinet floor
- RV DM17 KIT door-mount kit (sold separately)

** Can be installed in sink base applications*

Chrome-plated welded wire frame

RUKD-1420RB-1
Chrome Universal Waste Pullout
(Single 20 qt. version shown)

RUKD-932-1
Chrome Universal Waste Pullout
(Single 32 qt. version shown)

Chrome Universal Waste Pullout

PRODUCT	DESCRIPTION	DIMS	MCO	CAB	FINISH	SLP
RUKD-820-1	Single 20 qt.	8-1/2" (216 mm) W x 16-1/8" (410 mm) D x 16-5/8" (422 mm) H 14-11/32" (364 mm) W x 16-1/8" (410 mm) D x 16-5/8" (422 mm) H	8-1/2" (216 mm) 14-1/2" (368 mm)	B12 B18	Gray/Chrome	$102.95
RUKD-1420RB-1	Single 20 qt. w/ Rear Basket	14-1/2" (368 mm) W x 15-3/4" (400 mm) D x 16-5/8" (422 mm) H	14-1/2" (368 mm)	B18	Gray/Chrome	$108.75
RUKD-932-1	Single 32 qt.	9-3/8" (238 mm) W x 15-3/4" (400 mm) D x 19-1/2" (495 mm) H 14-1/2" (368 mm) W x 16-7/16" (418 mm) D x 19-1/2" (495 mm) H	9-1/2" (241 mm) 14-1/2" (368 mm)	B12	Gray/Chrome	$105.85
RUKD-1432RB-1	Single 32 qt. w/ Rear Basket	14-1/2" (368 mm) W x 16-7/16" (418 mm) D x 19-1/2" (495 mm) H	14-1/2" (368 mm)	B18	Gray/Chrome	$113.85
Accessories						
RV DM17 KIT	Heavy Duty Door Mount Kit				Chrome	$39.15

CK Series

Compo+

CK-1117-13-1

- Available in (4) color options - black, green, orion gray or white
- 24 qt. capacity
- Odor-reducing mechanism that opens when the lid is raised and seals when the lid is closed
- A removable no-mess trash carriage
- (12) compostable liners
- (2) carbon filters that eliminate odors
- Air vents to help speed the compost process
- Compo+ US Patent Nos.: 8,978,917/ 9,309,049/ 9,669,995

Scan for video

HOW IT WORKS

NOTE: For more information on each frame option, please see pg. 26 for RV Series, pg. 38 for 5349 Series, pg. 48 for 4WCSC/D Series and pg. 52 for 4WCTM Series. Depending on cabinet construction and pull hardware, a lid on the rear waste container may not fully function. See pg. 30 for replacement containers.

4WCSC-1835CKBK-2
Maple Bottom Mount Compo+
w/ 35 qt. Waste Container
(Black/ White finish shown)

5349-18CKOG-2
Aluminum Bottom Mount Compo+
w/ 35 qt. Waste Container
(Orion Gray/ White finish shown)

4WCTM-18CKWHSCDM2
Maple Top Mount Compo+
w/ 35 qt. Waste Container
(Maple/ White finish shown)

CK-1117-WH-1
Compo+ Bin
(White finish shown)

Removable waste carriage for easy
waste transport

RV-12KD-CKGR-S
RV Compost w/ Full-Extension
Slides
(Green and chrome finish shown)

Includes charcoal filter and (12)
compostable waste bags

RV DM KIT door-mount kit
(*sold separately*)

** select "BK" for black, "GR" for green,"OG" for orion gray, "WH" for white

RV Chrome Wire Bottom Mount Compost Pullout w/ Full-Extension Slides						
PRODUCT	**DESCRIPTION**	**DIMS**	**MCO**	**CAB**	**FINISH**	**SLP**
RV-12KD-CK**-S	Single Compo+	10-3/4" (274 mm) W x 18-15/16" (481 mm) D x 17-29/32" (455 mm) H	11" (279 mm)	B15	**/ Chrome	$188.50
Aluminum Bottom Mount Compost Pullouts w/ Soft-Close						
5349-15CK**-1	Single Compo+	10-3/4" (274 mm) W x 17-15/16" (456 mm) D x 18-1/8" (460 mm) H	10-13/16" (275 mm)	B15	**/Alum	$461.85
5349-18CK**-2	Compo+ w/ 35 qt. Container	14-25/32" (376 mm) W x 22-3/32" (562 mm) D x 19-1/32" (484 mm) H	15" (381 mm) - FF 14-15/16" (379 mm) - FL	B18	**/White/ Alum	$482.85
Maple Bottom Mount Compost Pullouts w/ Soft-Close						
4WCSC-CK**-1	Single Compo+	11-31/32" (305 mm) W x 18-15/32" (469 mm) D x 18-9/16" (472 mm) H	12" (305 mm)	B15	**/Maple	$477.05
4WCSC-1835CK**-2	Compo+ w/ 35 qt. Container	15" (381 mm) W x 22" (559 mm) D x 19-1/4" (489 mm) H	15" (381 mm)	B18	**/White/ Maple	$582.25
Maple Top Mount Compost Pullouts w/ Soft-Close						
4WCTM-12CK**SCDM1	Single Compo+	12" (305 mm) W x 22-7/8 - 24-7/8" (582 - 632 mm) D x 16-15/16" (431 mm) H	12" (305 mm)	B15	**/Maple	$297.25
4WCTM-18CK**SCDM2	Compo+ w/ 35 qt. Container	15" (381 mm) W x 22-7/8 - 24-7/8" (582 - 632 mm) D x 19-27/32" (504 mm) H	15" (381 mm)	B18	**/White/ Maple	$297.25
Accessories						
RV DM KIT	Heavy Duty Door Mount Kit - For RV series only				White	$39.15
RV DM17 KIT	Heavy Duty Door Mount Kit - For RV series only				Silver Epoxy	$39.15
CK-1117-**-1	Replacement Compo+ Bin					$81.20
CP-BAGROLL-1	Replacement Compost Bags (1 Roll, 12 Bags)					$11.60
CP-FILTER-1	Replacement Charcoal Filter (2)					$14.50

Replacement Containers

CUSTOM COLOR?
We CAN Do It!

- Do you just need a replacement? Here's a list of all the waste containers available.

4TMBIN

PRODUCT	SERIES
6700-61-13-52	5LB
CK-1117-**-1	Compo+, 5349, RV, 4WCSC
6700-61-6	RV-9, 568 Series
RV-1024W	RV-15, 4WCTM-15 and 4WCTM-27-4
RV-1024-13-10	53WC Series
RV-1024-17-10	5149, 5349 Series
RV-1024-18-10	RV-15KD-18C S
RV-20-6	RV-8 and RV-14
RV-35-8	RV-12, RV-18, 5149, 5349 Series and 4WCTM Series
RV-35-13-8	53WC Series, 4WC-WN, 5LB
RV-50-13-8	53WC Series, 4WC-WN, 4WCTM-WNRM, 5LB
RV-35-17-8	5149, 5349, 4WCSD, 4WCSC, RV, 53WC Series
RV-35-18-8	RV Series
RV-35-12-8	53WC Series
RV-50-8	RV-12PB-50 and 4WCTM Series
RV-50-17-8	5149, 5349, 4WCSD, 4WCSC, RV, 53WC Series
RV-50-12-8	53WC Series
RV-50WL-8	RV-12PB-50 S
RV-8-1711-1	53TM Series, 4SOWC Series, 5SB Series
RV-8-1719-1	53TM Series, 4SOWC Series
4TMBIN (ALL)	4WTCM Series (except 4WCTM-RM)

NEW

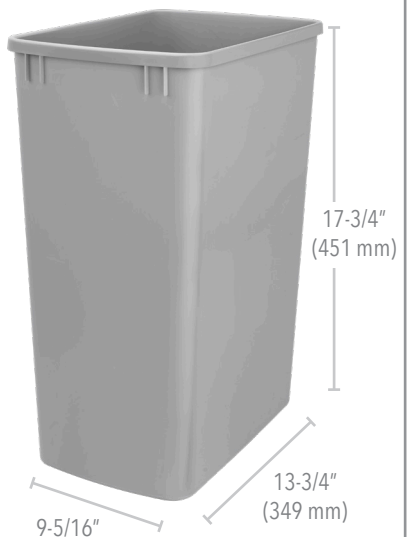

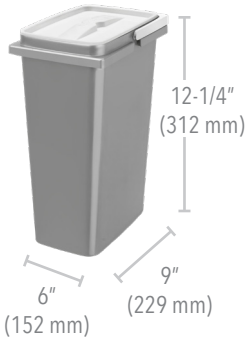

** select "BK" for black, "GR" for green,"OG" for orion gray, "WH" for white

Replacement Waste Containers (Bulk Pack)

PRODUCT	DESCRIPTION	DIMS	FINISH	SLP
RV-32-11-8	(8) 32 qt.	13-3/4" (349 mm) W x 9-5/16" (237 mm) D x 17-3/4" (451 mm) H	White Polymer	$17.40 ea.
RV-32-14-8	(8) 32 qt.	13-3/4" (349 mm) W x 9-5/16" (237 mm) D x 17-3/4" (451 mm) H	Gray Polymer	$17.40 ea.
RV-32-17-8	(8) 32 qt.	13-3/4" (349 mm) W x 9-5/16" (237 mm) D x 17-3/4" (451 mm) H	Silver	$25.40 ea.
RV-20-6	(6) 20 qt.	8-1/4" (210 mm) W x 14-7/32" (362 mm) D x 14-7/8" (378 mm) H	White Polymer	$16.70 ea.
RV-20-14-6	(6) 20 qt.	8-1/4" (210 mm) W x 14-7/32" (362 mm) D x 14-7/8" (378 mm) H	Gray Polymer	$16.70 ea.
RV-35-8	(8) 35 qt.	14-7/32" (361 mm) W x 10-15/32" (266 mm) D x 17-27/32" (454 mm) H	White Polymer	$24.65 ea.
RV-35-12-8	(8) 35 qt.	14-7/32" (361 mm) W x 10-15/32" (266 mm) D x 17-27/32" (454 mm) H	Champagne Polymer	$24.65 ea.
RV-35-13-8	(8) 35 qt.	14-7/32" (361 mm) W x 10-15/32" (266 mm) D x 17-27/32" (454 mm) H	Orion Gray Polymer	$24.65 ea.
RV-35-17-8	(8) 35 qt.	14-7/32" (361 mm) W x 10-15/32" (266 mm) D x 17-27/32" (454 mm) H	Metallic Silver Polymer	$24.65 ea.
RV-35-18-8	(8) 35 qt.	14-7/32" (361 mm) W x 10-15/32" (266 mm) D x 17-27/32" (454 mm) H	Black Polymer	$24.65 ea.
RV-50-8	(8) 50 qt.	14-3/4" (375 mm) W x 10-21/32" (272 mm) D x 21-3/4" (553 mm) H	White Polymer	$35.25 ea.
RV-50-13-8	(8) 50 qt.	14-3/4" (375 mm) W x 10-21/32" (272 mm) D x 21-3/4" (553 mm) H	Orion Gray Polymer	$33.35 ea.
RV-50-12-8	(8) 50 qt.	14-3/4" (375 mm) W x 10-21/32" (272 mm) D x 21-3/4" (553 mm) H	Champagne Polymer	$33.35 ea.
RV-50-17-8	(8) 50 qt.	14-3/4" (375 mm) W x 10-21/32" (272 mm) D x 21-3/4" (553 mm) H	Metallic Silver Polymer	$33.35 ea.
RV-1024W	(8) 27 qt.	10-7/8" (277 mm) W x 10-7/8" (277 mm) D x 17-3/4" (451 mm) H	White Polymer	$24.65 ea.
RV-1024-17-10	(10) 27 qt.	10-7/8" (277 mm) W x 10-7/8" (277 mm) D x 17-3/4" (451 mm) H	Metallic Silver Polymer	$24.65 ea.
RV-1024-18-10	(10) 27 qt.	10-7/8" (277 mm) W x 10-7/8" (277 mm) D x 17-3/4" (451 mm) H	Black Polymer	$24.65 ea.
4WCTM Replacement Polymer Rear Storage Bins				
4TMBIN-6	(6) Replacement Polymer Bins	10-11/32" (263 mm) W x 7-1/4" (185 mm) D x 6-11/32" (162 mm) H	White Polymer	$11.00 ea.
4TMBIN-15-6	(6) Replacement Polymer Bins	10-11/32" (263 mm) W x 7-1/4" (185 mm) D x 6-11/32" (162 mm) H	Almond Polymer	$11.60 ea.
4TMBIN-17-6	(6) Replacement Polymer Bins	10-11/32" (263 mm) W x 7-1/4" (185 mm) D x 6-11/32" (162 mm) H	Metallic Silver Polymer	$13.20 ea.

RV Series

Replacement Lids

NEW!

- Polymer lids for 27, 35 and 50 qt. polymer containers:
  White (11)
  Champagne (12)
  Orion gray (13)
  Gray (14)
  Metallic silver (17)
  Black (18)
  Blue (22)
  Green (G)
- Bi-Directional polymer lid for 32 qt. containers:
  White (11)
  Gray (14)
  Metallic silver (17)
  Blue (22)
  Green (G)

BLACK | CHAM-PAGNE | GREEN | GRAY | METALLIC SILVER | ORION GRAY | WHITE | BLUE

Polymer Lids for 35 and 50 qt. Waste Containers

PRODUCT	DESCRIPTION	FINISH	SLP
RV-1024-LID-1	27 qt. Waste Container Lid	White	$19.55
RV-1024-LID-12-1	27 qt. Waste Container Lid	Champagne	$19.55
RV-1024-LID-13-1	27 qt. Waste Container Lid	Orion Gray	$19.55
RV-1024-LID-14-1	27 qt. Waste Container Lid	Gray	$19.55
RV-1024-LID-17-1	27 qt. Waste Container Lid	Metallic Silver	$19.55
RV-1024-LID-22-1	27 qt. Waste Container Lid	Blue	$19.55
RV-1024-LID-G-1	27 qt. Waste Container Lid	Green	$19.55
RV-32-LID-1	32 qt. Bi-Directional Waste Container Lid	White	$20.45
RV-32-LID-14-1	32 qt. Bi-Directional Waste Container Lid	Gray	$20.45
RV-32-LID-17-1	32 qt. Bi-Directional Waste Container Lid	Metallic Silver	$20.45
RV-32-LID-22-1	32 qt. Bi-Directional Waste Container Lid	Blue	$20.45
RV-32-LID-G-1	32 qt. Bi-Directional Waste Container Lid	Green	$20.45
RV-35-LID-1	35 qt. Waste Container Lid	White	$21.75
RV-35-LID-12-1	35 qt. Waste Container Lid	Champagne	$21.75
RV-35-LID-17-1	35 qt. Waste Container Lid	Metallic Silver	$21.75
RV-35-LID-18-1	35 qt. Waste Container Lid	Black	$21.75
RV-35-LID-G-1	35 qt. Waste Container Lid	Green	$21.75
RV-35-LID-13-1	35 qt. Waste Container Lid	Orion Gray	$21.75
RV-50-LID-1	50 qt. Waste Container Lid	White	$23.95
RV-50-LID-12-1	50 qt. Waste Container Lid	Champagne	$23.95
RV-50-LID-17-1	50 qt. Waste Container Lid	Metallic Silver	$23.95
RV-50-LID-G-1	50 qt. Waste Container Lid	Green	$23.95
RV-50-LID-13-1	50 qt. Waste Container Lid	Orion Gray	$23.95
RV-50-LID-18-1	50 qt. Waste Container Lid	Black	$23.95

Heavy-Duty Door Mount Kit

- Fits all RV Series Waste Containers, HPRV/HRV Hampers and 5CW2 Series Cookware Organizers
- Allows cabinet door to be installed easily
- Pre-assembled door mounting brackets
- 6-way adjustable bracket
- Includes a complete set of brackets, fasteners and spacers for installation
- Eliminates the need for a sub door panel

RV DM17 KIT

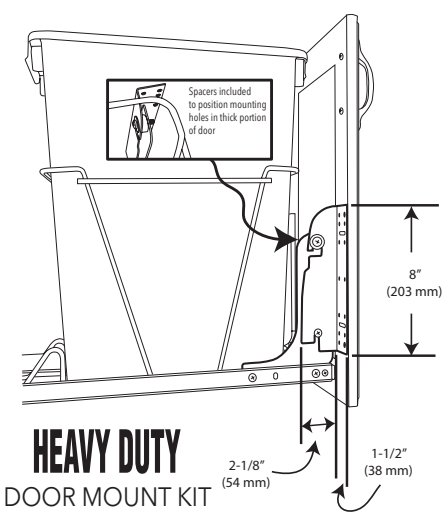

White finish available

Heavy Duty Door Mount Kit

PRODUCT	DESCRIPTION	FINISH	SLP
RV DM KIT	Heavy Duty Door Mount Kit	White	$39.15
RV DM17 KIT	Heavy Duty Door Mount Kit	Chrome	$39.15

5LB Series

LEGRABOX Bottom Mount

5LB-1835OGMP-213

NEW SIZES!

blum

- Designed for full access 12", 15", 18" and 24" base cabinets with 3/4" side panels
- Single 30, 35 and 50 qt. and double 35 and 50 qt. polymer containers, black or orion gray with (1) matching lid
- 5LB-2435OGWN-413 comes with double 35 qt. waste containers with (1) lid and (2) 8 L waste containers with (2) lids
- LEGRABOX frame, orion gray or stainless steel (9-1/2" F height)
- Full-extension, LEGRABOX slides with BLUM soft-close
- Top divider secures container(s), natural maple with semi-gloss finish, walnut with satin finish or painted black MDF
- Fully assembled, just add your door front
- Mounts to cabinet door and side walls
- LEGRABOX door-mount brackets
- TIP-ON or SERVO-DRIVE systems available (sold separately)
- TSCA Title VI Compliant

**Lid not available for 30 qt.*

Scan for video

NOTE: Depending on cabinet construction and pull hardware, a lid on the rear waste container may not fully function. See pg. 30 for replacement containers and pg. 32 for lids.

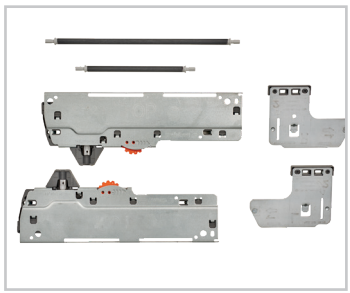

TIP-ON Kit available

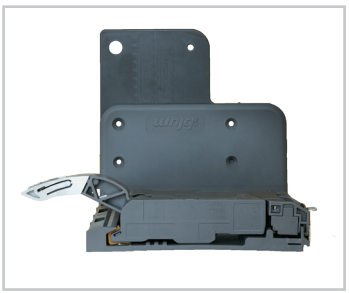

SERVO-DRIVE available

5LB-1230SSBL-118
Single 30 qt. Waste Container
(Stainless steel and black finish shown)

5LB-1550OGMP-113
Single 50 qt. Waste Container
(Orion gray and maple finish shown)

5LB-1850OGWN-213
Double 50 qt. Waste Container
(Orion gray and walnut finish shown)

5LB-2435OGWN-413
Double 35 qt & 8 L Waste Container
(Orion gray and walnut finish shown)

LEGRABOX Bottom Mount Waste Container Pullouts w/ Soft-Close

	PRODUCT	DESCRIPTION	DIMS	MCO	CAB	FINISH	SLP
*	5LB-1230OGMP-113	Single 30 qt.	10-1/2" (267 mm) W x 21-23/32" (552 mm) D x 19-19/32" (498 mm) H	10-1/2" (267 mm)	FLB12	Orion Gray/ Maple	$623.50
*	5LB-1230OGWN-113	Single 30 qt.	10-1/2" (267 mm) W x 21-23/32" (552 mm) D x 19-19/32" (498 mm) H	10-1/2" (267 mm)	FLB12	Orion Gray/ Walnut	$681.50
*	5LB-1230SSBL-118	Single 30 qt.	10-1/2" (267 mm) W x 21-23/32" (552 mm) D x 19-19/32" (498 mm) H	10-1/2" (267 mm)	FLB12	Stainless Steel/ Black	$710.50
	5LB-1535OGMP-113	Single 35 qt.	13-1/2" (343 mm) W x 21-23/32" (552 mm) D x 20-11/32" (517 mm) H	13-1/2" (343 mm)	FLB15	Orion Gray/ Maple	$623.50
	5LB-1535OGWN-113	Single 35 qt.	13-1/2" (343 mm) W x 21-23/32" (552 mm) D x 20-11/32" (517 mm) H	13-1/2" (343 mm)	FLB15	Orion Gray/ Walnut	$681.50
	5LB-1535SSBL-118	Single 35 qt.	13-1/2" (343 mm) W x 21-23/32" (552 mm) D x 20-11/32" (517 mm) H	13-1/2" (343 mm)	FLB15	Stainless Steel/ Black	$739.50
	5LB-1550OGMP-113	Single 50 qt.	13-1/2" (343 mm) W x 21-23/32" (552 mm) D x 24-7/32" (616 mm) H	13-1/2" (343 mm)	FLFHB15	Orion Gray/ Maple	$594.50
	5LB-1550OGWN-113	Single 50 qt.	13-1/2" (343 mm) W x 21-23/32" (552 mm) D x 24-7/32" (616 mm) H	13-1/2" (343 mm)	FLFHB15	Orion Gray/ Walnut	$623.50
	5LB-1550SSBL-118	Single 50 qt.	13-1/2" (343 mm) W x 21-23/32" (552 mm) D x 24-7/32" (616 mm) H	13-1/2" (343 mm)	FLFHB15	Stainless Steel/ Black	$710.50
	5LB-1835OGMP-213	Double 35 qt.	16-1/2" (420 mm) W x 21-23/32" (552 mm) D x 20-11/32" (517 mm) H	16-1/2" (419 mm)	FLB18	Orion Gray/ Maple	$580.00
	5LB-1835OGWN-213	Double 35 qt.	16-1/2" (420 mm) W x 21-23/32" (552 mm) D x 20-11/32" (517 mm) H	16-1/2" (419 mm)	FLB18	Orion Gray/ Walnut	$638.00
	5LB-1835SSBL-218	Double 35 qt.	16-1/2" (420 mm) W x 21-23/32" (552 mm) D x 20-11/32" (517 mm) H	16-1/2" (419 mm)	FLB18	Stainless Steel/ Black	$739.50
	5LB-1850OGMP-213	Double 50 qt.	16-1/2" (420 mm) W x 21-23/32" (552 mm) D x 24-7/32" (616 mm) H	16-1/2" (419 mm)	FLFHB18	Orion Gray/ Maple	$594.50
	5LB-1850OGWN-213	Double 50 qt.	16-1/2" (420 mm) W x 21-23/32" (552 mm) D x 24-7/32" (616 mm) H	16-1/2" (419 mm)	FLFHB18	Orion Gray/ Walnut	$667.00
	5LB-1850SSBL-218	Double 50 qt.	16-1/2" (420 mm) W x 21-23/32" (552 mm) D x 24-7/32" (616 mm) H	16-1/2" (419 mm)	FLFHB18	Stainless Steel/ Black	$754.00
	5LB-2435OGWN-413	Dbl 35 qt. & Dbl 8 L	22-1/2" (572 mm) W x 21-23/32" (552 mm) D x 20-11/32" (517 mm) H	22-1/2" (572 mm)	FLB24	Orion Gray/ Walnut	$828.10

LEGRABOX TIP-ON Kit for Full Access

5LB-TOKIT-12	Kit for 12"	3-1/2" (89 mm) W x 9" (229 mm) D x 1-3/4" (45 mm) H	$72.50
5LB-TOKIT-15	Kit for 15"	3-1/2" (89 mm) W x 9" (229 mm) D x 1-3/4" (45 mm) H	$78.30
5LB-TOKIT-18	Kit for 18"	3-1/2" (89 mm) W x 9" (229 mm) D x 1-3/4" (45 mm) H	$81.20

LEGRABOX SERVO-DRIVE Kit

5LBSD-KIT-1	SERVO-Drive Kit for 5LB	$623.50

** Lid not available for 30 qt.*

TWCS* Series

TANDEMBOX Bottom Mount

- Designed for 15", 18" and 21" base cabinets
- Single and double 35 and 50 qt. polymer containers, available in white
- Full-extension, undermount slides w/ BLUM soft-close
- Pre-assembled TANDEMBOX frame
- Wood insert secures container(s), available in painted white MDF
- Mounts to cabinet floor
- Built-in door-mount brackets
- Rear storage with all single units
- 35 and 50 qt. polymer lids available (sold separately)
- TSCA Title VI compliant

TWCSC-18DM-2

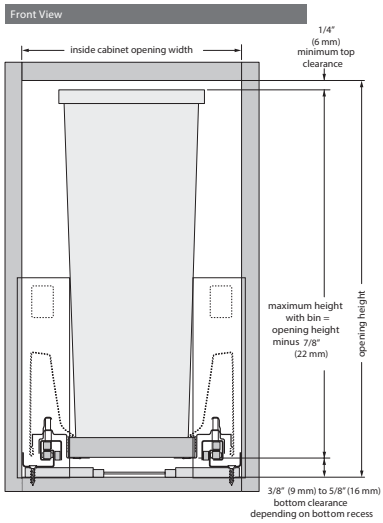

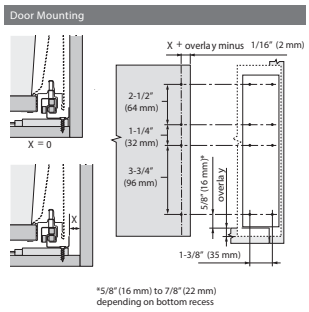

Minimum inside cabinet depth

With SERVO-DRIVE	22-5/8"	(574 mm)
Without SERVO-DRIVE	22-1/2"	(569 mm)

TANDEMBOX Bottom Mount Waste Container Pullouts w/ BLUM Soft-Close

PRODUCT	DESCRIPTION	DIMS	MCOFL	MCOFF	CAB	FINISH	SLP
TWCSC-15DM-1	Single 35 qt.	12-1/2" (318 mm) W x 22-1/2" (572 mm) D x 19" (483 mm) H	12" (305 mm)	12-3/4" (324 mm)	B15	White	$638.00
TWCSC-1550DM-1	Single 50 qt.	12-1/2" (318 mm) W x 22-1/2" (572 mm) D x 23" (585 mm) H	12" (305 mm)	12-3/4" (324 mm)	FHB15	White	$652.50
TWCSC-18DM-2	Double 35 qt.	15-1/2" (394 mm) W x 22-1/2" (572 mm) D x 19" (483 mm) H	15" (381 mm)	15-3/4" (400 mm)	B18	White	$652.50
TWCSC-21DM-2	Double 35 qt.	18-1/2" (470 mm) W x 22-1/2" (572 mm) D x 19" (483 mm) H	18" (457 mm)	18-3/4" (476 mm)	B21	White	$681.50
TWCSC-1850DM-2	Double 50 qt.	15-1/2" (394 mm) W x 22-1/2" (572 mm) D x 23" (585 mm) H	15" (381 mm)	15-3/4" (400 mm)	FHB18	White	$667.00
TWCSC-2150DM-2	Double 50 qt.	18-1/2" (470 mm) W x 22-1/2" (572 mm) D x 23" (585 mm) H	18" (457 mm)	18-3/4" (476 mm)	FHB21	White	$696.00
TANDEMBOX Bottom Mount Electric Assist Waste Container Pullouts w/ Soft-Close and SERVO-DRIVE							
TWCSD-15DM-1	Single 35 qt.	12-1/2" (318 mm) W x 22-5/8" (575 mm) D x 19" (483 mm) H	12" (305 mm)	12-3/4" (324 mm)	B15	White	$1,319.50
TWCSD-1550DM-1	Single 50 qt.	12-1/2" (318 mm) W x 22-5/8" (575 mm) D x 23" (585 mm) H	12" (305 mm)	12-3/4" (324 mm)	FHB15	White	$1,334.00
TWCSD-18DM-2	Double 35 qt.	15-1/2" (394 mm) W x 22-5/8" (575 mm) D x 19" (483 mm) H	15" (381 mm)	15-3/4" (400 mm)	B18	White	$1,348.50
TWCSD-21DM-2	Double 35 qt.	18-1/2" (470 mm) W x 22-5/8" (575 mm) D x 19" (483 mm) H	18" (457 mm)	18-3/4" (476 mm)	B21	White	$1,377.50
TWCSD-1850DM-2	Double 50 qt.	15-1/2" (394 mm) W x 22-5/8" (575 mm) D x 23" (585 mm) H	15" (381 mm)	15-3/4" (400 mm)	FHB18	White	$1,363.00
TWCSD-2150DM-2	Double 50 qt.	18-1/2" (470 mm) W x 22-5/8" (575 mm) D x 23" (585 mm) H	18" (457 mm)	18-3/4" (476 mm)	FHB21	White	$1,392.00

Aluminum Bottom Mount Rev-A-Motion®

5149 Series

5149-18DM-217

- Designed for 15", 18" and 21" base cabinets
- Single 35 and 50 qt. and double 27, 35 and 50 qt. polymer containers, metallic silver or white
- Patented anodized aluminum frame, metallic silver or white base (US Patent No. 9,049,930)
- Full-extension with 1-1/2" over-travel, ball-bearing slides w/ Rev-A-Motion® soft-open/soft-close (US Patent No. 8,091,971)
- Rear storage with all single units
- Mounts to cabinet door and floor
- Patented door-mount brackets with 5" of adjustability (US Patent No. 8,939,526)
- 35 and 50 qt. polymer lids available (sold separately)

5149-1527DM-211
Double 27 qt. Waste Container
(White/aluminum finish shown)

5149-15DM18-117
Single 35 qt. Reduced Depth Waste Container
(White/aluminum finish shown)

Patented door-mount brackets
(US Patent No. 8,939,526)

NOTE: Depending on cabinet construction and pull hardware, a lid on the rear waste container may not fully function. See pg. 30 for replacement containers and pg. 32 for lids.

REV-A-MOTION

* Reduced depth

Aluminum Bottom Mount Rev-A-Motion® Waste Container Pullouts

PRODUCT	DESCRIPTION	DIMS	MCOFL	MCOFF	CAB	FINISH	SLP
5149-15DM-111	Single 35 qt.	12-1/8" (309 mm) W x 22" (559 mm) D x 19-1/2" (496 mm) H	12-1/4" (311 mm)	11-1/2" (292 mm)	B15	White/Alum	$413.25
5149-15DM-117	Single 35 qt.	12-1/8" (309 mm) W x 22" (559 mm) D x 19-1/2" (496 mm) H	12-1/4" (311 mm)	11-1/2" (292 mm)	B15	Silver/Alum	$413.25
5149-15DM18-111	Single 35 qt.*	12-1/8" (309 mm) W x 16" (407 mm) D x 19-1/2" (496 mm) H	12-1/4" (311 mm)	11-1/2" (292 mm)	B15	White/Alum	$408.90
5149-15DM18-117	Single 35 qt.*	12-1/8" (309 mm) W x 16" (407 mm) D x 19-1/2" (496 mm) H	12-1/4" (311 mm)	11-1/2" (292 mm)	B15	Silver/Alum	$408.90
5149-1550DM-111	Single 50 qt.	12-1/8" (309 mm) W x 22" (559 mm) D x 23-1/2" (597 mm) H	12-1/4" (311 mm)	11-1/2" (292 mm)	FHB15	White/Alum	$432.10
5149-1550DM-117	Single 50 qt.	12-1/8" (309 mm) W x 22" (559 mm) D x 23-1/2" (597 mm) H	12-1/4" (311 mm)	11-1/2" (292 mm)	FHB15	Silver/Alum	$432.10
5149-1527DM-211	Double 27 qt.	12-1/8" (309 mm) W x 22" (559 mm) D x 19-13/16" (504 mm) H	12-1/4" (311 mm)	11-1/2" (292 mm)	B15	White/Aum	$432.10
5149-1527DM-217	Double 27 qt.	12-1/8" (309 mm) W x 22" (559 mm) D x 19-13/16" (504 mm) H	12-1/4" (311 mm)	11-1/2" (292 mm)	B15	Silver/Aum	$432.10
5149-18DM-211	Double 35 qt.	14-9/32" (363 mm) W x 22" (559 mm) D x 19-1/2" (496 mm) H	14-1/2" (368 mm)	14-1/2" (368 mm)	B18	White/Alum	$433.55
5149-18DM-217	Double 35 qt.	14-9/32" (363 mm) W x 22" (559 mm) D x 19-1/2" (496 mm) H	14-1/2" (368 mm)	14-1/2" (368 mm)	B18	Silver/Alum	$432.85
5149-2150DM-211	Double 50 qt.	15-19/32" (396 mm) W x 22" (559 mm) D x 23-1/2" (597 mm) H	15-3/4" (400 mm)	15-3/4" (400 mm)	FHB21	White/Alum	$451.70
5149-2150DM-217	Double 50 qt.	15-19/32" (396 mm) W x 22" (559 mm) D x 23-1/2" (597 mm) H	15-3/4" (400 mm)	15-3/4" (400 mm)	FHB21	Silver/Alum	$450.20

5349 Series

Aluminum Bottom Mount

5349-18DM-217

- Designed for 15" and 18" base cabinets
- Single 35 and 50 qt. and double 27, 35 and 50 qt. polymer containers, metallic silver or white
- 10" high door-mountable aluminum frame
- Full-extension with 1-1/2" over-travel slides w/ soft-close
- Rear storage with all single units
- Mounts to cabinet door and floor
- Compo+ US Patent Nos.: 8,978,917/ 9,309,049/ 9,669,995
- Built-in door-mount brackets
- 35 and 50 qt. polymer lids available (sold separately)

Door-Mount Extension Bracket

- Designed for our 5349 Aluminum Bottom Mount Series
- Extension brackets attach to the existing door brackets
- Eliminates need for a sub door
- Allow adjustment from 3/4" - 2-1/2" per side

NOTE: Depending on cabinet construction and pull hardware, a lid on the rear waste container may not fully function. See pg. 30 for replacement containers and pg. 32 for lids.

5349-15DM-1
Single 35 qt. Waste Container
(White/aluminum finish shown)

5349-1527DM-217
Double 27 qt. Waste Container
(Metallic Silver/aluminum finish shown)

HOLE SPREAD DIMENSIONS

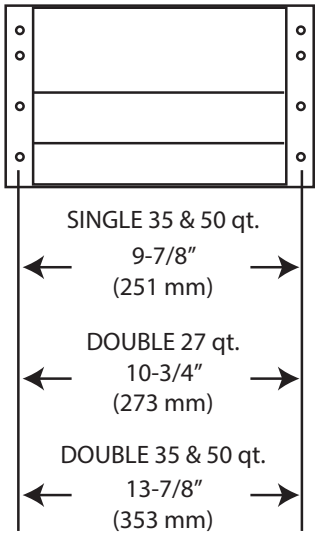

5349-18CKWH-2
Single Compost and Single 35 qt. Waste Container
(White/white/aluminum finish shown)
See pg. 30 for more information

Odor reducing mechanism that opens when the lid is raised and seals when the lid is closed

5349-1550DM-117
Single 50 qt. Waste Container
(Silver/aluminum finish shown)

* Reduced depth
** select "BK" for black, "GR" for green,"OG" for orion gray, "WH" for white

Aluminum Bottom Mount Waste Container Pullouts w/ Soft-Close

PRODUCT	DESCRIPTION	DIMS	MCO	CAB	FINISH	SLP
5349-15DM-1	Single 35 qt.	10-3/4" (274 mm) W x 21-7/8" (557 mm) D x 19-1/32" (484 mm) H	11" (279 mm)	B15	White/Alum	$437.90
5349-15DM18-1	Single 35 qt.	10-3/4" (274 mm) W x 18" (458 mm) D x 19-1/32" (484 mm) H	11" (279 mm)	B15	White/Alum	$424.15
5349-15DM-117	Single 35 qt.	10-3/4" (274 mm) W x 21-7/8" (557 mm) D x 19-1/32" (484 mm) H	11" (279 mm)	B15	Silver/Alum	$437.90
5349-15DM18-117	Single 35 qt.	10-3/4" (274 mm) W x 18" (458 mm) D x 19-1/32" (484 mm) H	11" (279 mm)	B15	Silver/Alum	$424.15
5349-1550DM-1	Single 50 qt.	10-3/4" (274 mm) W x 21-7/8" (557 mm) D x 22-29/32" (583 mm) H	11" (279 mm)	FHB15	White/Alum	$471.25
5349-1550DM-117	Single 50 qt.	10-3/4" (274 mm) W x 21-7/8" (557 mm) D x 22-29/32" (583 mm) H	11" (279 mm)	FHB15	Silver/Alum	$471.25
5349-1527DM-2	Double 27 qt.	11-11/16" (297 mm) W x 22-7/32" (565 mm) D x 18-29/32" (481 mm) H	12" (305 mm)	B15	White/Alum	$477.05
5349-1527DM-217	Double 27 qt.	11-11/16" (297 mm) W x 22-7/32" (565 mm) D x 18-29/32" (481 mm) H	12" (305 mm)	B15	Silver/Alum	$477.05
5349-18DM-2	Double 35 qt.	14-25/32" (376 mm) W x 22-3/32" (562 mm) D x 19-1/32" (484 mm) H	15" (381 mm)	B18	White/Alum	$475.60
5349-18DM-217	Double 35 qt.	14-25/32" (376 mm) W x 22-3/32" (562 mm) D x 19-1/32" (484 mm) H	15" (381 mm)	B18	Silver/Alum	$475.60
5349-2150DM-2	Double 50 qt.	14-25/32" (376 mm) W x 22-3/32" (562 mm) D x 22-29/32" (583 mm) H	15" (381 mm)	FHB18	White/Alum	$515.60
5349-2150DM-217	Double 50 qt.	14-25/32" (376 mm) W x 22-3/32" (562 mm) D x 22-29/32" (583 mm) H	15" (381 mm)	FHB18	Silver/Alum	$515.60
Aluminum Bottom Mount Compost Pullouts w/ Soft-Close						
5349-15CK**-1	Single Compo+ Bin	10-13/16" (275 mm) W x 18" (457 mm) D x 18-1/16" (459 mm) H	12" (305 mm)	B15	**/Alum	$461.85
5349-18CK**-2	Compo+ Bin w/ 35 qt. Container	14-13/16" (376 mm) W x 22-1/8" (562 mm) D x 19-1/16" (484 mm) H	15" (381 mm)	B18	**/White/Alum	$482.85
Accessories						
5345-DM-KIT-1	Door Mount Extension Brackets				Chrome	$39.15
CP-BAGROLL-1	Replacement Compost Bags (1 Roll, 12 Bags)					$11.60
CP-FILTER-1	Replacement Charcoal Filter (2)					$14.50
CK-1117-**-1	Replacement Compo+ Bin					$68.15

53WC Series

Steel Bottom Mount

53WC-1535SCDM-113

- Designed for 15" and 18" base cabinets
- Single 35 and 50 qt. and double 27, 35 and 50 qt. polymer containers, available in orion gray, champagne or metallic silver
- Full-extension, progressive roller slides w/ soft-close
- Powder-coated wire frame
- Mounts to cabinet floor
- Pre-assembled door-mount brackets
- Rear storage bin with all single units
- 35 and 50 qt. polymer lids available (sold separately)

NOTE: Depending on cabinet construction and pull hardware, a lid on the rear waste container may not fully function. See pg. 30 for replacement containers and pg. 32 for lids.

Full-extension, progressive roller, 90 lb. rated, concealed slides with soft-close

Pre-assembled door-mount brackets

53WC-1535SCDM-112
Single 35 qt. Waste Container
(Champagne finish shown)

53WC-1550SCDM-117
Single 50 qt. Waste Container
(Metallic Silver finish shown)

53WC-1527SCDM-213
Double 27 qt. Waste Container
(Orion Gray finish shown)

53WC-1835SCDM-212
Double 35 qt. Waste Container
(Champagne finish shown)

53WC-2150SCDM-217
Double 50 qt. Waste Container
(Metallic Silver finish shown)

Steel Bottom Mount Waste Container Pullouts w/ Soft-Close Slides

PRODUCT	DESCRIPTION	DIMS	MCO	CAB	FINISH	SLP
53WC-1535SCDM-113	Single 35 qt.	10-7/8" (277 mm) W x 22-3/32" (562 mm) D x 19" (483 mm) H	11-1/2" (292 mm)	B15	Orion Gray	$298.70
53WC-1535SCDM-112	Single 35 qt.	10-7/8" (277 mm) W x 22-3/32" (562 mm) D x 19" (483 mm) H	11-1/2" (292 mm)	B15	Champagne	$298.70
53WC-1535SCDM-117	Single 35 qt.	10-7/8" (277 mm) W x 22-3/32" (562 mm) D x 19" (483 mm) H	11-1/2" (292 mm)	B15	Metallic Silver	$298.70
53WC-1550SCDM-113	Single 50 qt.	10-7/8" (277 mm) W x 22-3/32" (562 mm) D x 22-29/32" (582 mm) H	11-1/2" (292 mm)	FHB15	Orion Gray	$301.60
53WC-1550SCDM-112	Single 50 qt.	10-7/8" (277 mm) W x 22-3/32" (562 mm) D x 22-29/32" (582 mm) H	11-1/2" (292 mm)	FHB15	Champagne	$301.60
53WC-1550SCDM-117	Single 50 qt.	10-7/8" (277 mm) W x 22-3/32" (562 mm) D x 22-29/32" (582 mm) H	11-1/2" (292 mm)	FHB15	Metallic Silver	$301.60
53WC-1527SCDM-213	Double 27 qt.	11-1/4" (287 mm) W x 22-3/32" (562 mm) D x 18-15/16" (482 mm) H	11-1/2" (292 mm)	B15	Orion Gray	$304.50
53WC-1527SCDM-212	Double 27 qt.	11-1/4" (287 mm) W x 22-3/32" (562 mm) D x 18-15/16" (482 mm) H	11-1/2" (292 mm)	B15	Champagne	$304.50
53WC-1527SCDM-217	Double 27 qt.	11-1/4" (287 mm) W x 22-3/32" (562 mm) D x 18-15/16" (482 mm) H	11-1/2" (292 mm)	B15	Metallic Silver	$304.50
53WC-1835SCDM-213	Double 35 qt.	14-3/8" (366 mm) W x 22-3/32" (562 mm) D x 19" (483 mm) H	14-1/2" (368 mm)	B18	Orion Gray	$301.60
53WC-1835SCDM-212	Double 35 qt.	14-3/8" (366 mm) W x 22-3/32" (562 mm) D x 19" (483 mm) H	14-1/2" (368 mm)	B18	Champagne	$301.60
53WC-1835SCDM-217	Double 35 qt.	14-3/8" (366 mm) W x 22-3/32" (562 mm) D x 19" (483 mm) H	14-1/2" (368 mm)	B18	Metallic Silver	$301.60
53WC-2150SCDM-213	Double 50 qt.	14-3/4" (375 mm) W x 22-3/32" (562 mm) D x 22-29/32" (582 mm) H	15" (381 mm)	FHB18	Orion Gray	$306.70
53WC-2150SCDM-212	Double 50 qt.	14-3/4" (375 mm) W x 22-3/32" (562 mm) D x 22-29/32" (582 mm) H	15" (381 mm)	FHB18	Champagne	$306.70
53WC-2150SCDM-217	Double 50 qt.	14-3/4" (375 mm) W x 22-3/32" (562 mm) D x 22-29/32" (582 mm) H	15" (381 mm)	FHB18	Metallic Silver	$306.70

53TM Series

Steel Top Mount

53TM-24GSCDM4-FL

- Designed for full access 18" and 24" base cabinets with 5/8" or 3/4" side walls
- (4) configurations available:
  - Double 35 qt. polymer containers, metallic silver
  - Double 50 qt. polymer containers, metallic silver
  - Double 35 qt. and double 8 L polymer containers, metallic silver
  - Single 35 qt. and double 8 L polymer containers, metallic silver
- Powder-coated metal frame, metallic silver
- Full-extension with 1-1/2" over-travel, Grass slides w/ soft-close
- Mounts to cabinet door and side walls
- Pre-assembled door-mount brackets
- Built-in metal lid
- (1) green and (1) white 8 L lids

Scan for video

53TM-24GSCDM4-FL
Double 35 qt. and Double 8 L Waste Container

53TM-1850GSCDM2-FL
Double 50 qt. Waste Container

Built-in metal lid

Full Access Steel Top Mount Waste and Recycle Center Pullout w/ Soft-Close

PRODUCT	DESCRIPTION	DIMS	MCO	CAB	FIN-ISH	SLP
53TM-1835GSCDM2-FL	Double 35 qt.	16-7/32 - 16-27/32" (412 - 428 mm) W x 21-21/32" (550 mm) D x 18-13/16" (478 mm) H	16-7/32" (412 mm)	FLB18	Steel	$474.15
53TM-1850GSCDM2-FL	Double 50 qt.	16-7/32 - 16-27/32" (412 - 428 mm) W x 21-21/32" (550 mm) D x 22-19/32" (574 mm) H	16-7/32" (412 mm)	FLFHB18	Steel	$482.85
53TM-18GSCDM3-FL	Sgl. 35 qt. and Dbl. 8 L	16-7/32 - 16-27/32" (412 - 428 mm) W x 21-21/32" (550 mm) D x 18-13/16" (478 mm) H	16-7/32" (412 mm)	FLB18	Steel	$465.45
53TM-24GSCDM4-FL	Dbl. 35 qt. and Dbl. 8 L	22-1/8 - 22-3/4" (563 - 579 mm) W x 21-21/32" (550 mm) D x 18-13/16" (478 mm) H	22-1/8" (562 mm)	FLFHB24	Steel	$495.20

Recycle Center

5BBSC Series

5BBSC-WMDM24-C

- Designed for 24″ base cabinets
- (1) machine washable canvas bag and (3) 25 qt. polymer bins, available in all white or (1) yellow, green and blue each
- Chrome wire frame
- Full-extension with 1-1/2″ over-travel, ball-bearing slides w/ soft-close
- Mounts to cabinet floor
- Built-in door-mount brackets

5BBSC-WMDM24-W
Triple 25 qt. w/ (1) Canvas Liner
(White finish shown)

5BBSC-WMDM24-C
Triple 25 qt. w/ (1) Canvas Liner
(Multi-color finish shown)

Recycle Center Bottom Mount Pullout w/ Soft-Close

PRODUCT	DESCRIPTION	DIMS	MCO	CAB	FINISH	SLP
5BBSC-WMDM24-C	Triple 25 qt. w/ (1) Canvas Liner	20″ (508 mm) W x 22-1/8″ (562 mm) D x 20-1/8″ (512 mm) H	20-1/4″ (514 mm) - FF 20-1/4″ (514 mm) - FL	B24	Multi/Chrome	$427.75
5BBSC-WMDM24-W	Triple 25 qt. w/ (1) Canvas Liner	20″ (508 mm) W x 22-1/8″ (562 mm) D x 20-1/8″ (512 mm) H	20-1/4″ (514 mm) - FF 20-1/4″ (514 mm) - FL	B24	White/Chrome	$427.75

4WC Series

Maple Bottom Mount

4WC-24DM2-SC

- Designed for 15", 18" and 24" base cabinets
- Single 35 qt. and double 30 and 35 qt. polymer containers, metallic silver or white
- Maple dovetail frame with semi-gloss finish
- (2) slide configurations available:
  - 35 qt. containers include full-extension with 1-1/2" over-travel, ball-bearing slides
  - 30 qt. containers include full-extension with 3/4" over-travel undermount slides w/ BLUM soft-close
- Rear storage with single 35 qt. and double 30 qt. units
- Mounts to cabinet door and floor
- Pre-assembled door-mount brackets
- 35 and 50 qt. polymer lids available (sold separately)
- TSCA Title VI compliant

NOTE: Depending on cabinet construction and pull hardware, a lid on the rear waste container may not fully function. See pg. 30 for replacement containers and pg. 32 for lids.

4WC-15DM1
Single 35 qt. Waste Container
(White/maple shown)

4WC-18DM2
Double 35 qt. Waste Container
(White/maple shown)

Maple Bottom Mount Waste Container Pullouts w/ BLUM Soft-Close

PRODUCT	DESCRIPTION	DIMS	MCO	CAB	FINISH	SLP
4WC-24DM2-SC	Double 30 qt.	20-31/32" (533 mm) W x 22-3/8" (569 mm) D x 19-5/8" (499 mm) H	20-1/2" (521 mm) - FF 21" (533 mm) - FL	B24	Silver/Maple	$524.15
Maple Bottom Mount Waste Container Pullouts w/ Ball-Bearing Slide						
4WC-15DM1	Single 35 qt.	11-1/4" (286 mm) W x 21-21/32" (550 mm) D x 19-1/4" (489 mm) H	11-1/2" (292 mm) - FF 11-1/2" (292 mm) - FL	B15	White/Maple	$317.55
4WC-18DM2	Double 35 qt.	14-1/4" (362 mm) W x 21-21/32" (550 mm) D x 19-1/4" (489 mm) H	14-1/2" (368 mm) - FF 14-1/2" (368 mm) - FL	B18	White/Maple	$332.05

Walnut Bottom Mount

4WC-WN Series

4WC-WN-18DM2-SC

- Designed for 15", 18" and 21" base cabinets
- Single and double 35 and 50 qt. polymer containers, orion gray
- Walnut dovetail frame with satin finish (7-1/2" frame height)
- Full-extension with 3/4" over-travel undermount slides w/ BLUM soft-close
- Rear storage with all single units
- Mounts to cabinet door and floor
- Pre-assembled door-mount brackets
- (1) matching lid
- TIP-ON technology available (sold separately)
- TSCA Title VI compliant

4WC-WN-15DM1-SC
Single 35 qt. Waste Container

Walnut dovetail construction

Pre-assembled door mount brackets

NOTE: Single 35 and 50 qt. face frame minimum opening is less than the product width. Single unit hardware extends past bottom-mount bracket. Depending on cabinet construction and pull hardware, a lid on the rear waste container may not fully function. See pg. 30 for replacement containers and pg. 32 for lids.

Walnut Bottom Mount MOVENTO Waste Container Pullouts w/ Soft-Close and (1) Lid

PRODUCT	DESCRIPTION	DIMS	MCO	CAB	FINISH	SLP
4WC-WN-15DM1-SC	Single 35 qt.	12" (305 mm) W x 22-3/16" (564 mm) D x 19-7/16" (494 mm) H	12" (305 mm)	B15	Orion Gray/Walnut	$594.50
4WC-WN-1550DM1-SC	Single 50 qt.	12" (305 mm) W x 22-3/16" (564 mm) D x 23-3/8" (594 mm) H	12" (305 mm)	FHB15	Orion Gray/Walnut	$623.50
4WC-WN-18DM2-SC	Double 35 qt.	15" (381 mm) W x 22-3/16" (564 mm) D x 19-7/16" (494 mm) H	15" (381 mm)	B18	Orion Gray/Walnut	$638.00
4WC-WN-2150DM2-SC	Double 50 qt.	16" (407 mm) W x 22-3/16" (564 mm) D x 23-3/8" (594 mm) H	18" (457 mm)	FHB21	Orion Gray/Walnut	$667.00
TIP-ON Kit						
4WC-TOKIT-12	12" TIP-ON Kit	3-1/2" (89 mm) W x 9" (229 mm) D x 1-3/4" (45 mm) H				$72.50
4WC-TOKIT-15	15" TIP-ON Kit	3-1/2" (89 mm) W x 9" (229 mm) D x 1-3/4" (45 mm) H				$75.40
4WC-TOKIT-18	18" TIP-ON Kit	3-1/2" (89 mm) W x 9" (229 mm) D x 1-3/4" (45 mm) H				$78.30

4WCBM Series

Maple Bottom Mount w/ Rev-A-Motion™

4WCBM-2430DM-2

- Designed for 15", 18", 21" and 24" base cabinets
- Single 35 and 50 qt. and double 30, 35 and 50 qt. polymer containers, metallic silver
- Natural maple dovetail frame with semi-gloss finish (7-1/2" frame height)
- Full-extension with 1-1/2" over-travel, ball-bearing, 150 lb. rated, concealed slides w/ Rev-A-Motion® soft-open/soft-close assist (US Patent No. 8,091,971)
- Rear storage with all single and double 30 qt. units
- Mounts to cabinet door and floor
- Pre-assembled door-mount brackets
- 35 and 50 qt. polymer lids available (sold separately)
- TSCA Title VI compliant

NOTE: Single 35 and 50 qt. face frame minimum opening is less than the product width. Single unit hardware extends past bottom mount bracket. Depending on cabinet construction and pull hardware, a lid on the rear waste container may not fully function. See pg. 30 for replacement containers and pg. 32 for lids.

4WCBM-15DM-1
Single 35 qt. Waste Container
(Silver/maple finish shown)

4WCBM-1550DM-1
Single 50 qt. Waste Container
(Silver/maple finish shown)

4WCBM-2430DM-2
Double 30 qt. Waste Container
(Silver/maple finish shown)

4WCBM-2150DM-2
Double 50 qt. Waste Container
(Silver/maple finish shown)

Fully concealed undermount design

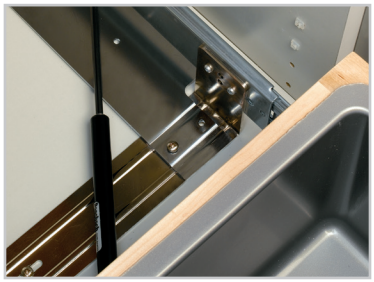

Rev-A-Motion® soft-close piston

Maple dovetail construction

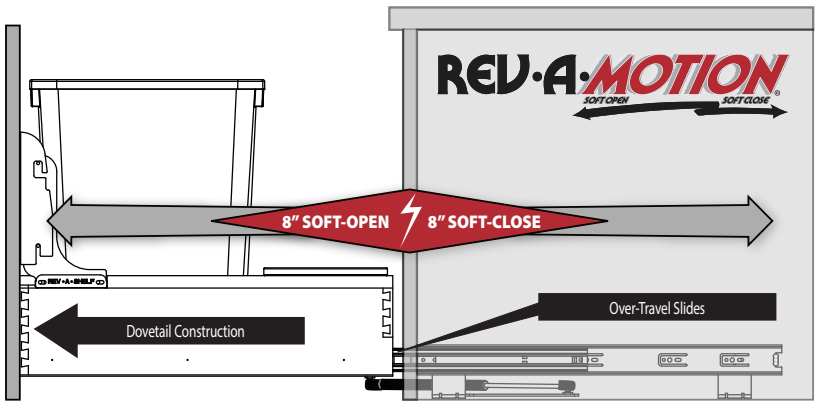

Maple Bottom Mount Waste Container Pullouts w/ Rev-A-Motion®

PRODUCT	DESCRIPTION	DIMS	MCOFL	MCOFF	CAB	FINISH	SLP
4WCBM-15DM-1	Single 35 qt.	12" (305 mm) W x 21-3/4" (553 mm) D x 19-1/4" (489 mm) H	12-3/4" (324 mm)	11-1/2" (293 mm)	B15	Silver/Maple	$471.25
4WCBM-1550DM-1	Single 50 qt.	12" (305 mm) W x 21-3/4" (553 mm) D x 23-3/16" (590 mm) H	12-3/4" (324 mm)	11-1/2" (293 mm)	FHB15	Silver/Maple	$478.50
4WCBM-2430DM-2	Double 30 qt.	20-1/4" (515 mm) W x 21-3/4" (553 mm) D x 19-13/32" (493 mm) H	20-1/2" (520 mm)	20-1/2" (520 mm)	B24	Silver/Maple	$581.45
4WCBM-18DM-2	Double 35 qt.	14-1/4" (362 mm) W x 21-3/4" (553 mm) D x 19-1/4" (489 mm) H	14-1/2" (368 mm)	14-1/2" (368 mm)	B18	Silver/Maple	$487.20
4WCBM-2150DM-2	Double 50 qt.	17-1/4" (439 mm) W x 21-3/4" (553 mm) D x 23-3/16" (590 mm) H	17-1/2" (445 mm)	17-1/2" (445 mm)	FHB21	Silver/Maple	$536.50

4WCSC/D Series

Maple Bottom Mount

4WCSC-2432DM-2

- Designed for 15", 18", 21" and 24" base cabinets
- Single 32, 35, and 50 qt. and double 27, 32, 35 and 50 qt. polymer containers, gray (32 qt. only) or metallic silver
- Natural maple dovetail frame with semi-gloss finish
- Full-extension with 3/4" over-travel, undermount slides w/ BLUM soft-close
- Available with BLUM SERVO-DRIVE technology, uses standard 110V wall socket
- Rear storage with all single 35 and 50 qt. units
- Mounts to cabinet door and floor
- Patented door-mount brackets with 5" of adjustability and micro-trim adjuster (US Patent No. 8,388,076)
- TIP-ON technology available (sold separately)
- 35 and 50 qt. polymer lids available (sold separately)
- Compo+ US Patent Nos.: 8,978,917/ 9,309,049/ 9,669,995
- TSCA Title VI compliant

TOOL FREE ADJUSTMENT! ALSO AVAILABLE WITH TIP-ON OR SERVO-DRIVE TECHNOLOGY

Height adjustment- Max 1/8" lift

Side-to-side adjustment- Max-1/16"

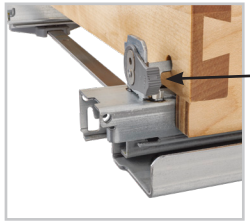

Tilt/skew adjustment for top of door

Curved design hugs the waste bin keeping it securely in place

NOTE: Depending on cabinet construction and pull hardware, a lid on the rear waste container may not fully function. See pg. 30 for replacement containers and pg. 32 for lids.

4WCSC/D-1535DM-1
Single 35 qt. Waste Container
(Silver/maple finish shown)

4WCSC-1535DM19-1
Single 35 qt. Waste Container, Reduced Depth
(Silver/maple finish shown)

4WCSC-1532DM16-1
Single 32 qt. Waste Container, Reduced Depth
(Gray/maple finish shown)

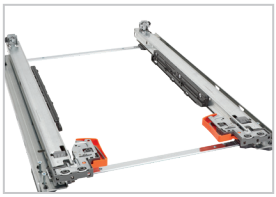

BLUM concealed soft-close slides

SERVO-DRIVE touch-to-open technology (sold separately)

4WCSC/D-1835DM-2
Double 35 qt. Waste Container
(Silver/maple finish shown)

Odor reducing mechanism that opens when the lid is raised and seals when the lid is closed

4WCSC-1835CKGR-2
Compost Bin w/ Single 35 qt. Waste Container
(Green/white and maple finish shown)
See pg. 30 for more information

** select "BK" for black, "GR" for green,"OG" for orion gray, "WH" for white

Maple Bottom Mount Waste Container Pullouts w/ BLUM Soft-Close

PRODUCT	DESCRIPTION	DIMS	MCO	CAB	FINISH	SLP
4WCSC-1532DM16-1	Single 32 qt. w/ TANDEM Slide	11-7/8" (302 mm) W x 15-21/32" (399 mm) D x 19-3/8" (493 mm) H	11-1/2" (292 mm) - FF 12" (305 mm) - FL	B15	Gray/Maple	$378.45
4WCSC-1535DM19-1	Single 35 qt. w/ TANDEM Slide	12" (229 - 305 mm) W x 18-21/32" (474 mm) D x 19-1/2" (496 mm) H	12" (305 mm)	B15	Silver/Maple	$413.25
4WCSC-1535DM-1	Single 35 qt.	12" (305 mm) W x 21-21/32" (551 mm) D x 19-1/2" (496 mm) H	12" (305 mm)	B15	Silver/Maple	$488.65
4WCSC-1550DM-1	Single 50 qt.	12" (305 mm) W x 21-3/4" (553 mm) D x 23-3/8" (594 mm) H	12" (305 mm)	FHB15	Silver/Maple	$500.25
4WCSC-1527DM-2	Double 27 qt.	12" (305 mm) W x 22-1/8" (563 mm) D x 19-11/32" (491 mm) H	12" (305 mm)	B15	Silver/Maple	$493.00
4WCSC-1835DM-2	Double 35 qt.	15" (381 mm) W x 22-1/32" (560 mm) D x 20-3/8" (518 mm) H	15" (381 mm)	B18	Silver/Maple	$543.75
4WCSC-1835DMND-2	Double 35 qt. for Inset	15" (381 mm) W x 22-1/32" (560 mm) D x 20-3/8" (518 mm) H	15" (381 mm)	B18	Silver/Maple	$500.25
4WCSC-2135DM-2	Double 35 qt.	18" (458 mm) W x 22-1/32" (560 mm) D x 20-5/16" (517 mm) H	18" (457 mm)	B21	Silver/Maple	$558.25
4WCSC-2150DM-2	Double 50 qt.	20-1/2" (521 mm) W x 22-1/32" (560 mm) D x 19-11/32" (491 mm) H	18" (457 mm)	FHB21	Silver/Wood	$591.15
4WCSC-2432DM-2	Double 32 qt.	20-1/2" (521 mm) W x 22-1/32" (560 mm) D x 19-11/32" (491 mm) H	21" (534 mm)	B24	Silver/Maple	$595.95
Maple Bottom Mount Electric Assist Waste Container Pullouts w/ Soft-Close and SERVO-DRIVE						
4WCSD-1535DM-1	Single 35 qt.	12" (305 mm) W x 22-1/2" (572 mm) D x 19-1/2" (496 mm) H	12" (305 mm)	B15	Silver/Maple	$1,203.50
4WCSD-1550DM-1	Single 50 qt.	12" (305 mm) W x 22-1/2" (572 mm) D x 23-3/8" (594 mm) H	12" (305 mm)	FHB15	Silver/Maple	$1,218.00
4WCSD-1835DM-2	Double 35 qt.	15" (381 mm) W x 22-1/2" (572 mm) D x 20-3/8" (518 mm) H	15" (381 mm)	B18	Silver/Maple	$1,290.50
4WCSD-2150DM-2	Double 50 qt.	18" (458 mm) W x 22-1/2" (572 mm) D x 24-1/4" (616 mm) H	18" (457 mm)	FHB21	Silver/Maple	$1,305.00
Maple Bottom Mount Compost Pullouts w/ BLUM Soft-Close						
4WCSC-CK**-1	Single Compo+ Bin	11-31/32" (305 mm) W x 18-15/32" (469 mm) D x 18-9/16" (472 mm) H	12" (305 mm)	B15	**/Maple	$477.05
4WCSC-1835CK**-2	Compo+ Bin w/ 35 qt.	15" (381 mm) W x 22" (559 mm) D x 19-1/4" (489 mm) H	15" (381 mm)	B18	**/White/Maple	$558.25
Accessories						
CP-BAGROLL-1	Replacement Compost+ Bags (1 Roll, 12 Bags)					$11.60
CP-FILTER-1	Replacement Charcoal Filter (2)					$14.50
CK-1117-**-1	Replacement Compo+ Bin	10-3/4" (274 mm) W x 13-29/32" (354 mm) D x 16-29/32" (430 mm) H				$68.15
4WC-TOKIT-12	12" TIP-ON Kit	3-1/2" (89 mm) W x 9" (229 mm) D x 1-3/4" (45 mm) H				$72.50
4WC-TOKIT-15	15" TIP-ON Kit	3-1/2" (89 mm) W x 9" (229 mm) D x 1-3/4" (45 mm) H				$75.40
4WC-TOKIT-18	18" TIP-ON Kit	3-1/2" (89 mm) W x 9" (229 mm) D x 1-3/4" (45 mm) H				$78.30

4VLWCSC Series

Value Line Waste Container

4VLWCSC-1527DM-2

- Designed for 15", 18", 21" and 24" base cabinets
- Single 35 and 50 qt. and double 27, 32, 35 and 50 qt. polymer containers, white
- Dovetail plywood box w/ semi-gloss finish
- Full-extension, concealed slides w/ soft-close
- Rear storage with all single units
- Mounts to cabinet door and floor
- Patented door-mount brackets with 5" of adjustability and micro-trim adjuster (US Patent No. 8,388,076)
- Patented mounting straps (US Patent No. 9,756,941)
- 35 and 50 qt. polymer lids available (sold separately)
- TSCA Title VI compliant

Patented door-mount brackets with 5" of adjustability and micro-trim adjuster (US Patent No. 8,388,076)

Universal box fits both 35 and 50 qt. cans

Plywood box w/ semi-gloss finish

4VLWCSC-1535DM-1
Single 35 qt. Waste Container
(White/Wood finish shown)

4VLWCSC-1550DM-1
Single 50 qt. Waste Container
(White/Wood finish shown)

4VLWCSC-1835DM-2
Double 35 qt. Waste Container
(White/Wood finish shown)

4VLWCSC-2150DM-2
Double 50 qt. Waste Container
(White/Wood finish shown)

PALLET PROGRAM

Our Value Line waste containers are available in pallet quantities.

- Volume pricing
- Reduced transportation cost
- Minimal storage space
- Enviromentally-conscious packaging

Value Line Bottom Mount Waste Container Drawer Box w/ Soft-Close Slides

PRODUCT	DESCRIPTION	DIMS	MCO	CAB	FINISH	SLP
4VLWCSC-1535DM-1	Single 35 qt.	11-1/2" (293 mm) W x 21-1/2" (547 mm) D x 19-11/16" (501 mm) H	FF: 11-1/2" (292 mm) FL: 11-3/4" (298 mm)	B15	White/Wood	$297.25
4VLWCSC-1550DM-1	Single 50 qt.	11-1/2" (293 mm) W x 21-1/2" (547 mm) D x 23-19/32" (600 mm) H	FF: 11-1/2" (292 mm) FL: 11-3/4" (298 mm)	FHB15	White/Wood	$300.15
4VLWCSC-1527DM-2	Double 27 qt.	11-1/2" (293 mm) W x 21-1/2" (547 mm) D x 19-11/16" (501 mm) H	FF: 11-1/2" (293 mm) FL: 11-3/4" (299 mm)	B15	White/Wood	$297.25
4VLWCSC-2432DM-2	Double 32 qt.	20-1/2" (521 mm) W x 21-1/2" (547 mm) D x 19-17/32" (497 mm) H	FF: 20-1/2" (521 mm) FL: 20-3/4" (528 mm)	B24	White/Wood	$375.55
4VLWCSC-1835DM-2	Double 35 qt.	14-1/2" (369 mm) W x 21-1/2" (547 mm) D x 19-5/8" (499 mm) H	FF: 14-1/2" (368 mm) FL: 14-3/4" (375 mm)	B18	White/Wood	$317.55
4VLWCSC-2135DM-2	Double 35 qt.	17-1/2" (445 mm) W x 21-17/32" (548 mm) D x 19-5/8" (499 mm) H	FF: 17-1/2" (445 mm) FL: 17-3/4" (451 mm)	B21	White/Wood	$361.05
4VLWCSC-2150DM-2	Double 50 qt.	17-1/2" (445 mm) W x 21-17/32" (548 mm) D x 23-17/32" (598 mm) H	FF: 17-1/2" (445 mm) FL: 17-3/4" (451 mm)	FHB21	White/Wood	$366.85

4WCTM Series

Maple Top Mount

4WCTM-2450BBSCDM-2

- Designed for 15", 18", 21", 24" and 27" base cabinets
- Single 35 and 50 qt., double 27, 35 and 50 qt. and quadruple 27 qt. polymer containers, metallic silver or white
- Natural maple frame with semi-gloss finish
- Full-extension with 1-1/2" over-travel, ball-bearing slides (soft-close options available)
- Rear storage with all single units
- Side storage with 4WCTM-2450BBSCDM
- Mounts to cabinet door, rear and sidewalls
- Adjustable rear-mount brackets and pre-assembled door-mount brackets
- 35 and 50 qt. polymer lids available (sold separately)
- Compo+ US Patent Nos.: 8,978,917, 9,309,049, 9,669,995
- TSCA VI compliant

Scan for video

NOTE: 4WCTM-27-4 AND 4WCTM-27-4-597-FL cannot be door mounted. Rear storage bin with all 4WCTM single units: 10-3/8" (264 mm) W x 7-3/8" (187 mm) D x 6-3/8" (162 mm) H. Depending on cabinet construction and pull hardware, a lid on the rear waste container may not fully function. See pg. 30 for replacement containers and pg. 32 for lids.

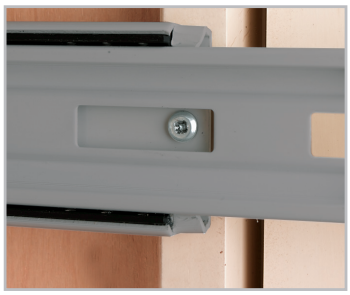

Front of slides mount to the face frame of the cabinet

Adjustable rear-mounting brackets for various cabinet depths

4WCTM Spacer Kit for customized cabinet applications provides up to 1-1/2" per side

4WCTM-12DM1
Single 35 qt. Waste Container
(White/maple finish shown)

4WCTM-1816DM-1
Single 35 qt. Waste Container
Reduced Depth
(Silver/maple finish shown)

4WCTM-15DM2
Double 27 qt. Waste Container
(White/maple finish shown)

4WCTM-27-4
Quadruple 27 qt. Waste Container
(White/maple finish shown)
CANNOT BE DOOR MOUNTED

4WCTM-1550DM1-343-FL
Single 50 qt. Waste Container
(Frameless)
(White/maple finish shown)

4WCTM-2150BBSCDM-2
Double 50 qt. Waste Container
w/ Ball-Bearing Soft-Close
(Silver/maple finish shown)

4WCTM-18CKWHSCDM2
Maple Top Mount Compo+
w/ 35 qt. Waste Container
(White/maple finish shown)
See pg. 38 for more information

Odor reducing mechanism that opens when the lid is raised and seals when the lid is closed

4WCTM-2450BBSCDM-2
Double 50 qt. Waste Container
w/ Ball-Bearing Soft-Close
(Silver/maple finish shown)

Specs on the following page

4WCTM Series

* Reduced depth
** Full height required

Maple Top Mount Waste Container Pullouts

PRODUCT	DESCRIPTION	DIMS	MCO	CAB	FINISH	SLP
1-1/2" Face Frame						
4WCTM-12DM1	Single 35 qt.	12" (305 mm) W x 22-3/4 - 24" (578 - 610 mm) D x 17-7/8" (455 mm) H	12" (305 mm)	FFB15	White/Maple	$171.10
4WCTM-1516DM-1	Single 35 qt.*	12" (305 mm) W x 16-7/16 - 17-1/2" (418 - 445 mm) D x 17-7/8" (454 mm) H	12" (305 mm)	FFB15	Silver/Maple	$145.70
4WCTM-1816DM-1	Single 35 qt.*	15" (381 mm) W x 16-1/4 - 17-1/2" (413 - 445 mm) D x 18" (458 mm) H	15" (381 mm)	FFB18	Silver/Maple	$152.25
4WCTM-1550DM-1	Single 50 qt.**	12" (305 mm) W x 23-1/4 - 24-1/2" (591 - 623 mm) D x 21-3/4" (553 mm) H	12" (305 mm)	FFFHB15	White/Maple	$187.05
4WCTM-1850DM-1	Single 50 qt.**	15" (381 mm) W x 23-1/4 - 24-1/2" (591 - 623 mm) D x 21-3/4" (553 mm) H	15" (381 mm)	FFFHB18	White/Maple	$227.65
4WCTM-15DM2	Double 27 qt.	12" (305 mm) W x 23-1/4 - 24-1/2" (591 - 623 mm) D x 17-3/4" (451 mm) H	12" (305 mm)	FFB15	White/Maple	$203.00
4WCTM-18DM2	Double 35 qt.	15" (381 mm) W x 22-3/4 - 24" (578 - 610 mm) D x 17-7/8" (455 mm) H	15" (381 mm)	FFB18	White/Maple	$210.25
4WCTM-21DM2	Double 35 qt.	18" (458 mm) W x 22-3/4 - 24" (578 - 610 mm) D x 17-7/8" (455 mm) H	18" (457 mm)	FFB21	White/Maple	$218.95
4WCTM-24DM2	Double 35 qt.	21" (534 mm) W x 22-3/4 - 24" (578 - 610 mm) D x 17-7/8" (455 mm) H	21" (533 mm)	FFB24	White/Maple	$248.65
4WCTM-2150DM-2	Double 50 qt.**	18" (458 mm) W x 23-1/4 - 24-1/2" (591 - 623 mm) D x 21-3/4" (553 mm) H	18" (457 mm)	FFFHB21	White/Maple	$224.75
4WCTM-27-4	Quad 27 qt.	24" (610 mm) W x 23-1/4 - 24-1/2" (591 - 623 mm) D x 17-3/4" (451 mm) H	24" (609 mm)	FFB27	White/Maple	$262.45
1-5/8" Face Frame						
4WCTM-12DM1-162	Single 35 qt.	11-3/4" (299 mm) W x 22-3/4 - 24" (578 - 610 mm) D x 17-7/8" (455 mm) H	11-3/4" (299 mm)	FFB15	White/Maple	$171.10
4WCTM-1818DM-1-162	Single 35 qt.*	14-3/4" (375 mm) W x 17-7/8 - 19-1/8" (455 - 486 mm) D x 17-7/8" (455 mm) H	14-3/4" (375 mm)	FFB18	White/Maple	$169.65
4WCTM-15DM2-162	Double 27 qt.	11-3/4" (298 mm) W x 23-1/4 - 24-1/2" (591 - 622 mm) D x 17-7/8" (454 mm) H	11-3/4" (299 mm)	FFB15	White/Maple	$203.00
4WCTM-18DM2-162	Double 35 qt.	14-3/4" (375 mm) W x 22-3/4 - 24" (578 - 610 mm) D x 17-7/8" (454 mm) H	14-3/4" (375 mm)	FFB18	White/Maple	$210.25
4WCTM-21DM2-162	Double 35 qt.	17-3/4" (451 mm) W x 22-3/4 - 24" (578 - 610 mm) D x 17-7/8" (454 mm) H	17-3/4" (451 mm)	FFB21	White/Maple	$218.95
4WCTM-24DM2-162	Double 35 qt.	20-3/4" (527 mm) W x 22-3/4 - 24" (578 - 610 mm) D x 17-7/8" (454 mm) H	20-3/4" (527 mm)	FFB24	White/Maple	$248.65
1-3/4" Face Frame						
4WCTM-12DM1-175	Single 35 qt.	11-1/2" (293 mm) W x 22-3/4 - 24" (578 - 610 mm) D x 17-7/8" (455 mm) H	11-1/2" (292 mm)	FFB15	White/Maple	$177.65
4WCTM-18DM2-175	Double 35 qt.	14-1/2" (369 mm) W x 22-3/4 - 24" (578 - 610 mm) D x 17-7/8" (455 mm) H	14-1/2" (368 mm)	FFB18	White/Maple	$213.15
Frameless - Side mount						
4WCTM-12DM1-343-FL	Single 35 qt.	13-1/2" (343 mm) W x 22-1/8" (563 mm) D x 17-7/8" (455 mm) H	13-1/2" (343 mm)	FLB15	White/Maple	$180.55
4WCTM-1550DM1-343-FL	Single 50 qt.**	13-1/2" (343 mm) W x 22-5/8" (575 mm) D x 21-3/4" (553 mm) H	13-1/2" (343 mm)	FLFHB15	White/Maple	$189.95
4WCTM-15DM2-343-FL	Double 27 qt.	13-1/2" (343 mm) W x 22-5/8" (575 mm) D x 17-3/4" (451 mm) H	13-1/2" (343 mm)	FLB15	White/Maple	$210.25
4WCTM-18DM2-419-FL	Double 35 qt.	16-1/2" (420 mm) W x 12-1/8" (309 mm) D x 17-7/8" (455 mm) H	16-1/2" (419 mm)	FLB18	White/Maple	$213.15
4WCTM-1850DM2-419-FL	Double 50 qt.**	16-1/2" (420 mm) W x 22-5/8" (575 mm) D x 21-3/4" (553 mm) H	16-1/2" (419 mm)	FLFHB18	White/Maple	$230.55
4WCTM-21DM2-495-FL	Double 35 qt.	19-1/2" (496 mm) W x 22-1/8" (563 mm) D x 17-7/8" (455 mm) H	19-1/2" (495 mm)	FLB21	White/Maple	$224.75
4WCTM-27-4-597-FL	Quad 27 qt.	23-1/2" (597 mm) W x 22-5/8" (575 mm) D x 17-3/4" (451 mm) H	25-1/2" (648 mm)	FLB27	White/Maple	$262.45
Maple Top Mount Waste Container Pullouts w/ Soft-Close						
1-1/2" Face Frame						
4WCTM-12BBSCDM1	Single 35 qt.	12" (305 mm) W x 22-3/4 - 24" (578 - 610 mm) D x 17-7/8" (455 mm) H	12" (305 mm)	FFB15	Silver/Maple	$192.85
4WCTM-15BBSCDM2	Double 27 qt.	12" (305 mm) W x 23-1/4 - 24-1/2" (591 - 623 mm) D x 17-3/4" (451 mm) H	12" (305 mm)	FFB15	Silver/Maple	$218.95
4WCTM-18BBSCDM2	Double 35 qt.	15" (381 mm) W x 22-3/4 - 24" (578 - 610 mm) D x 17-7/8" (455 mm) H	15" (381 mm)	FFB18	Silver/Maple	$242.15
4WCTM-1550BBSCDM-1	Single 50 qt.**	12" (305 mm) W x 23-1/4 - 24-1/2" (591 - 623 mm) D x 21-3/4" (553 mm) H	12" (305 mm)	FFFHB15	Silver/Maple	$204.45
4WCTM-2150BBSCDM-2	Double 50 qt.**	18" (458 mm) W x 23-1/4 - 24-1/2" (591 - 623 mm) D x 21-3/4" (553 mm) H	18" (457 mm)	FFFHB21	Silver/Maple	$247.95
4WCTM-2450BBSCDM-2	Double 50 qt.	21 - 22-5/32" (534 - 563 mm) W x 22-1/2 - 24-1/2" (572 - 623 mm) D x 21-3/4" (553 mm) H	21" (533 mm)	FHB24	Silver/Maple	$346.55
Maple Top Mount Compost Pullouts w/ Soft-Close						
4WCTM-12CK**SCDM1	Single Compo+	12" (305 mm) W x 22-7/8" (581 mm) D x 16-15/16" (430 mm) H	12" (305 mm)	B15	**/Maple	$297.25
4WCTM-18CK**SCDM2	Compo+ w/ 35 qt.	15" (381 mm) W x 22-7/8" (581 mm) D x 19-7/8" (504 mm) H	15" (381 mm)	B18	**/White/ Maple	$297.25
Accessories						
4WCTM-SP-KIT	For Custom Face Frame Installations	1-1/2" (39 mm) W x 22-7/16" (570 mm) D x 2-7/16" (62 mm) H				$46.40

** select "BK" for black, "GR" for green,"OG" for orion gray, "WH" for white - *For use in compo+ unit* only

4WCTM Series Rev-A-Motion®

Additional mending plate for frameless applications

REV-A-MOTION SOFT OPEN SOFT CLOSE

- Designed for 18" and 21" base cabinets
- Single and double 50 qt. polymer containers, orion gray & walnut or single and double 35 or 50 qt. polymer containers, metallic silver & maple
- Walnut dovetail frame with satin finish or natural maple construction with semi-gloss finish
- Full-extension with 1-1/2" over-travel, ball-bearing slides w/ Rev-A-Motion® soft-open/soft-close (US Patent No. 8,297,722)
- Rear storage with single units
- Mounts to cabinet door, rear and side walls
- Adjustable rear-mount brackets and pre-assembled door-mount brackets
- 35 and 50 qt. polymer lids available (sold separately)
- TSCA Title VI compliant

4WCTM-WNRM-2150DM-2

4WCTM-WNRM-1850DM-1
Single 50 qt. Waste Container
(Orion gray/walnut finish shown)

4WCTM-RM-2135DM-2
Double 35 qt. Waste Container
(Silver/maple finish shown)

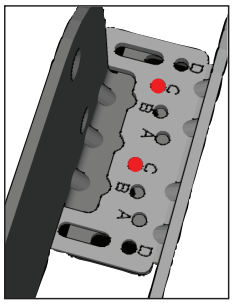

Example of 1.5" Face Frame Preset Hole Locations

NOTE: See pg. 30 for replacement containers and pg. 32 for lids.

Preset Hole Locations

	Side Mounting Bracket Location	Product Member Hole Location	Mending Plate Hole Location
1-1/2" (38 mm) Face Frame	C	C	N/A
1-5/8" (41 mm) Face Frame	B	B	N/A
1-3/4" (45 mm) Face Frame	A	A	N/A
Frameless with 3/4" (19 mm) Wall	B	A	2 & 5
Frameless with 11/16" (18 mm) Wall	B	D	1 & 8
Frameless with 7/8" (22 mm) Wall	B	B	3 & 8

Walnut Top Mount Waste Container Pullouts w/ Rev-A-Motion® Soft-Close

PRODUCT	DESCRIPTION	DIMS	MCO	CAB	FINISH	SLP
4WCTM-WNRM-1850DM-1	Single 50 qt.	15-3/8" (391 mm) W x 21-3/4 - 24" (553 - 610 mm) D x 24-3/4" (629 mm) H	14-1/2" (368 mm) - FF 15-3/8" (391 mm) - FL	FHB18	Orion Gray/Walnut	$565.50
4WCTM-WNRM-2150DM-2	Double 50 qt.	18-3/8" (467 mm) W x 21-3/4 - 24" (553 - 610 mm) D x 24-3/4" (629 mm) H	17-1/2" (445 mm) - FF 18-3/8" (467 mm) - FL	FHB21	Orion Gray/Walnut	$594.50

Maple Top Mount Waste Container Pullouts w/ Rev-A-Motion® Soft-Close

4WCTM-RM-1835DM-1	Single 35 qt.	15-3/8" (391 mm) W x 21-3/4 - 24" (553 - 610 mm) D x 19-17/32" (497 mm) H	14-1/2" (368 mm) - FF 15-3/8" (391 mm) - FL	B18	Metallic Silver/Maple	$420.50
4WCTM-RM-1850DM-1	Single 50 qt.	15-3/8" (391 mm) W x 21-3/4 - 24" (553 - 610 mm) D x 24-3/4" (629 mm) H	14-1/2" (368 mm) - FF 15-3/8" (391 mm) - FL	FHB18	Metallic Silver/Maple	$449.50
4WCTM-RM-2135DM-2	Double 35 qt.	18-3/8" (467 mm) W x 21-3/4 - 24" (553 - 610 mm) D x 21" (534 mm) H	17-1/2" (445 mm) - FF 18-3/8" (467 mm) - FL	B21	Metallic Silver/Maple	$464.00
4WCTM-RM-2150DM-2	Double 50 qt.	18-3/8" (467 mm) W x 21-3/4 - 24" (553 - 610 mm) D x 24-3/4" (629 mm) H	17-1/2" (445 mm) - FF 18-3/8" (467 mm) - FL	FHB 21	Metallic Silver/Maple	$478.50

8-010/8-700 Series

Undersink Pivot Out

8-010
- Designed for 33″ and 36″ sink base cabinets
- Single black polymer container with built-in handle, 14 or 15 L
- Stainless steel or white lacquer finish
- Lid rises as container pivots out
- Mounts to cabinet door, floor and side walls

8-700
- Designed for full access 36″ sink base cabinets
- Single white polymer bin with built-in handle, 20 L
- Lid rises as container pivots out
- Mounts to cabinet door and side walls

8-010314-15

8-010412-15
Single 15 L Waste Container
(White lacquered finish shown)

8-700411-20
Single 20 L Waste Container
(White polymer finish shown)

Undersink Waste Container Pivot Outs

PRODUCT	DESCRIPTION	DIMS	MCO	CAB	FINISH	SLP
8-010212-14	Single 14 L	11″ (280 mm) W x 10-1/2″ (267 mm) D x 17-1/8 - 11″ (435 - 280 mm) H	13-3/4" (350 mm)	SB33	White Lacquered	$117.45
8-010412-15	Single 15 L	11-3/4″ (299 mm) W x 10-1/2″ (267 mm) D x 15-3/16″ (386 mm) H	14-3/4″ (375 mm) - FF 14-3/4″ (375 mm) - FL	SB36	White Lacquered	$129.05
8-010314-15	Single 15 L	11-3/4″ (299 mm) W x 10-1/2″ (267 mm) D x 15-3/16″ (386 mm) H	14-3/4″ (375 mm) - FF 14-3/4″ (375 mm) - FL	SB36	Stainless Steel	$158.05
8-700411-20	Single 20 L	15-3/4″ (401 mm) W x 7-1/4″ (185 mm) D x 18″ (458 mm) H	17-1/2" (445 mm)	SB36	White Polymer	$201.55

Undersink Pullout

8-785 Series

8-785-30-2SS

- Designed for 30" sink base cabinets
- Double stainless steel containers with handles, (1) 10 L and (1) 20 L
- Full-extension, ball-bearing slides
- Mounts to cabinet floor
- Built-in polymer lid
- Door-mountable frame available

Stainless Steel Undersink Mount Waste Container Pullouts

PRODUCT	DESCRIPTION	DIMS	MCO	CAB	FINISH	SLP
8-785-30-2SS	10 L and 20 L	10-1/4" (261 mm) W x 18-3/4" (477 mm) D x 15-3/16" (386 mm) H	11" (279 mm)	SB30	Stainless Steel	$478.50
8-785-30-DM2SS	10 L and 20 L w/ Door Mount	10-1/4" (261 mm) W x 18-3/4" (477 mm) D x 15-3/16" (386 mm) H	11" (279 mm)	SB30	Stainless Steel	$529.25

Wire Undersink Pullout

5SBWC Series

Soft Close

- Designed for 24" and larger sink base cabinets
- Double metallic silver polymer containers with handles, (1) 8 L and (1) 15 L
- Full-extension, undermount slides w/ soft-close
- Mounts to cabinet floor
- (1) green lid and (1) white lid
- Door mount kit available (sold separately)

Scan for video

Wire Undersink Waste Pullout

PRODUCT	DESCRIPTION	DIMS	MCO	CAB	FINISH	SLP
5SBWC-815S-1	(1) 8 L and (1) 15 L	8-15/16" (228 mm) W x 18-19/32" (473 mm) D x 14-1/4" (362 mm) H	9" (229 mm)	SB24+	Silver	$173.30
Accessories						
5WB-DMKIT	Door Mount Kit				Chrome	$39.15

5SOWC Series

Wire Door Mount Waste Container

- Designed for 30" sink base cabinets
- Single 8 L polymer container, metallic silver
- Built-in hand towel rack
- Chrome-plated wire frame
- Extended mounting bar
- Mounts to cabinet door
- (1) white lid

Wire Door Mount Waste Container

PRODUCT	DESCRIPTION	DIMS	MCO	CAB	FINISH	SLP
5SOWC-8-1	Single 8 L	8-1/2" (216 mm) W x 7-11/16" (196 mm) D x 12" (305 mm) H	12" (305 mm)	VB30	Metallic Silver	$53.65

4SOWC Series

Maple Door Mount

- Designed for 30" vanity base cabinets
- Single 8 L polymer container, metallic silver
- Maple dovetail frame with semi-gloss finish
- Mounts to cabinet door
- (4) Patented pre-assembled adjustable door-mount brackets (US Patent No. 7,204,569)
- (1) white lid
- TSCA Title VI compliant

Maple Door Mount Vanity Waste Container

PRODUCT	DESCRIPTION	DIMS	MCO	CAB	FINISH	SLP
4SOWC-8-1	Single 8 L	10-3/8" (264 mm) W x 7-3/8" (187 mm) D x 12-5/16" (313 mm) H	12-3/4" (324 mm)	VB30	Silver	$92.80

Countertop Mount

8-060 Series

- Designed for countertop installation
- 12-1/4" diameter
- Removable 11 or 13 L polymer bin with built-in handle, black
- Stainless steel lid and rubber inner ring

Countertop Mount Waste Containers

PRODUCT	DESCRIPTION	DIMS	FINISH	SLP
8-060-11SS	11 L	12-1/4" (312 mm) W x 12-1/4" (312 mm) D x 11-5/8" (296 mm) H	Stainless Steel/Black	$345.10
8-060-15SS	13 L	12-1/4" (312 mm) W x 12-1/4" (312 mm) D x 13-1/4" (337 mm) H	Stainless Steel/Black	$362.50

TIP-ON Kit

TOKIT Series

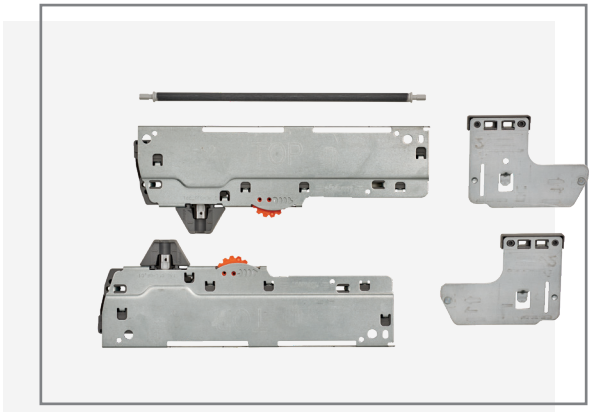

4WC-TOKIT-18

- Designed for all standard depth waste containers, 4WCSC Series and 5LB LEGRABOX Series
- 4-dimensional adjustment ensures precise gap layout
- Open with a touch of a finger
- Adjustment wheel allows a tool-free integrated depth adjustment
- Front gap of just 2.5 mm

MOVENTO TIP-ON Kit for 4WCSC Series

PRODUCT	DESCRIPTION	DIMS	SLP
4WC-TOKIT-12	12" 4WCSC TIP-ON Kit	3-1/2" (89 mm) W x 9" (229 mm) D x 1-3/4" (45 mm) H	$72.50
4WC-TOKIT-15	15" 4WCSC TIP-ON Kit	3-1/2" (89 mm) W x 9" (229 mm) D x 1-3/4" (45 mm) H	$75.40
4WC-TOKIT-18	18" 4WCSC TIP-ON Kit	3-1/2" (89 mm) W x 9" (229 mm) D x 1-3/4" (45 mm) H	$78.30
MOVENTO TIP-ON Kit for 5LB Series			
5LB-TOKIT-12	12" LEGRABOX TIP-ON Kit	3-1/2" (89 mm) W x 9" (229 mm) D x 1-3/4" (45 mm) H	$72.50
5LB-TOKIT-15	15" LEGRABOX TIP-ON Kit	3-1/2" (89 mm) W x 9" (229 mm) D x 1-3/4" (45 mm) H	$78.30
5LB-TOKIT-18	18" LEGRABOX TIP-ON Kit	3-1/2" (89 mm) W x 9" (229 mm) D x 1-3/4" (45 mm) H	$81.20

PROP 65 WARNING FOR CALIFORNIA RESIDENTS
WARNING: These products can expose you to chemicals such as formaldehyde, lead or styrene, which are known to the State of California to cause cancer and birth defects or other reproductive harm. For more information go to www.P65Warnings.ca.gov
REV-A-SHELF

BLIND CORNER

Let Rev-A-Shelf® end your blind corner dilemma with our line of innovative organizational accessories. Specially designed to maximize the storage capacity of your cabinets, each product incorporates revolutionary pivot, pull and slide technologies that allow access to every inch of the organizers. While functional and practical, our blind corner solutions are aesthetically pleasing and available in an array of finishes and colors.

Innovation through ***Organization***™

5370 Series

The Cloud Contemporary Blind Corner

Soft Close

- Designed for 15", 18" and 21" blind corner cabinet openings
- Single and double solid bottom shelves, orion gray
- Textured linen finish with orion gray flat wire accents
- Left or right handed mounting
- Mounts to cabinet floor (single) and side walls (double)
- Mounted telescopic post system (double)
- 45 lb. capacity per shelf
- Soft-close available (sold separately)
- TSCA Title VI compliant

Designed in cooperation with EIGE

Scan for video

5372-21-FOG-R

Single blind corner organizer for left door/ blind right corner

Double blind corner organizer for right door/ blind left corner

REV-A-SHELF

PRODUCT #	SURFACE AREA
5371-15	361 sq. in.
5371-18	471 sq. in.
5371-21	527 sq. in.
5372-15	722 sq. in.
5372-18	942 sq. in.
5372-21	1054 sq. in.

Min. Dimensions				
PRODUCT #	A	B	C	D
5371-15/ 5372-15	34" (864 mm)	15" (381 mm)	7" (180 mm)	4-1/8" (106 mm)
5371-18/5372-18	38" (965 mm)	18" (457 mm)	9-3/16" (233 mm)	3-9/16" (91 mm)
5371-21/5372-21	40" (1016 mm)	21" (533 mm)	9-1/4" (235 mm)	3-7/8" (98 mm)

5371-21-FOG-L
Single Blind Corner Organizer for
left door/blind right cabinet
(21" Shelf shown)

5372-15-FOG-L
Single Blind Corner Organizer for
left door/blind right cabinet
(15" Shelves shown)

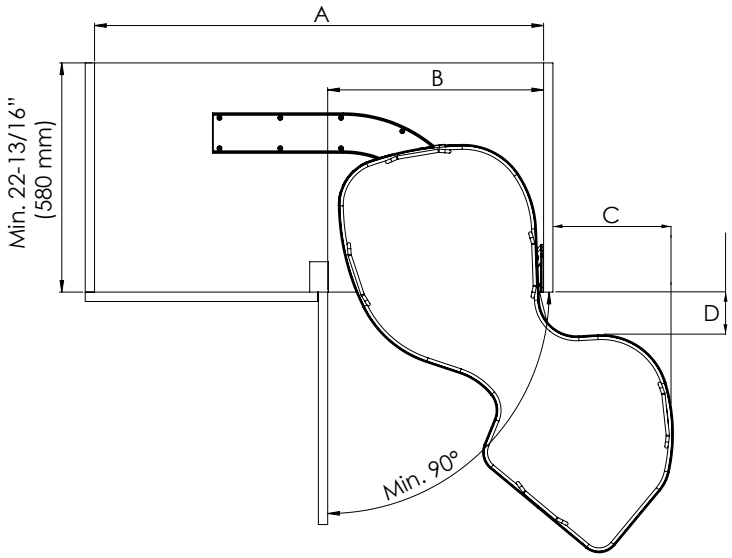

Featuring orion gray flat wire with
textured linen solid bottom

PRODUCT	DESCRIPTION	DIMS	MCO	CAB	FINISH	SLP
Single Blind Corner for Right Door/Blind Left Cabinets						
5371-15-FOG-R	Single for 15" Cabinet Opening	33" (839 mm) W x 21-7/8" (556 mm) D x 6-1/2" (166 mm) H	15" (381 mm)	BC42	Orion Gray	$375.55
5371-18-FOG-R	Single for 18" Cabinet Opening	37-19/32" (956 mm) W x 21-9/16" (548 mm) D x 6-1/2" (166 mm) H	18" (457 mm)	BC45	Orion Gray	$390.05
5371-21-FOG-R	Single for 21" Cabinet Opening	39" (991 mm) W x 21-3/4" (553 mm) D x 6-1/2" (166 mm) H	21" (533 mm)	BC48	Orion Gray	$378.45
Single Blind Corner for Left Door/Blind Right Cabinets						
5371-15-FOG-L	Single for 15" Cabinet Opening	33" (839 mm) W x 21-7/8" (556 mm) D x 6-1/2" (166 mm) H	15" (381 mm)	BC42	Orion Gray	$375.55
5371-18-FOG-L	Single for 18" Cabinet Opening	37-19/32" (956 mm) W x 21-9/16" (548 mm) D x 6-1/2" (166 mm) H	18" (457 mm)	BC45	Orion Gray	$390.05
5371-21-FOG-L	Single for 21" Cabinet Opening	39" (991 mm) W x 21-3/4" (553 mm) D x 6-1/2" (166 mm) H	21" (533 mm)	BC48	Orion Gray	$378.45
Double Blind Corner for Right Door/Blind Left Cabinets						
5372-15-FOG-R	Double for 15" Cabinet Opening	33" (839 mm) W x 21-7/8" (556 mm) D x 24-1/2 - 30-1/4" (623 - 769 mm) H	15" (381 mm)	BC42	Orion Gray	$869.30
5372-18-FOG-R	Double for 18" Cabinet Opening	37-19/32" (956 mm) W x 21-9/16" (548 mm) D x 24-1/2 - 30-1/4" (623 - 769 mm) H	18" (457 mm)	BC45	Orion Gray	$899.00
5372-21-FOG-R	Double for 21" Cabinet Opening	39" (991 mm) W x 21-3/4" (553 mm) D x 24-7/16 - 30-1/4" (621 - 769 mm) H	21" (533 mm)	BC48	Orion Gray	$913.50
Double Blind Corner for Left Door/Blind Right Cabinets						
5372-15-FOG-L	Double for 15" Cabinet Opening	33" (839 mm) W x 21-7/8" (556 mm) D x 24-1/2 - 30-1/4" (623 - 769 mm) H	15" (381 mm)	BC42	Orion Gray	$869.30
5372-18-FOG-L	Double for 18" Cabinet Opening	37-19/32" (956 mm) W x 21-9/16" (548 mm) D x 24-1/2 - 30-1/4" (623 - 769 mm) H	18" (457 mm)	BC45	Orion Gray	$899.00
5372-21-FOG-L	Double for 21" Cabinet Opening	39" (991 mm) W x 21-3/4" (553 mm) D x 24-7/16 - 30-1/4" (621 - 769 mm) H	21" (533 mm)	BC48	Orion Gray	$913.50
Soft-Close Kit						
5371-SC-KIT-1	Soft-Close Kit for Single Shelf					$75.40
5372-SC-KIT-2	Soft-Close Kit for Double Shelves					$145.00

5370 Series

The Cloud Contemporary Blind Corner

- Designed for 15", 18" and 21" blind corner cabinet openings
- Single and double solid bottom shelves, natural maple or gray
- Chrome round wire accents
- Left or right handed mounting
- Mounts to cabinet floor (single) and side walls (double)
- Mounted telescopic post system (double)
- 45 lb. capacity per shelf
- Soft-close available (sold separately)
- TSCA Title VI compliant

Designed in cooperation with GIGE

Scan for video

5372-21-MP-L

Single blind corner organizer for left door/ blind right corner

Double blind corner organizer for right door/ blind left corner

PRODUCT #	SURFACE AREA
5371-15	361 sq. in.
5371-18	471 sq. in.
5371-21	527 sq. in.
5372-15	722 sq. in.
5372-18	942 sq. in.
5372-21	1054 sq. in.

Min. Dimensions				
PRODUCT #	A	B	C	D
5371-15/ 5372-15	34" (864 mm)	15" (381 mm)	7" (180 mm)	4-1/8" (106 mm)
5371-18/5372-18	38" (965 mm)	18" (457 mm)	9-3/16" (233 mm)	3-9/16" (91 mm)
5371-21/5372-21	40" (1016 mm)	21" (533 mm)	9-1/4" (235 mm)	3-7/8" (98 mm)

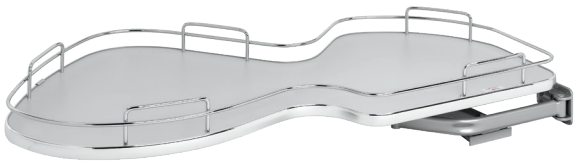

5371-21-GR-R
Single Blind Corner Organizer for
right door/blind left cabinet
(21" Gray Shelf shown)

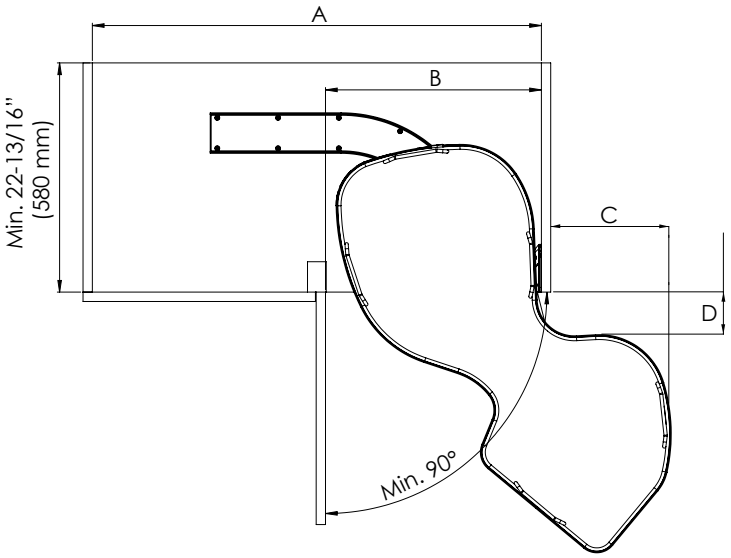

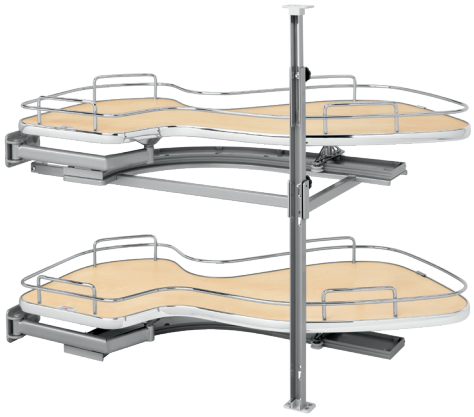

5372-15-MP-L
Single Blind Corner Organizer for
left door/blind right cabinet
(15" Maple Shelves shown)

NOTE: ** Insert "MP" for Maple Shelf or "GR" for Gray Shelf

PRODUCT	DESCRIPTION	DIMS	MCO	CAB	SLP
Single Blind Corner for Right Door/Blind Left Cabinets					
5371-15-**-R	Single for 15" Cabinet Opening	33" (838 mm) W x 21-7/8" (556 mm) D x 6-1/2" (165 mm) H	15" (381 mm)	BC42	$327.70
5371-18-**-R	Single for 18" Cabinet Opening	37-5/8" (956 mm) W x 21-9/16" (548 mm) D x 6-1/2" (165 mm) H	18" (457 mm)	BC45	$336.40
5371-21-**-R	Single for 21" Cabinet Opening	39" (991 mm) W x 21-3/4" (553 mm) D x 6-1/2" (165 mm) H	21" (533 mm)	BC48	$342.20
Single Blind Corner for Left Door/Blind Right Cabinets					
5371-15-**-L	Single for 15" Cabinet Opening	33" (839 mm) W x 21-7/8" (556 mm) D x 6-1/2" (166 mm) H	15" (381 mm)	BC42	$327.70
5371-18-**-L	Single for 18" Cabinet Opening	37-19/32" (956 mm) W x 21-9/16" (548 mm) D x 6-1/2" (166 mm) H	18" (457 mm)	BC45	$336.40
5371-21-**-L	Single for 21" Cabinet Opening	39" (991 mm) W x 21-3/4" (553 mm) D x 6-1/2" (166 mm) H	21" (533 mm)	BC48	$342.20
Double Blind Corner for Right Door/Blind Left Cabinets					
5372-15-**-R	Double for 15" Cabinet Opening	33" (839 mm) W x 21-7/8" (556 mm) D x 24-1/2 - 30-1/4" (623 - 769 mm) H	15" (381 mm)	BC42	$826.50
5372-18-**-R	Double for 18" Cabinet Opening	37-19/32" (956 mm) W x 21-9/16" (548 mm) D x 24-1/2 - 30-1/4" (623 - 769 mm) H	18" (457 mm)	BC45	$841.00
5372-21-**-R	Double for 21" Cabinet Opening	39" (991 mm) W x 21-3/4" (553 mm) D x 24-7/16 - 30-1/4" (621 - 769 mm) H	21" (533 mm)	BC48	$870.00
Double Blind Corner for Left Door/Blind Right Cabinets					
5372-15-**-L	Double for 15" Cabinet Opening	33" (839 mm) W x 21-7/8" (556 mm) D x 24-1/2 - 30-1/4" (623 - 769 mm) H	15" (381 mm)	BC42	$826.50
5372-18-**-L	Double for 18" Cabinet Opening	37-19/32" (956 mm) W x 21-9/16" (548 mm) D x 24-1/2 - 30-1/4" (623 - 769 mm) H	18" (457 mm)	BC45	$841.00
5372-21-**-L	Double for 21" Cabinet Opening	39" (991 mm) W x 21-3/4" (553 mm) D x 24-7/16 - 30-1/4" (621 - 769 mm) H	21" (533 mm)	BC48	$870.00
Soft-Close Kit					
5371-SC-KIT-1	Soft-Close Kit for Single Shelf				$75.40
5372-SC-KIT-2	Soft-Close Kit for Double Shelves				$145.00

587 Series

Girasolo Blind Corner Optimizer

COMPAGNUCCI
QUALITY MADE IN ITALY

- Designed for 12", 15" or 18" blind cabinet openings
- Unique pullout motion limits interference with adjacent cabinets & appliances
- Soft-opening and closing system
- Two-tier, solid bottom adjustable shelves, maple
- 33 lb. (per front shelf) capacity
- Easy 8-screw installation
- Italian design
- TSCA Title VI compliant

587-12-RMP

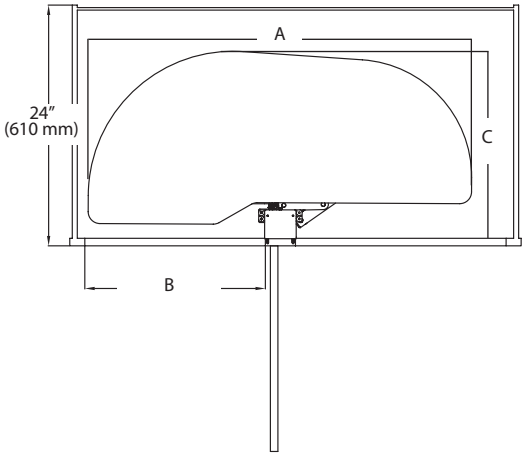

Min. Dimensions				
PRODUCT #	A	B	C	Surface Area
587-12-***	34" (864 mm)	12" (305 mm)	14-3/16" (360mm)	310 sq in per shelf
587-15-***	37" (940 mm)	15" (381 mm)	16-5/32" (410 mm)	418 sq in per shelf
587-18-***	39" (991 mm)	18" (457 mm)	18-1/2" (470 mm)	511 sq in per shelf

Easily adjustable top shelf

Two-Tier Blind Corner Optimizer for Right Door/Blind Left Cabinets

PRODUCT	DESCRIPTION	DIMS	MCO	CAB	SLP
587-12-RMP	Double for 12" Cabinet Opening	32-23/32" (832 mm) W x 14-13/32" (367 mm) D x 24-13/32 - 30-11/16" (621 - 780 mm) H	12" (305 mm)	BC42	$850.00
587-15-RMP	Double for 15" Cabinet Opening	35-1/2" (902 mm) W x 16-7/16" (418 mm) D x 24-1/2 - 30-1/2" (623 - 775 mm) H	15" (381 mm)	BC45	$861.45
587-18-RMP	Double for 18" Cabinet Opening	38-13/32" (976 mm) W x 18-15/32" (470 mm) D x 24-1/2 - 30-1/2" (623 - 775 mm) H	18" (457 mm)	BC48	$873.65
Two-Tier Blind Corner Optimizer for Left Door/Blind Right Cabinets					
587-12-LMP	Double for 12" Cabinet Opening	32-23/32" (832 mm) W x 14-13/32" (367 mm) D x 24-13/32 - 30-11/16" (621 - 780 mm) H	12" (305 mm)	BC42	$850.00
587-15-LMP	Double for 15" Cabinet Opening	35-1/2" (902 mm) W x 16-7/16" (418 mm) D x 24-1/2 - 30-1/2" (623 - 775 mm) H	15" (381 mm)	BC45	$861.45
587-18-LMP	Double for 18" Cabinet Opening	38-13/32" (976 mm) W x 18-15/32" (470 mm) D x 24-1/2 - 30-1/2" (623 - 775 mm) H	18" (457 mm)	BC48	$873.65

Maple Girasolo Blind Corner Optimizer

4WLS Series

NEW!

- Designed for 12", 15" or 18" blind cabinet openings
- 5/8" thick natural maple shelf bottom
- 1-5/8" solid wood frame with a finger joint rim
- Pulls directly forward, eliminating clearance issues from adjacent appliances
- Left or right-handed mounting
- Mounts to cabinet floor, side and top
- Mounted telescopic with a soft-close pivot hardware system
- Easy installation
- 33 lb. capacity per shelf
- Soft-close pivot hardware system
- Vertically adjustable shelves
- TSCA Title VI compliant

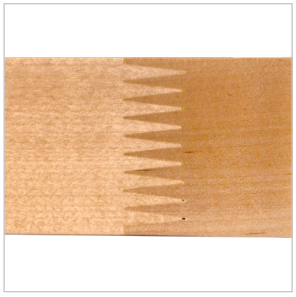

Finger joint construction

Maple Two-Tier Blind Corner Optimizer for Right Door/Blind Left Cabinets

PRODUCT	DESCRIPTION	DIMS	MCO	CAB	SLP
4WLS87-12-R	Double for 12" Cabinet Opening	33-1/16" (840 mm) W x 14-9/16" (371 mm) D x 24-13/32 - 30-11/16" (621 - 780 mm) H	12" (305 mm)	BC42	$724.25
4WLS87-15-R	Double for 15" Cabinet Opening	35-13/16" (910 mm) W x 16-5/8" (423 mm) D x 24-13/32 - 30-11/16" (621 - 780 mm) H	15" (381 mm)	BC45	$740.25
4WLS87-18-R	Double for 18" Cabinet Opening	37-31/32" (965 mm) W x 18-1/32" (459 mm) D x 24-13/32 - 30-11/16" (621 - 780 mm) H	18" (457 mm)	BC48	$761.10

Maple Two-Tier Blind Corner Optimizer for Left Door/Blind Right Cabinets

4WLS87-12-L	Double for 12" Cabinet Opening	32-23/32" (831 mm) W x 14-3/8" (366 mm) D x 24-1/2 - 30-1/2" (623 - 775 mm) H	12" (305 mm)	BC42	$724.25
4WLS87-15-L	Double for 15" Cabinet Opening	35-1/2" (902 mm) W x 16-7/16" (418 mm) D x 24-1/2 - 30-1/2" (623 - 775 mm) H	15" (381 mm)	BC45	$740.25
4WLS87-18-L	Double for 18" Cabinet Opening	38-13/32" (976 mm) W x 18-15/32" (470 mm) D x 24-13/32 - 30-23/32" (621 - 781 mm) H	18" (457 mm)	BC48	$761.10

53PSPE Series

Elite Solid-Bottom Blind Corner Optimizer

53PSPE3-18SC-MP

- Designed for full-height 15" and 18" blind corner cabinet openings
- Two or Three-tier wire frame
- (4) or (6) solid-bottom shelves, natural maple, gray or textured linen
- Up to (4) Independently sliding top shelves
- Chrome-plated round wire or orion gray flat wire
- Full-extension, ball-bearing slides with soft-close
- Universal mounting, non-handed
- Mounts to cabinet floor
- 27 lb. (per front shelf) and 34 lb. (per back shelf) capacity
- TSCA Title VI compliant

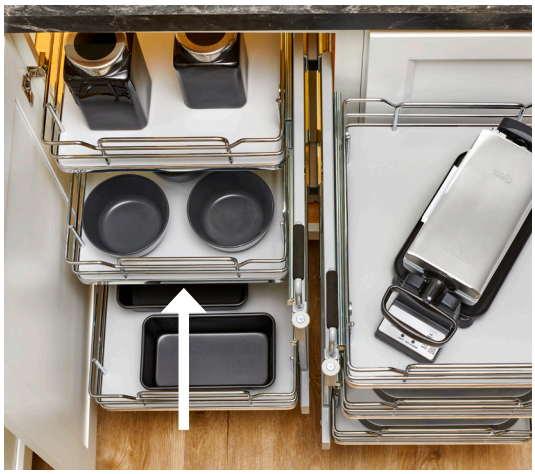

Sliding top shelves works independently from the lower shelves

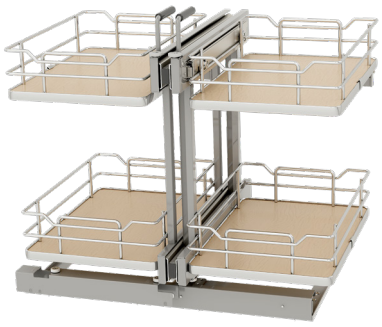

53PSPE-15SC-MP
Elite Two-Tier Blind Corner Optimizer
(Maple finish shown)

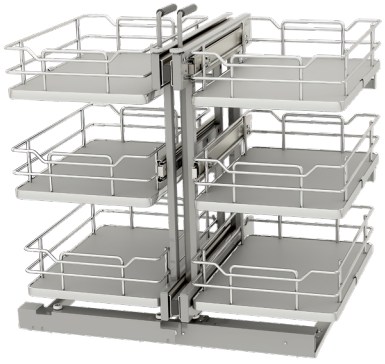

53PSPE3-15SC-MP
Elite Three-Tier Blind Corner Optimizer
(Gray finish shown)

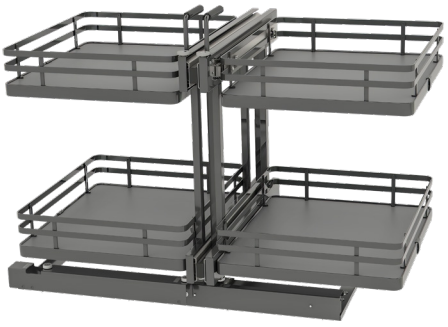

53PSPE-18SC-FOG
Elite Two-Tier Blind Corner Optimizer
(Orion Gray finish shown)

SPACE BETWEEN SHELVES
Two-tier soft-close = 11" (279 mm)
Three-tier soft-close = 7-15/16" (202 mm)
Two-tier non soft-close = 10-9/32" (261 mm)

15" (381 mm) Min. Cabinet Width opening (15-CR)
18" (457 mm) Min. Cabinet Width opening (18-CR)
Both Models:
21-21/32" (550 mm) Minimum Inside Cabinet Depth
22" (559 mm) Minimum Cabinet Height opening (5PSP)
25" (635 mm) Minimum Cabinet Height opening (5PSP3)

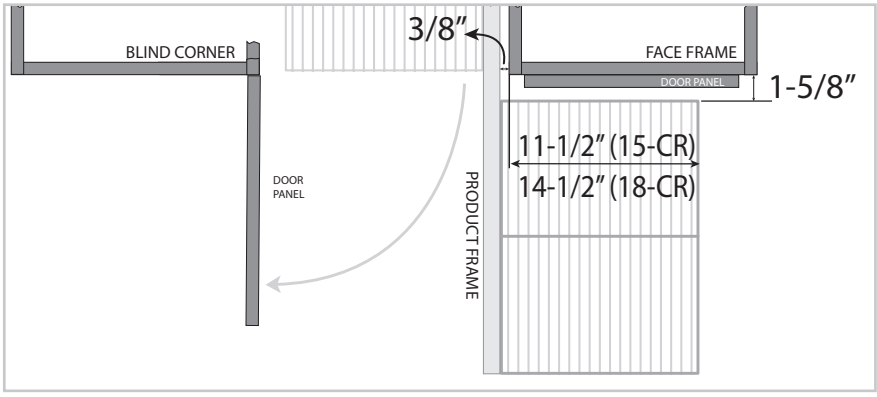

PRODUCT #	SURFACE AREA
53PSPE-15SC-**	194 in² per shelf
53PSPE-18SC-**	243 in² per shelf
53PSPE3-15SC-**	194 in² per shelf
53PSPE3-18SC-**	243 in² per shelf

NOTE: ** Insert "MP" for Maple Shelf or "GR" for Gray Shelf

PRODUCT	DESCRIPTION	DIMS	MCO	CAB	SLP
Elite Two-Tier Solid Bottom Blind Corner Optimizer - Non-Handed w/ Soft-Close					
53PSPE-15SC-**	Two-Tier Blind Corner Optimizer	26-1/4" (667 mm) W x 20-1/4" (514 mm) D x 21" (533 mm) H	15" (381 mm)	BC45	$1,116.50
53PSPE-18SC-**	Two-Tier Blind Corner Optimizer	32-1/4" (819 mm) W x 20-1/4" (514 mm) D x 21" (533 mm) H	18" (457 mm)	BC48	$1,174.50
Elite Three-Tier Solid Bottom Blind Corner Optimizer - Non-Handed w/ Soft-Close					
53PSPE3-15SC-**	Three-Tier Blind Corner Optimizer	26-1/4" (667 mm) W x 20-1/4" (514 mm) D x 24" (610 mm) H	15" (381 mm)	FHBC45	$1,322.40
53PSPE3-18SC-**	Three-Tier Blind Corner Optimizer	32-1/4" (819 mm) W x 20-1/4" (514 mm) D x 24" (610 mm) H	18" (457 mm)	FHBC48	$1,377.50
Elite Two-Tier Solid Bottom Blind Corner Optimizer - Non-Handed w/ Soft-Close					
53PSPE-18SC-FOG	Two-Tier Blind Corner Optimizer	32-1/4" (820 mm) W x 20-13/32" (519 mm) D x 23-1/2" (597 mm) H	18" (458 mm)	BC48	$1261.50

5PSP Series

Wire Bottom Blind Corner Optimizer

5PSP3-18SC-CR

Soft Close

- Designed for 15" and 18" blind corner cabinet openings
- Two or three-tier wire frame
- (4) or (6) wire bottom shelves with round wire accents
- (2) slide configurations:
  - Full-extension ball-bearing slides
  - Full-extension, ball-bearing slides w/ soft-close
- Full-extension, ball-bearing slides
- Universal mounting, non-handed
- Mounts to cabinet floor
- 15 lb. capacity per shelf

Scan for video

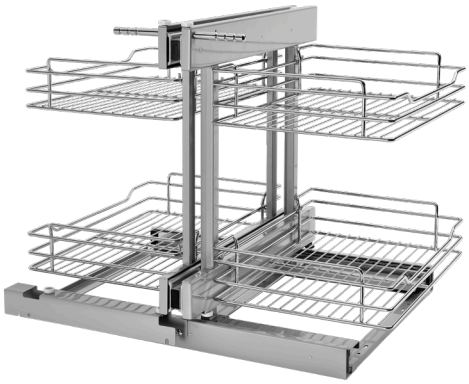

5PSP-15-CR
Two-Tier Blind Corner Optimizer
(15" Non Soft-Close version shown)

Unit partially extended

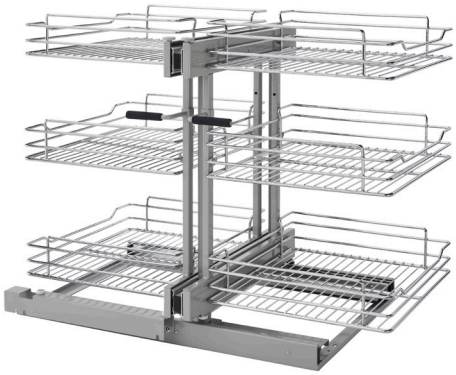

5PSP3-18SC-CR
Three-Tier Blind Corner Optimizer
w/ Soft-Close
(18" version shown)

SPACE BETWEEN SHELVES
Two-tier soft-close = 11" (279 mm)
Three-tier soft-close = 7-15/16" (202 mm)
Two-tier non soft-close = 10-9/32" (261 mm)

15" (381 mm) Min. Cabinet Width opening (15-CR)
18" (457 mm) Min. Cabinet Width opening (18-CR)
Both Models:
21-21/32" (550 mm) Minimum Inside Cabinet Depth
22" (559 mm) Minimum Cabinet Height opening (5PSP)
25" (635 mm) Minimum Cabinet Height opening (5PSP3)

PRODUCT #	SURFACE AREA
5PSP-15-CR	194 in² per shelf
5PSP-18-CR	243 in² per shelf
5PSP-15SC-CR	194 in² per shelf
5PSP-18SC-CR	243 in² per shelf
5PSP3-15SC-CR	194 in² per shelf
5PSP3-18SC-CR	243 in² per shelf

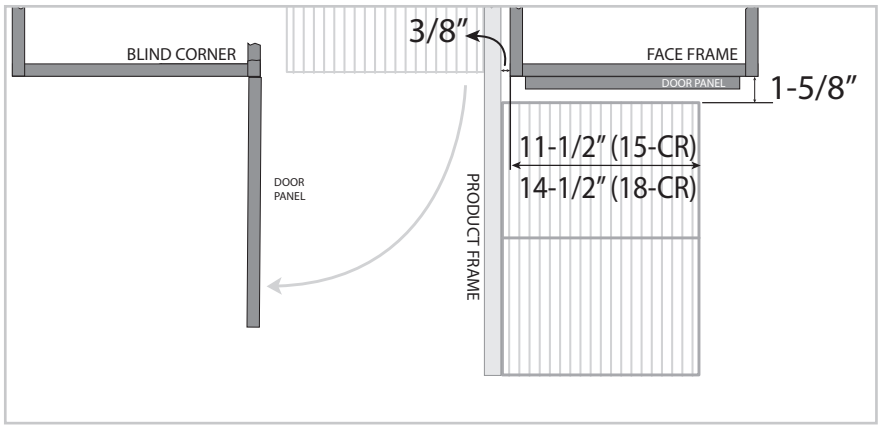

Three-Tier Wire Bottom Blind Corner Optimizer - Non-Handed w/ Soft-Close

PRODUCT	DESCRIPTION	DIMS	MCO	CAB	FINISH	SLP
5PSP3-15SC-CR	Three-Tier Blind Corner Optimizer	26-13/32" (671 mm) W x 20-13/32" (519 mm) D x 23-27/32" (606 mm) H	15" (381 mm)	FHBC42	Chrome	$1,029.50
5PSP3-18SC-CR	Three-Tier Blind Corner Optimizer	32-1/4" (820 mm) W x 20-13/32" (519 mm) D x 23-27/32" (606 mm) H	18" (457 mm)	FHBC45	Chrome	$1,073.00
Two-Tier Wire Bottom Blind Corner Optimizer - Non-Handed w/Soft-Close						
5PSP-15SC-CR	Two-Tier Blind Corner Optimizer	26-13/32" (671 mm) W x 20-13/32" (519 mm) D x 21" (534 mm) H	15" (381 mm)	BC42	Chrome	$870.00
5PSP-18SC-CR	Two-Tier Blind Corner Optimizer	32-1/4" (820 mm) W x 20-13/32" (519 mm) D x 21" (534 mm) H	18" (457 mm)	BC45	Chrome	$971.500
Two-Tier Wire Bottom Blind Corner Optimizer - Non-Handed						
5PSP-15-CR	Two-Tier Blind Corner Optimizer	26-1/4" (667 mm) W x 20" (508 mm) D x 20-3/4" (528 mm) H	15" (381 mm)	BC42	Chrome	$710.50
5PSP-18-CR	Two-Tier Blind Corner Optimizer	32-1/4" (820 mm) W x 20" (508 mm) D x 20-3/4" (528 mm) H	18" (457 mm)	BC45	Chrome	$797.50

53PSP Series

Solid Bottom Blind Corner Optimizer

53PSP-18SC-FOG

- Designed for 15" and 18" blind corner cabinet openings
- Two or three-tier metal frame
- (4) or (6) solid bottom shelves, natural maple, gray or textured linen
- Chrome-plated round wire or orion gray flat wire
- Full-extension, ball-bearing slides w/ soft-close
- Universal mounting, non-handed
- Mounts to cabinet floor
- 27 lb. (per front shelf) and 34 lb. (per back shelf) capacity
- TSCA Title VI compliant

Scan for video

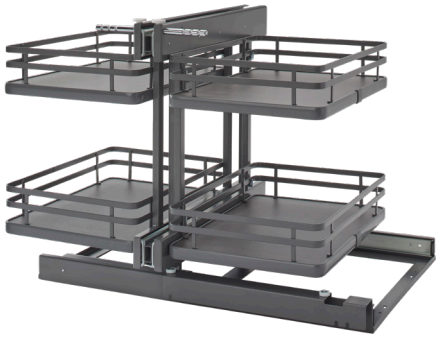

53PSP-15SC-FOG
Two-Tier Blind Corner
Optimizer w/ Soft-Close
(15" version shown)

53PSP-15SC-GR
Two-Tier Blind Corner
Optimizer w/ Soft-Close
(15" version shown)

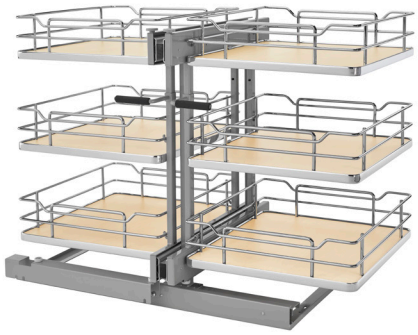

53PSP3-18SC-MP
Three-Tier Blind Corner
Optimizer w/ Soft-Close
(18" version shown)

SPACE BETWEEN SHELVES
Two-tier soft-close = 11" (279 mm)
Three-tier soft-close = 7-15/16" (202 mm)
Two-tier non soft-close = 10-9/32" (261 mm)

15" (381 mm) Min. Cabinet Width opening (15-CR)
18" (457 mm) Min. Cabinet Width opening (18-CR)
Both Models:
21-21/32" (550 mm) Minimum Inside Cabinet Depth
22" (559 mm) Minimum Cabinet Height opening (5PSP)
25" (635 mm) Minimum Cabinet Height opening (5PSP3)

PRODUCT #	SURFACE AREA
53PSP3-15SC-**	194 in² per shelf
53PSP3-18SC-**	243 in² per shelf
53PSP-15SC-**	194 in² per shelf
53PSP-18SC-**	243 in² per shelf

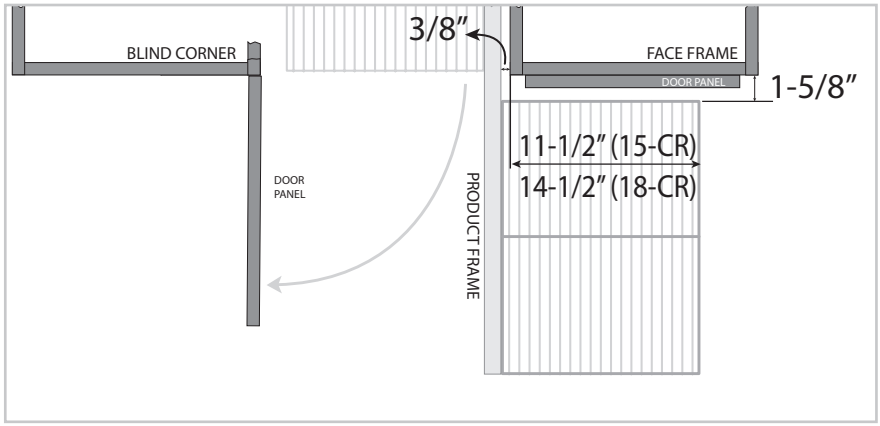

NOTE: ** Insert "MP" for Maple Shelf or "GR" for Gray Shelf

PRODUCT	DESCRIPTION	DIMS	MCO	CAB	Maple	Gray
Two-Tier Solid Bottom Blind Corner Optimizer - Non-Handed w/ Soft-Close						
53PSP-15SC-**	Two-Tier Blind Corner Optimizer	26-1/4" (667 mm) W x 20-1/4" (514 mm) D x 21" (533 mm) H	15" (381 mm)	BC42	$1,134.50	$1,116.50
53PSP-18SC-**	Two-Tier Blind Corner Optimizer	32-1/4" (819 mm) W x 20-1/4" (514 mm) D x 21" (533 mm) H	18" (457 mm)	BC45	$1,197.70	$1,174.50
Three-Tier Solid Bottom Blind Corner Optimizer - Non-Handed w/ Soft-Close						
53PSP3-15SC-**	Three-Tier Blind Corner Optimizer	26-1/4" (667 mm) W x 20-1/4" (514 mm) D x 24" (610 mm) H	15" (381 mm)	FHBC42	$1,388.50	$1,322.40
53PSP3-18SC-**	Three-Tier Blind Corner Optimizer	32-1/4" (819 mm) W x 20-1/4" (514 mm) D x 24" (610 mm) H	18" (457 mm)	FHBC45	$1,475.25	$1,377.50
Two-Tier Solid Bottom Blind Corner Optimizer - Non-Handed w/ Soft-Close						
53PSP-15SC-FOG	Two-Tier Blind Corner Optimizer	26-1/4" (667 mm) W x 20-1/4" (514 mm) D x 21" (533 mm) H	15" (381 mm)	BC42	Orion Gray	$1,131.00
53PSP-18SC-FOG	Two-Tier Blind Corner Optimizer	32-1/4" (819 mm) W x 20-1/4" (514 mm) D x 21" (533 mm) H	18" (457 mm)	BC45	Orion Gray	$1,247.00

582 Series

The 'Curve' Contemporary Blind Corner

- Designed for face frame 18" blind corner cabinet openings (full access 18-7/8" min.)
- Two-tier metal frame
- (2) solid bottom shelves with Stylinox™ anti-skid finish, natural maple
- Chrome round wire accents
- Soft-close slides
- Left or right handed mounting
- Mounts to cabinet door, floor and side walls
- Adjustable mounting brackets
- 60 lb. capacity per shelf
- Shelves operate independently
- TSCA Title VI compliant

COMPAGNUCCI
QUALITY MADE IN ITALY

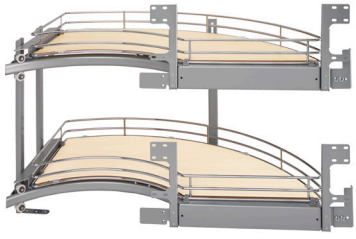

582-18-RMP
Two-Tier Blind Corner Organizer
(Right Door for Blind Left Corner Cabinet Shown)

PRODUCT #	SURFACE AREA
582-18*	775 sq. in.

MINIMUM CABINET OPENING HEIGHT
22" (559 mm)

* 18-7/8" to 19-7/8" FULL ACCESS cabinet opening

Two-Tier Blind Corner

PRODUCT	DESCRIPTION	DIMS	MCO	CAB	FINISH	SLP
582-18-RMP	Right Door Mount for Blind Left Corner Cabinet	35-3/4" (909 mm) W x 18-5/8" (474 mm) D x 20-13/16 - 22-13/16" (529 - 580 mm) H	18" (457 mm) - FF 18-7/8" (479 mm) - FL	BC45	Maple/Chrome	$1,174.50
582-18-LMP	Left Door Mount for Blind Right Corner Cabinet	35-3/4" (909 mm) W x 18-5/8" (474 mm) D x 20-13/16 - 22-13/16" (529 - 580 mm) H	18" (457 mm) - FF 18-7/8" (479 mm) - FL	BC45	Maple/Chrome	$1,174.50

Wire Bottom Two-Tier Blind Corner Optimizer

5707 Series

Soft Close

- Designed for 15" and 18" blind corner cabinet openings
- Two-tier chrome wire bottom shelves
- Full-extension, ball-bearing slides w/ soft-close
- Soft-close slides
- Rear shelves slide forward as cabinet door opens
- Universal mounting, non-handed
- Front shelves feature 23 lb. capacity and rear shelves feature 36 lb. capacity per shelf
- Door tilt adjustment screws for precise alignment

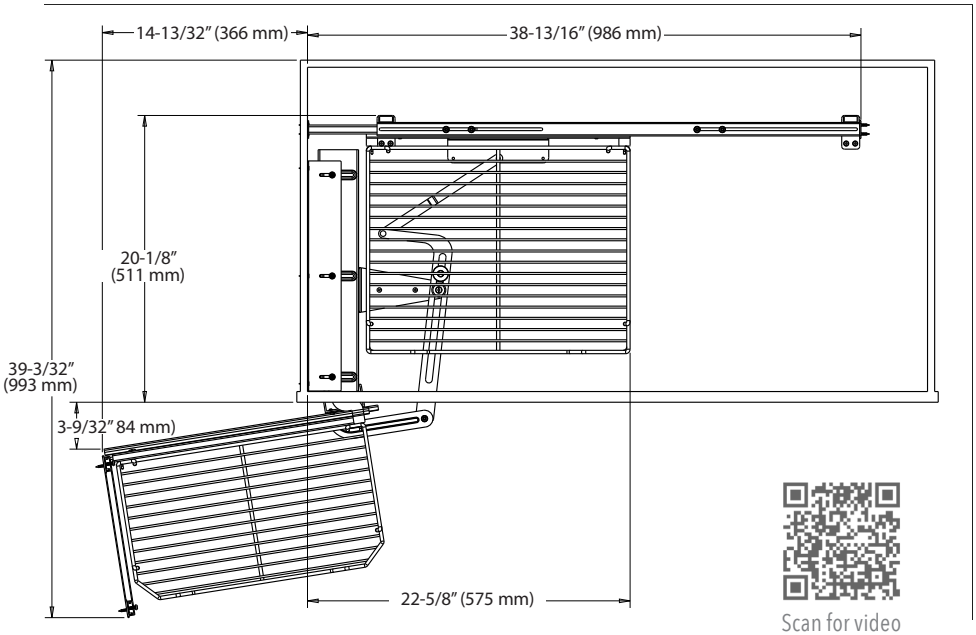

Scan for video

5707-15CR
Wire Bottom Two-Tier
Blind Corner Optimizer
(15" version shown)

PRODUCT #	SURFACE AREA
5707-15CR	834 sq. in.
5707-18CR	941 sq. in.

MINIMUM CABINET OPENING HEIGHT
20-3/4" (527 mm)

Wire Bottom Two-Tier Blind Corner Organizer w/ Soft-Close

PRODUCT	DESCRIPTION	DIMS	MCO	CAB	FINISH	SLP
5707-15CR	Blind Corner Organizer for 15" Opening	See detailed specifications above in illustration	15" (381 mm)	BC42	Chrome	$1,087.50
5707-18CR	Blind Corner Organizer for 18" Opening	See detailed specifications above in illustration	18" (457 mm)	BC45	Chrome	$1,087.50

Lazy Susans

Half-Moon Lazy Susans

4WLS882-35-570

- Designed for 12", 15" and 18" blind corner cabinet openings
- Double solid bottom shelves, natural or wood classic
- Wood classic features solid rim and natural features steam bent rim
- Pivot and slide hardware
- 90° hinge euro brackets and standard mounting brackets
- Chrome-plated shafts
- TSCA Title VI compliant

Polymer

- Designed for 42", 45" and 48" blind corner cabinets
- Single and double solid bottom polymer shelves, almond or white
- Non-handed
- Pivot and slide hardware
- 90° hinge euro brackets and standard mounting brackets
- Chrome-plated shafts

Chrome Wire

- Designed for 18-1/2" min. blind corner cabinet opening
- Single chrome wire bottom shelf
- Ball-bearing slides
- Pivot and slide hardware
- Chrome-plated shafts

6882-33-11-570

5881-33CR-1

See pg. 313 for wood classic, pg. 317 for natural wood and pg. 303 for polymer specification drawings

LD-4NW-882-38-1
Natural Wood Half-Moon
Lazy Susan w/ Pivot and Slide
(38" version shown)

5881-33CR-1
Chrome Wire Half-Moon
Lazy Susan

6881-31-11-52
RAS Polymer Half-Moon
Lazy Susan
(31" White version shown)

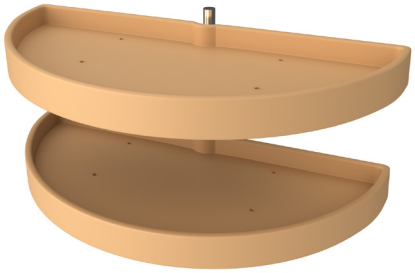

6882-33-15-570
(2) Shelf RAS Polymer Half-Moon
Lazy Susan
(33" Almond version shown)

Chrome Wire Half-Moon

PRODUCT #	SURFACE AREA
5881	289 sq. in.

Wood Half-Moon

PRODUCT #	SURFACE AREA
32" Half-Moon	352 sq. in.
35" Half-Moon	456 sq. in.
38" Half-Moon	501 sq. in.

Polymer Half-Moon

PRODUCT #	SURFACE AREA
31" Half-Moon	274 sq. in.
33" Half-Moon	289 sq. in.
39" Half-Moon	501 sq. in.

** Insert "11" for White Shelf or "15" for Almond Shelf

PRODUCT	DESCRIPTION	DIMS	MCO	CAB	FINISH	SLP
(2) Shelf Wood Classic Half-Moon Lazy Susans w/ Pivot and Slide						
4WLS882-32-570	(2) Shelf Set	32-1/4" (820 mm) W x 14-5/32" (360 mm) D x 16" (407 mm) H	12" (305 mm) - FF 13-1/4" (337 mm) - FL	BC42	Maple	$442.25
4WLS882-35-570	(2) Shelf Set	35" (889 mm) W x 17-5/32" (436 mm) D x 16" (407 mm) H	15" (381 mm) - FF 16-1/4" (413 mm) - FL	BC45	Maple	$517.65
4WLS882-38-570	(2) Shelf Set	37-3/4" (959 mm) W x 20-3/16" (513 mm) D x 16" (407 mm) H	18" (457 mm) - FF 19-1/4" (489 mm) - FL	BC48	Maple	$596.10
Natural Wood Half-Moon Lazy Susans w/ Pivot and Slide						
LD-4NW-882-32-1	(2) Shelf Set	32-1/4" (820 mm) W x 14-1/16" (358 mm) D x 16" (407 mm) H	12" (305 mm) - FF 13-1/4" (337 mm) - FL	BC42	Maple	$493.00
LD-4NW-882-35-1	(2) Shelf Set	35" (889 mm) W x 17-1/16" (434 mm) D x 16" (407 mm) H	15" (381 mm) - FF 16-1/4" (413 mm) - FL	BC45	Maple	$536.50
LD-4NW-882-38-1	(2) Shelf Set	37-5/8" (957 mm) W x 20-1/16" (510 mm) D x 16" (407 mm) H	18" (457 mm) - FF 19-1/4" (489 mm) - FL	BC48	Maple	$609.00
(2) Shelf RAS Polymer Half-Moon Lazy Susan w/ Pivot						
6842-31-**-570	(2) Shelf Set	31-7/16" (799 mm) W x 15-9/32" (389 mm) D x 15-15/16" (405 mm) H	13-1/4" (337 mm) - FF 15" (381 mm) - FL	BC42	Polymer	$227.65
6842-33-**-570	(2) Shelf Set	33" (839 mm) W x 18-11/32" (467 mm) D x 15-15/16" (405 mm) H	16-1/8" (410 mm) - FF 17-7/16" (443 mm) - FL	BC45	Polymer	$233.45
6842-39-**-570	(2) Shelf Set	39-11/32" (1000 mm) W x 21-5/8" (550 mm) D x 15-15/16" (405 mm) H	19-1/4" (489 mm) - FF 20-3/4" (527 mm) - FL	BC48	Polymer	$271.15
RAS Polymer Half-Moon Lazy Susan w/ Pivot and Slide						
6881-31-**-52	Single Shelf	31-7/16" (799 mm) W x 15-1/16" (383 mm) D x 5-1/16" (129 mm) H	13-1/4" (337 mm) - FF 15" (381 mm) - FL	BC42	Polymer	$187.05
6881-33-**-52	Single Shelf	33" (839 mm) W x 18-3/32" (460 mm) D x 5-1/16" (129 mm) H	16-1/8" (410 mm) - FF 17-7/16" (443 mm) - FL	BC45	Polymer	$188.50
6881-39-**-52	Single Shelf	39-11/32" (1000 mm) W x 21-3/8" (544 mm) D x 5-1/16" (129 mm) H	19-1/4" (489 mm) - FF 20-3/4" (527 mm) - FL	BC48	Polymer	$207.35
(2) Shelf RAS Polymer Half-Moon Lazy Susan w/ Pivot and Slides						
6882-31-**-570	(2) Shelf Set	31-7/16" (799 mm) W x 15-1/4" (388 mm) D x 15-15/16" (405 mm) H	13-1/4" (337 mm) - FF 15" (381 mm) - FL	BC42	Polymer	$319.00
6882-33-**-570	(2) Shelf Set	33" (839 mm) W x 18-11/32" (466 mm) D x 15-15/16" (405 mm) H	16-1/8" (410 mm) - FF 17-7/16" (443 mm) - FL	BC45	Polymer	$324.80
6882-39-**-570	(2) Shelf Set	39-11/32" (1000 mm) W x 21-5/8" (549 mm) D x 15-15/16" (405 mm) H	19-1/4" (489 mm) - FF 20-3/4" (527 mm) - FL	BC48	Polymer	$366.85
Chrome Wire Half-Moon Lazy Susan w/ Pivot and Slide						
5881-33CR-1	Single Shelf	33-29/32" (862 mm) W x 18-1/2" (470 mm) D x 5-1/8" (131 mm) H	18-1/2" (469 mm)	BC48	Chrome	$174.00
Hardware						
6882-1008-04-52	Half-Moon Slide Kit (1 Pair)	10-1/2" (267 mm) Extension			Polymer	$65.25

599 Series

Solid Bottom Two-Tier Blind Corner Optimizer

- Designed for 18" blind corner cabinet openings
- Two-tier metal frame
- (4) solid bottom shelves with Stylinox™ anti-skid finish, natural maple
- Chrome round wire accents
- Full-extension, progressive roller slides w/ soft-close
- Left or right handed mounting
- Mounts to cabinet door, floor and side walls
- Adjustable mounting brackets
- 20 lb. capacity per shelf
- Rear shelves slide forward as door opens
- TSCA Title VI compliant

599-18-RMP

599-18-RMP
Solid Bottom Two-Tier Optimizer
(Right 18" version shown)

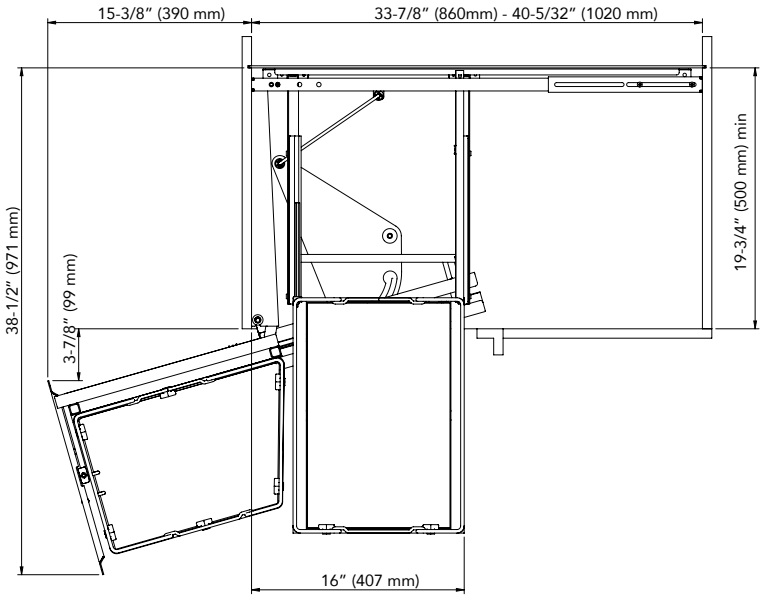

MINIMUM CABINET HEIGHT
26-5/8" (676 mm)

PRODUCT #	SURFACE AREA
599-18-L/RMP	726 sq. in.

NOTE: This product was designed for frameless cabinets. Modifications are required to install in a face frame cabinet. This product **CANNOT** be installed in an inset cabinet.

Solid Bottom Two-Tier Blind Corner Optimizer w/ Soft-Close

PRODUCT	DESCRIPTION	DIMS	MCO	CAB	FINISH	SLP
599-18-LMP	Left Door Mount for Blind Right Corner Cabinet	See Drawings Above	18" (457 mm)	FHBC45	Maple/Chrome	$1,754.50
599-18-RMP	Right Door Mount for Blind Left Corner Cabinet	See Drawings Above	18" (457 mm)	FHBC45	Maple/Chrome	$1,754.50

SINK

Our line of sink base accessories has grown so large that we dedicated an entire chapter to it. We are proud to offer innovative and versatile products, including our tip-out trays, u-shaped pullout shelves and under-sink caddies. These popular accessories feature the same superior quality adherent throughout the Rev-A-Shelf® product line.

Innovation through ***Organization***™

563 Series Towel Holders

Door Mount
- Designed for 30" sink base (butt door) cabinets
- Wire construction, powder-coated white or chrome-plated
- Mounts to cabinet door
- Holds up to (3) dish towels

Pullout
- Designed for base or sink base cabinets
- Wire construction, powder-coated white or chrome-plated
- Full-extension friction slide or 3/4-extension, ball-bearing slide (563-51-C only)
- Universal mounting, non-handed
- Mounts to cabinet side walls
- Holds up to (2) or (3) dish towels

563-47 C

563-32 C
Door Mount Towel Holder
(Chrome finish shown)

563-51 C
2-Prong Pullout Towel Holder
(Chrome finish shown)

Door-Mount Towel Holder

PRODUCT	DESCRIPTION	DIMS	MCO	CAB	FINISH	SLP
563-32	Towel Holder	33-29/32" (862 mm) W x 18-1/2" (470 mm) D x 5-1/8" (131 mm) H	13" (330 mm) - FF 13" (330 mm) - FL	SB30	White	$6.50
563-32 C	Towel Holder	12-3/4" (324 mm) W x 2-3/4" (70 mm) D x 6" (153 mm) H	13" (330 mm) - FF 13" (330 mm) - FL	SB30	Chrome	$6.50
Pullout Towel Holder w/ Ball-bearing Slide						
563-51-C	2-Prong Towel Holder	4-1/16" (104 mm) W x 12-7/8" (328 mm) D x 1-1/2" (39 mm) H	5" (127 mm)		Chrome	$36.25
Pullout Towel Holder w/ Friction Slide						
563-47	3-Prong Towel Holder	5" (127 mm) W x 17-3/4" (451 mm) D x 1-13/32" (36 mm) H	6" (152 mm)		White	$37.70
563-47 C	3-Prong Towel Holder	5" (127 mm) W x 17-3/4" (451 mm) D x 1-13/32" (36 mm) H	6" (152 mm)		Chrome	$37.70

Door-Mount Paper Towel Holder

4SBPT Series

- Designed for 36" sink base cabinets
- Lift-out design to replace your paper towels
- Natural maple construction with semi-gloss finish
- Patented adjustable door-mount brackets that provide up to 5" of adjustability (US Patent No. 7,204,569)
- Tear bar ensures an easy one-handed tear every time
- Lower shelf for additional storage
- Mounts to cabinet door
- TSCA Title VI compliant

Lower shelf for additional storage

Door-Mount Paper Towel Holder

PRODUCT	DESCRIPTION	DIMS	MCO	CAB	FINISH	SLP
4SBPT-18-1	Paper Towel Holder	13-1/2" (343 mm) W x 7-11/32" (187 mm) D x 18-1/2" (470 mm) H	14-3/8" (366 mm)	SB36	Maple	$154.15

5CCSO Series

Door-Mount Cleaning Caddy

- Designed for 36" sink base cabinets
- Single polypropylene container with handle - black, orion gray or white
- Mounts to cabinet door

5CCSO12-13-1

BAR WIDTH
13" (330 mm)

Scan for video

5CCSO12-18-1
Cleaning Caddy
(Black finish shown)

5CCSO12-11-1
Cleaning Caddy
(White finish shown)

Included mounting bar for installation on a 5-panel door

Wire Door-Mount Cleaning Caddy

PRODUCT	DESCRIPTION	DIMS	MCO	CAB	FINISH	SLP
5CCSO12-11-1	Cleaning Caddy	9-3/4 - 13" (248 - 331 mm) W x 9-3/4" (248 mm) D x 8-1/4" (210 mm) H	15" (305 mm)	SB36	White	$20.30
5CCSO12-13-1	Cleaning Caddy	9-3/4 - 13" (248 - 331 mm) W x 9-3/4" (248 mm) D x 8-1/4" (210 mm) H	15" (305 mm)	SB36	Orion Gray	$20.30
5CCSO12-18-1	Cleaning Caddy	9-3/4 - 13" (248 - 331 mm) W x 9-3/4" (248 mm) D x 8-1/4" (210 mm) H	15" (305 mm)	SB36	Black	$20.30

Cleaning Caddy Pullout

5CC Series

5CC-915S-18-1

- Designed for 30" sink base cabinets
- Single polypropylene container with handle - black, orion gray or white
- Full-extension, undermount slides w/ soft-close
- Mounts to cabinet floor
- (2) 1 L spray bottles with removable storage rack
- Door-mount kit available (sold separately)

5CC-915S-13-1
Cleaning Caddy Pullout
(Orion gray finish shown)

5CC-915S-11-1
Cleaning Caddy Pullout
(White finish shown)

Scan for video

Sink Base 2-in-1 Polyethylene Cleaning Pullout w/ (2) Spray Bottles and Soft-Close

PRODUCT	DESCRIPTION	DIMS	MCO	CAB	FINISH	SLP
5CC-915S-11-1	Cleaning Caddy Pullout	9-1/4" (235 mm) W x 18-19/32" (473 mm) D x 18-19/32" (472 mm) H	9-1/2" (241 mm)	SB30	White	$165.30
5CC-915S-13-1	Cleaning Caddy Pullout	9-1/4" (235 mm) W x 18-19/32" (473 mm) D x 18-19/32" (472 mm) H	9-1/2" (241 mm)	SB30	Orion Gray	$165.30
5CC-915S-18-1	Cleaning Caddy Pullout	9-1/4" (235 mm) W x 18-19/32" (473 mm) D x 18-19/32" (472 mm) H	9-1/2" (241 mm)	SB30	Black	$165.30
Accessories						
5WB-DMKIT	Door Mount Kit				Chrome	$39.15

SBDTF Series

Flexible Drip Tray

- Designed for 27" to 42" sink base cabinets
- Flexible, durable and easy-to-clean TPE construction, gray
- Trimmable
- Drop-in installation
- Funnels excess water out the front of your cabinet
- Can be installed in existing cabinet construsction

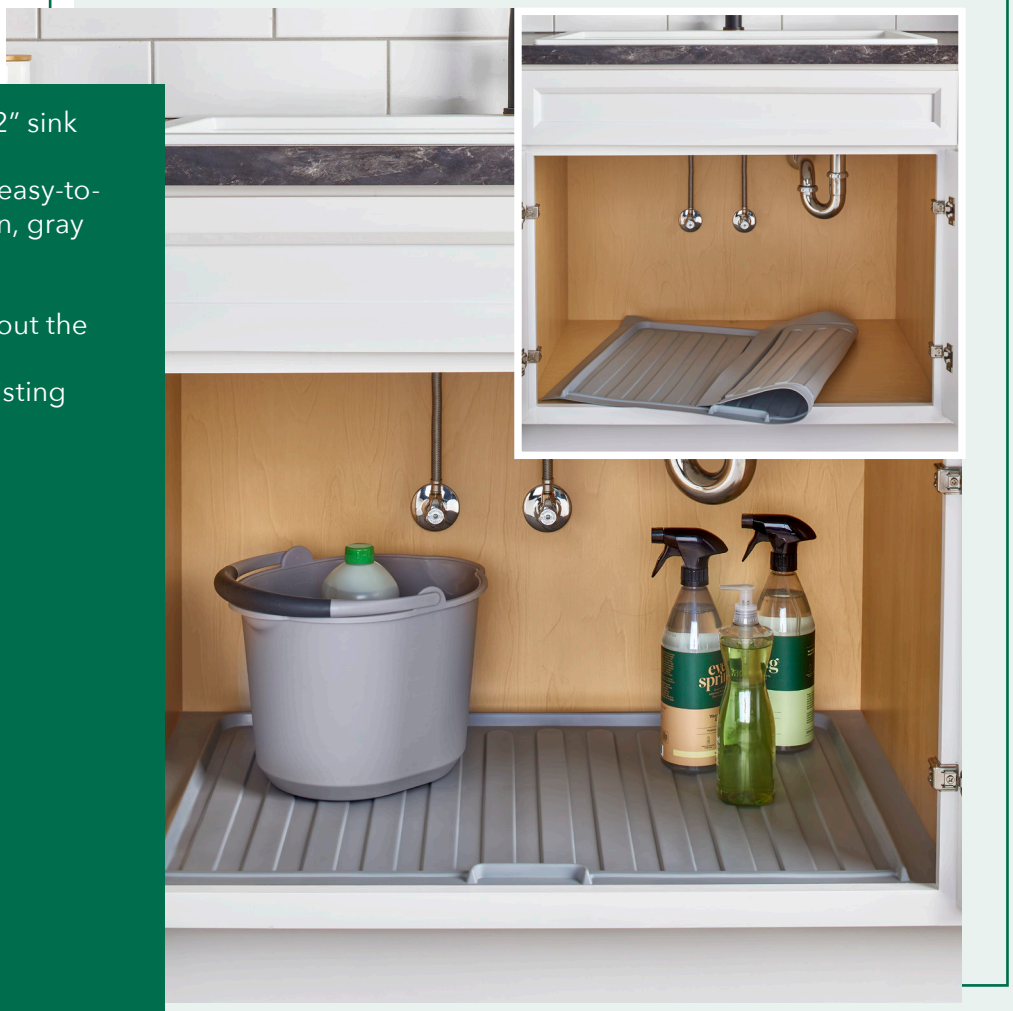

SBDTF-3336-14-1

See page 254 for vanity version

Scan for video

Flexible, durable, and easy-to-clean TPE construction. Funnels excess water out the front of your cabinet.

Flexible Drip Tray

PRODUCT	DESCRIPTION	DIMS	CAB	FINISH	SLP
SBDTF-2730-14-1	Drip Tray	25-1/2 - 28-1/2" (648 - 724 mm) W x 21-1/2 - 23-1/4" (547 - 591 mm) D x 3/4" (20 mm) H	SB-27-30	Gray	$63.05
SBDTF-3336-14-1	Drip Tray	31-1/2 - 34-1/2" (801 - 877 mm) W x 21-1/2 - 23-1/4" (547 - 591 mm) D x 3/4" (20 mm) H	SB-33-36	Gray	$73.95
SBDTF-3942-14-1	Drip Tray	37-1/2 - 40-1/2" (953 - 1029 mm) W x 21-1/2 - 23-3/4" (547 - 604 mm) D x 3/4" (20 mm) H	SB-39-42	Gray	$81.20

Polymer Drip Tray

SBDT Series

- Designed for installation in new 30", 36" and 42" sink base cabinet construction
- Can be cut down to fit a 27", 33" or 39" cabinet
- Protects the bottom of your cabinet from spills
- Funnels excessive water out of the front of your cabinet
- Orion gray, almond or metallic silver

Tray Capacity	
SBDT-2730	1-1/2 qt.
SBDT-3336	1-3/4 qt.
SBDT-3942	2-1/5 qt.

OG: Orion Gray, S: Metallic Silver, A: Almond

See page 255 for vanity version

Drip Tray

PRODUCT	DESCRIPTION	DIMS	MIN TRIM	CAB	FINISH	SLP
SBDT-2730-OG-1	Drip Tray	28-1/2" (724 mm) W x 23-1/4" (591 mm) D x 3/4" (19 mm) H	25-1/2" (648 mm) x 21-1/2" (546 mm)	SB27-30	Orion Gray	$63.65
SBDT-2730-A-1	Drip Tray	28-1/2" (724 mm) W x 23-1/4" (591 mm) D x 3/4" (19 mm) H	25-1/2" (648 mm) x 21-1/2" (546 mm)	SB27-30	Almond	$63.65
SBDT-2730-S-1	Drip Tray	28-1/2" (724 mm) W x 23-1/4" (591 mm) D x 3/4" (19 mm) H	25-1/2" (648 mm) x 21-1/2" (546 mm)	SB27-30	Metallic Silver	$63.80
SBDT-3336-OG-1	Drip Tray	34-1/2" (876 mm) W x 23-1/4" (591 mm) D x 3/4" (19 mm) H	31-1/2" (800 mm) x 21-1/2" (546 mm)	SB33-36	Orion Gray	$75.40
SBDT-3336-A-1	Drip Tray	34-1/2" (876 mm) W x 23-1/4" (591 mm) D x 3/4" (19 mm) H	31-1/2" (800 mm) x 21-1/2" (546 mm)	SB33-36	Almond	$71.05
SBDT-3336-S-1	Drip Tray	34-1/2" (876 mm) W x 23-1/4" (591 mm) D x 3/4" (19 mm) H	31-1/2" (800 mm) x 21-1/2" (546 mm)	SB33-36	Metallic Silver	$75.40
SBDT-3942-OG-1	Drip Tray	40-1/2" (1029 mm) W x 23-1/4" (591 mm) D x 3/4" (19 mm) H	37-1/2" (953 mm) x 21-1/2" (546 mm)	SB39-42	Orion Gray	$82.65
SBDT-3942-A-1	Drip Tray	40-1/2" (1029 mm) W x 23-1/4" (591 mm) D x 3/4" (19 mm) H	37-1/2" (953 mm) x 21-1/2" (546 mm)	SB39-42	Almond	$81.20
SBDT-3942-S-1	Drip Tray	40-1/2" (1029 mm) W x 23-1/4" (591 mm) D x 3/4" (19 mm) H	37-1/2" (953 mm) x 21-1/2" (546 mm)	SB39-42	Metallic Silver	$82.65

RL Series

Rev-A-Lock® Cabinet Security

- Designed for wood, glass, metal and particleboard cabinets
- White polymer construction, additional colors available with bulk order
- Powerful magnetic locks to keep doors closed
- Unlocking key that disables lock only when you want

Scan for video

RAL-101-1
Rev-A-Lock® Starter Set
(Polymer finish shown)

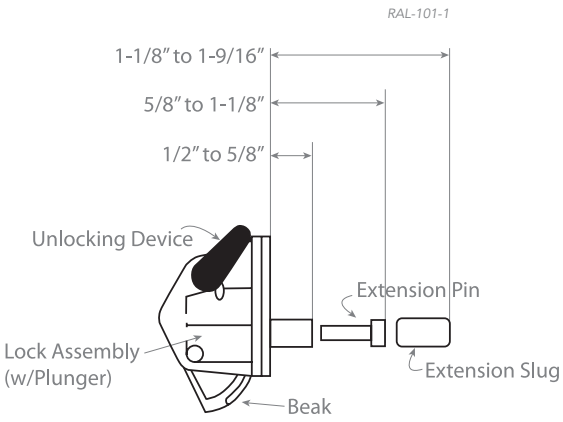

NOTE: The lock will install on thickness of 1/2" (13 mm) to 1-9/16" (40 mm) and operate through wood, glass, metal and particle board.

- Additional colors available via special order (min.500). Contact your Sales Rep for more information.

Rev-A-Lock® Cabinet Security

PRODUCT	DESCRIPTION	DIMS	FINISH	SLP
RAL-101-1	Starter Set (5 Locks & 2 Keys)	1-7/32" (31 mm) W x 1-5/8" (42 mm) D x 1-13/32" (36 mm) H	Polymer	$68.15
RL-201-1	Lock Assembly	1-7/32" (31 mm) W x 1-5/8" (42 mm) D x 1-13/32" (36 mm) H	Polymer	$11.60
RL-202-1	Magnetic Key	1-15/32" (38 mm) W x 1-15/32" (38 mm) D x 1-1/4" (32 mm) H	Polymer	$15.95

Door Storage Tray Set

6230 Series

- (2) or (5) 8", 14" and 20" trays
- Glossy polymer construction, almond or white
- Mounts to cabinet door
- Screw-in clips included

6232-14-11-52

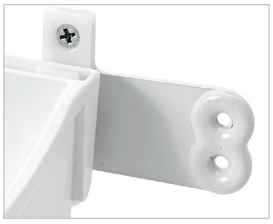

Bracket extension kit, sold separately

6232-14-11-52
Polymer Door Storage Tray
(14" version shown)

NOTE: **Insert 11 for White finish or 15 for Almond finish

PRODUCT	DESCRIPTION	DIMS	MCO	CAB	FINISH	SLP
Door Storage Tray Set w/ Screw-In Clips						
6232-08-**-52	Trays w/ Screw-In Clips	7-7/8" (201 mm) W x 4-1/4" (108 mm) D x 3-9/16" (91 mm) H	9" (229 mm) - FF 9" (229 mm) - FL	B12	Polymer	$23.20/set
6232-14-**-52	Trays w/ Screw-In Clips	13-3/4" (350 mm) W x 4-1/4" (108 mm) D x 3-9/16" (91 mm) H	14-1/2" (368 mm) - FF 14-1/2" (368 mm) - FL	B18	Polymer	$27.55/set
6232-20-**-52	Trays w/ Screw-In Clips	19-3/4" (502 mm) W x 4-1/4" (108 mm) D x 3-9/16" (91 mm) H	20-1/2" (521 mm) - FF 20-1/2" (521 mm) - FL	B24	Polymer	$34.80/set
(5) Tray Sets with Clips						
6235-08-**-52	Trays w/ Screw-In Clips	7-7/8" (201 mm) W x 4-1/4" (108 mm) D x 3-9/16" (91 mm) H	9" (229 mm) - FF 9" (229 mm) - FL	B12	Polymer	$56.55/set
6235-14-**-52	Trays w/ Screw-In Clips	13-3/4" (350 mm) W x 4-1/4" (108 mm) D x 3-9/16" (91 mm) H	14-1/2" (368 mm) - FF 14-1/2" (368 mm) - FL	B18	Polymer	$68.15/set
6235-20-**-52	Trays w/ Screw-In Clips	19-3/4" (502 mm) W x 4-1/4" (108 mm) D x 3-9/16" (91 mm) H	20-1/2" (521 mm) - FF 20-1/2" (521 mm)- FL	B24	Polymer	$85.55/set
Accessories						
6230-MB-11-1	Mounting Bracket Extension Kit				White	$10.90

LD-6591 Series

Deluxe Sink Front Tip-Out Trays

- 22", 24" and 30-1/2" trays, almond or white
- Bulk trays available
- Mounts to sink front panels
- (1) pair of 45-degree LD pivot hinges

LD-6591-24-15-1

LD-6591-22-11-1
22" Deluxe Tip-Out Tray w/ Hinges
(White finish shown)

LD-6591-30-15-1
30" Deluxe Tip-Out Tray w/ Hinges
(Almond finish shown)

Scan for video

NOTE: Sink Front Trays can also be installed into Vanity Sink Base Cabinets! **Insert 11 for White finish or 15 for Almond finish

Deluxe Tip-Out Tray System (Std./Acc.)			
PRODUCT	**DESCRIPTION**	**DIMS**	**SLP**
LD-6591-22-**-1	Deluxe Tip-Out Tray w/ 45° Hinges	22" (559 mm) W x 2-1/8" (54 mm) D x 3-13/16" (97 mm) H	$22.45/set
LD-6591-24-**-1	Deluxe Tip-Out Tray w/ 45° Hinges	24-5/16" (618 mm) W x 2-1/8" (54 mm) D x 3-13/16" (97 mm) H	$23.95/set
LD-6591-30-**-1	Deluxe Tip-Out Tray w/ 45° Hinges	30-7/16" (774 mm) W x 2-1/8" (54 mm) D x 3-13/16" (97 mm) H	$26.10/set
Bulk Deluxe Tip-Out Trays Only			
LD-6591-22-**-10	(10) Deluxe Tip-Out Trays Only	22" (559 mm) W x 2-1/8" (54 mm) D x 3-13/16" (97 mm) H	$10.90 ea.
LD-6591-24-**-10	(10) Deluxe Tip-Out Trays Only	24-5/16" (618 mm) W x 2-1/8" (54 mm) D x 3-13/16" (97 mm) H	$11.60 ea.
LD-6591-30-**-10	(10) Deluxe Tip-Out Trays Only	30-7/16" (774 mm) W x 2-1/8" (54 mm) D x 3-13/16" (97 mm) H	$13.80 ea.

Sink Front Tip-Out Trays

65** Series

- 36" or 72" trays, almond or white
- Trimmable to desired length
- Molded polymer end caps
- Key-shaped holes for easy removal and cleaning
- Can be used as a tip-out tray or a spice rack

6551-36-11-52

6551-36-11-50
36" Tip-Out Tray w/ Hinges & End Caps
(White finish shown)

6551-36-15-52
36" Tip-Out Tray w/ Hinges & End Caps
(Almond finish shown)

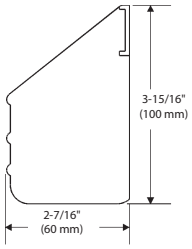

Scan for video

NOTE: **6552 Series End Cap/Hinge sets are individually poly-bagged, bulk packed.
Sink Front Trays can also be installed into Vanity Sink Base Cabinets! **Insert 11 for White finish or 15 for Almond finish

PRODUCT	DESCRIPTION	DIMS	FINISH	SLP
36" Tip-Out Tray with Hinges and End Caps				
6551-36-**-52	1 Tray - 2 Pair Hinges & End Caps	36" (915 mm) W x 2-7/16" (62 mm) D x 3-15/16" (101 mm) H	Polymer	$50.00
6551-36-**-50	1 Tray - 1 Pair Hinges & End Caps	36" (915 mm) W x 2-7/16" (62 mm) D x 3-15/16" (101 mm) H	Polymer	$34.05
6551-36-**-ETH	1 Tray - 1 Pair Hinges & End Caps	36" (915 mm) W x 2-7/16" (62 mm) D x 3-15/16" (101 mm) H	Polymer	$48.55
Bulk Components				
6552-97-**-4	(40) Hinges, End Caps, Inst. & Adhesive		Polymer	$11.15 pr.
6552-ETH-**-10	(10) Hinges, End Caps, Inst. & Adhesive		Polymer	$23.50 pr.
6571-36-**-4	(20) Trays ONLY	36" (915 mm) W x 2-7/16" (62 mm) D x 3-15/16" (101 mm) H	Polymer	$13.80 ea.
6571-72-**-4	(20) Trays ONLY	72" (1829 mm) W x 2-7/16" (62 mm) D x 3-15/16" (101 mm) H	Polymer	$33.35 ea.
Components for Tip-Out or Spice Tray Applications				
ST-97-**-4	(40) End Caps, Screws			$6.50 pr.
6571-60-52	Tube of Adhesive	2 Grams		$5.80
6571-61-52	Bottle of Adhesive	1 Ounce		$21.75

65** Series

Sink Front Tip-Out Trays

6572-11-11-52
Standard and Accessory Tray
(White finish shown)

- (1) or (20) 11" or 14" tray sets
- Glossy polymer construction, almond or white
- Each set: (1) standard tray, (1) accessory tray with ring holder and soap dish
- Mounts to sink front panels
- (2) pair of Self-Holdin® hinges (US Patent No. 7,635,171)
- Bulk (40) 11" or 14" standard or accessory trays ONLY available

6572-11-11-52

NOTE: Sink Front Trays can also be installed into Vanity Sink Base Cabinets! **Insert 11 for White finish or 15 for Almond finish

Sink Front Tip-Out Tray System (Std./Acc.)				
PRODUCT	DESCRIPTION	DIMS	FINISH	SLP
6572-11-**-52	Std/Acc Trays with Hinges	11" (280 mm) W x 2-1/8" (54 mm) D x 3-13/16" (97 mm) H	Polymer	$34.05
6572-14-**-52	Std/Acc Trays with Hinges	14" (356 mm) W x 2-1/8" (54 mm) D x 3-13/16" (97 mm) H	Polymer	$34.05
(20) False Front Tip-Out Tray System (Std./Acc.)				
6572-11-**-4	(20) Std/Acc Trays with Hinges	11" (280 mm) W x 2-1/8" (54 mm) D x 3-13/16" (97 mm) H	Polymer	$28.25 ea.
6572-14-**-4	(20) Std/Acc Trays with Hinges	14" (356 mm) W x 2-1/8" (54 mm) D x 3-13/16" (97 mm) H	Polymer	$28.25 ea.
(40) False Front Tip-Out Trays				
6581-11-**-4	(40) Standard Trays	11" (280 mm) W x 2-1/8" (54 mm) D x 3-13/16" (97 mm) H	Polymer	$6.50 ea.
6581-14-**-4	(40) Standard Trays	14" (356 mm) W x 2-1/8" (54 mm) D x 3-13/16" (97 mm) H	Polymer	$6.50 ea.
6591-11-**-4	(40) Accessory Trays	11" (280 mm) W x 2-1/8" (54 mm) D x 3-13/16" (97 mm) H	Polymer	$5.80 ea.
6591-14-**-4	(40) Accessory Trays	14" (356 mm) W x 2-1/8" (54 mm) D x 3-13/16" (97 mm) H	Polymer	$5.80 ea.

Tip-Out Trays with Tab Stops

- Affordable alternative to the conventional tray systems
- Features high-resistant tabs to prevent breaking

6562-11-11-52
Tray with Tab Stops
(White finish shown)

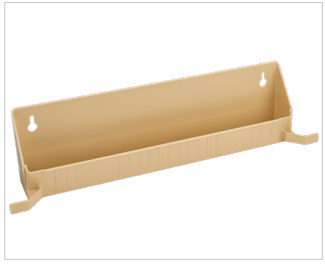

6562-14-15-52
Tray with Tab Stops
(Almond finish shown)

**Insert 11 for White finish or 15 for Almond finish

Trays w/ Tab Stops				
PRODUCT	DESCRIPTION	DIMS	FINISH	SLP
6562-11-**-52	11" Trays with Tab Stops	12-1/2" (318 mm) W x 3-1/32" (77 mm) D x 3-13/16" (97 mm) H	Polymer	$22.30
6562-14-**-52	14" Trays with Tab Stops	15-1/2" (394 mm) W x 3-1/32" (77 mm) D x 3-13/16" (97 mm) H	Polymer	$21.00
(40) Trays w/ Tab Stops				
6561-11-**-4	11" Trays with Tab Stops	12-1/2" (318 mm) W x 3-1/32" (77 mm) D x 3-13/16" (97 mm) H	Polymer	$6.50 ea.
6561-14-**-4	14" Trays with Tab Stops	15-1/2" (394 mm) W x 3-1/32" (77 mm) D x 3-13/16" (97 mm) H	Polymer	$7.25 ea.

Slim Sink Front Tip-Out Trays

654* Series

6541-36-11-4

- 11″ or 14″ solid trays, almond or white
- 36″ extruded tray, almond or white
- Designed to accommodate minimum clearance openings
- Perfect for hiding sponges and scouring pads out of sight
- (2) pair of 45-degree LD pivot hinges

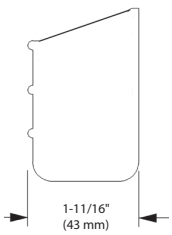

Scan for video

**Insert 11 for White finish or 15 for Almond finish

PRODUCT	DESCRIPTION	DIMS	FINISH	SLP
(2) Slim Series Tip-Out Trays w/ (2) pr. of Hinges				
6542-11-**-52	Tip-Out Tray w/ Hinges	11" (280 mm) W x 1-11/16" (42 mm) D x 3-15/16" (100 mm) H	Polymer	$31.90
6542-14-**-52	Tip-Out Tray w/ Hinges	14" (360 mm) W x 1-11/16" (42 mm) D x 3-15/16" (100 mm) H	Polymer	$37.00
(20) Two-Tray Sets w/ (40) Hinges				
6542-11-**-4	Tip-Out Trays w/ Hinges	11" (280 mm) W x 1-11/16" (42 mm) D x 3-15/16" (100 mm) H	Polymer	$29.00 ea.
6542-14-**-4	Tip-Out Trays w/ Hinges	14" (360 mm) W x 1-11/16" (42 mm) D x 3-15/16" (100 mm) H	Polymer	$31.20 ea.
Kits and Components - (1) Tray, (2) End Caps, (1) pr. of Hinges (1) Tube of Glue				
6541-36-**-52	Tray, End Caps, 2 pr. Hinges	36" (914 mm) W x 1-11/16" (42 mm) D x 3-15/16" (100 mm) H	Polymer	$47.15
6541-36-**-50	Tray, End Caps, 1 pr. Hinges	36" (914 mm) W x 1-11/16" (42 mm) D x 3-15/16" (100 mm) H	Polymer	$29.70
6541-36-**-ETH	Tray, End Caps, 1 pr. Hinges	36" (914 mm) W x 1-11/16" (42 mm) D x 3-15/16" (100 mm) H	Polymer	$46.40
Bulk Components				
6541-36-**-4	(20) Trays only	36" (914 mm) W x 1-11/16" (42 mm) D x 3-15/16" (100 mm) H	Polymer	$15.95 ea.
6542-97-**-4	(40) Hinges & End Caps Sets		Polymer	$12.30 ea.
6542-ETH-**-10	(10) Hinges & End Caps Sets		Polymer	$22.45 ea.

65**/6581 Series

Tip-Out Tray Sets w/ Soft-Close

- 25", 28", 31" and 36" trays, almond, white or stainless steel
- Soft-close hinges
- Only 3/4" clearance on either side needed for use
- 50-degree opening
- Stiffening ribs provide extra stability and eliminate side play
- Easy installation
- (US Patent No. 7,635,171)
- (US Patent No. 20,120,260,461A)

6581-31SC-52

Scan for video

6541-36SC-11-50
Slim Sink Front Tip-Out Tray
w/ Soft-Close Hinges
(White finish shown)

6551-36SC-11-50
Sink Front Tip-Out Tray
w/ Soft-Close Hinges
(Almond finish shown)

NOTE: To order stainless steel trays with TABS 3-1/4" (83 mm) D order 6591-**-6 (Call for pricing).

PRODUCT	DESCRIPTION	DIMS	FINISH	SLP
Polymer Slim Series Sink Front Tip-Out Tray System w/ Soft-Close				
6541-36SC-11-50	36" Tray	36" (915 mm) W x 2-5/8" (67 mm) D x 3-13/16" (98 mm) H	White	$44.95
6541-36SC-15-50	36" Tray	36" (915 mm) W x 2-5/8" (67 mm) D x 3-13/16" (98 mm) H	Almond	$44.95
Polymer Tip-Out Trays w/ Soft-Close Hinges				
6551-36SC-11-50	36" Tray	36" (915 mm) W x 2-5/8" (67 mm) D x 3-15/16" (101 mm) H	White	$46.85
6551-36SC-15-50	36" Tray	36" (915 mm) W x 2-5/8" (67 mm) D x 3-15/16" (101 mm) H	Almond	$43.50
Stainless Steel Tip-Out Trays w/ Soft-Close Hinges				
6581-25SC-52	25" Stainless Steel Tray	25" (635 mm) W x 2-5/8" (67 mm) D x 3" (77 mm) H	Stainless Steel	$70.35
6581-28SC-52	28" Stainless Steel Tray	28" (712 mm) W x2-5/8" (67 mm) D x 3" (77 mm) H	Stainless Steel	$73.20
6581-31SC-52	31" Stainless Steel Tray	31" (788 mm) W x 2-5/8" (67 mm) D x 3" (77 mm) H	Stainless Steel	$79.00

Stainless Steel Tip-Out Tray Sets

65** Series

- 10" to 31" trays, stainless steel
- Designed to accommodate minimum clearance openings for large sink applications
- Compatible with Rev-A-Shelf's patented Self-Holdin® hinges (sold separately) (US Patent No. 7,635,171)
- Custom logo or trade name stamping also available (80 tray minimum plus die cost)

NOTE: * Insert "8" for a 2-1/8" Deep Tray or a "4" for a Slim Series, 1-11/16". Ex 6541-10-4 or 6581-10-4 - To order INDIVIDUAL packed trays with (1) pair of hinges, apply the same depth notation (4 or 8) and change the last sequence of numbers to -52. Ex. 6541-10-52 or 6581-10-52. (Call for pricing)
US PATENT NO: 7,635,171

(20) Stainless Steel Trays w/ (20 pr.) Hinges

PRODUCT	DESCRIPTION	DIMS	FINISH	SLP
65*1-10-4	10" Tip-Out Tray Sets	10" (254 mm) W x See Note for Depth x 3" (77 mm) H	Stainless Steel	$31.20 ea.
65*1-11-4	11-1/4" Tip-Out Tray Sets	11-1/4" (286 mm) W x See Note for Depth x 3" (77 mm) H	Stainless Steel	$26.85 ea.
65*1-13-4	13" Tip-Out Tray Sets	13" (330 mm) W x See Note for Depth x 3" (77 mm) H	Stainless Steel	$28.25 ea.
65*1-14-4	14-1/4" Tip-Out Tray Sets	14-1/4" (362 mm) W x See Note for Depth x 3" (77 mm) H	Stainless Steel	$29.70 ea.
65*1-16-4	16" Tip-Out Tray Sets	16" (407 mm) W x See Note for Depth x 3" (77 mm) H	Stainless Steel	$30.45 ea.
65*1-19-4	19" Tip-Out Tray Sets	19" (483 mm) W x See Note for Depth x 3" (77 mm) H	Stainless Steel	$31.90 ea.
65*1-22-4	22" Tip-Out Tray Sets	22" (559 mm) W x See Note for Depth x 3" (77 mm) H	Stainless Steel	$33.35ea.
65*1-25-4	25" Tip-Out Tray Sets	25" (635 mm) W x See Note for Depth x 3" (77 mm) H	Stainless Steel	$36.25 ea.
65*1-28-4	28" Tip-Out Tray Sets	28" (711 mm) W x See Note for Depth x 3" (77 mm) H	Stainless Steel	$39.15 ea.
65*1-31-4	31" Tip-Out Tray Sets	31" (788 mm) W x See Note for Depth x 3" (77 mm) H	Stainless Steel	$40.60 ea.
(20) Stainless Steel Trays Only				
65*1-10-5	10" Tip-Out Tray	10" (254 mm) W x See Note for Depth x 3" (77 mm) H	Stainless Steel	$18.15 ea.
65*1-11-5	11-1/4" Tip-Out Tray	11-1/4" (286 mm) W x See Note for Depth x 3" (77 mm) H	Stainless Steel	$19.55 ea.
65*1-13-5	13" Tip-Out Tray	13" (330 mm) W x See Note for Depth x 3" (77 mm) H	Stainless Steel	$20.30 ea.
65*1-14-5	14-1/4" Tip-Out Tray	14-1/4" (362 mm) W x See Note for Depth x 3" (77 mm) H	Stainless Steel	$19.55 ea.
65*1-16-5	16" Tip-Out Tray	16" (407 mm) W x See Note for Depth x 3" (77 mm) H	Stainless Steel	$20.30 ea.
65*1-19-5	19" Tip-Out Tray	19" (483 mm) W x See Note for Depth x 3" (77 mm) H	Stainless Steel	$21.00 ea.
65*1-22-5	22" Tip-Out Tray	22" (559 mm) W x See Note for Depth x 3" (77 mm) H	Stainless Steel	$22.45 ea.
65*1-25-5	25" Tip-Out Tray	25" (635 mm) W x See Note for Depth x 3" (77 mm) H	Stainless Steel	$24.65 ea.
65*1-28-5	28" Tip-Out Tray	28" (711 mm) W x See Note for Depth x 3" (77 mm) H	Stainless Steel	$27.55 ea.
65*1-31-5	31" Tip-Out Tray	31" (788 mm) W x See Note for Depth x 3" (77 mm) H	Stainless Steel	$30.45 ea.
(20) Stainless Steel Tray w/ Tabs				
6591-10-6	10" Tip-Out Trays	11" (279 mm) W x 3-1/8" (79 mm) D x 3" (76 mm) H	Stainless Steel	$18.15 ea.
6591-11-6	11-1/4" Tip-Out Trays	12" (305 mm) W x 3-1/8" (79 mm) D x 3" (76 mm) H	Stainless Steel	$19.55 ea.
6591-13-6	13" Tip-Out Trays	14" (356 mm) W x 3-1/8" (79 mm) D x 3" (76 mm) H	Stainless Steel	$19.55 ea.
6591-14-6	14-1/4" Tip-Out Trays	15" (381 mm) W x 3-1/8" (79 mm) D x 3" (76 mm) H	Stainless Steel	$23.20 ea.
6591-16-6	16" Tip-Out Trays	17" (432 mm) W x 3-1/8" (79 mm) D x 3" (76 mm) H	Stainless Steel	$23.95 ea.
6591-19-6	19" Tip-Out Trays	20" (508 mm) W x 3-1/8" (79 mm) D x 3" (76 mm) H	Stainless Steel	$24.65 ea.
6591-22-6	22" Tip-Out Trays	23" (584 mm) W x 3-1/8" (79 mm) D x 3" (76 mm) H	Stainless Steel	$26.85 ea.
6591-25-6	25" Tip-Out Trays	26" (660 mm) W x 3-1/8" (79 mm) D x 3" (76 mm) H	Stainless Steel	$29.00 ea.
6591-28-6	28" Tip-Out Trays	29" (737 mm) W x 3-1/8" (79 mm) D x 3" (76 mm) H	Stainless Steel	$31.20 ea.
6591-31-6	31" Tip-Out Trays	32" (813 mm) W x 3-1/8" (79 mm) D x 3" (76 mm) H	Stainless Steel	$33.35 ea.

LD-0220 Series

Soft-Close Pivot Hinge

- 50-degree opening
- Soft-close hinge
- Stiffening ribs provide extra stability and eliminate side play
- (US Patent No. 7,635,171)
- (US Patent No. 20,120,260,461A)

LD-0220-50SC-40

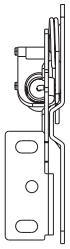

SOFT-CLOSE TIP-OUT HINGE

LD-0220-50SCFO-40

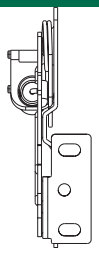

SOFT-CLOSE TIP-OUT HINGE FOR FULL OVERLAY DOOR

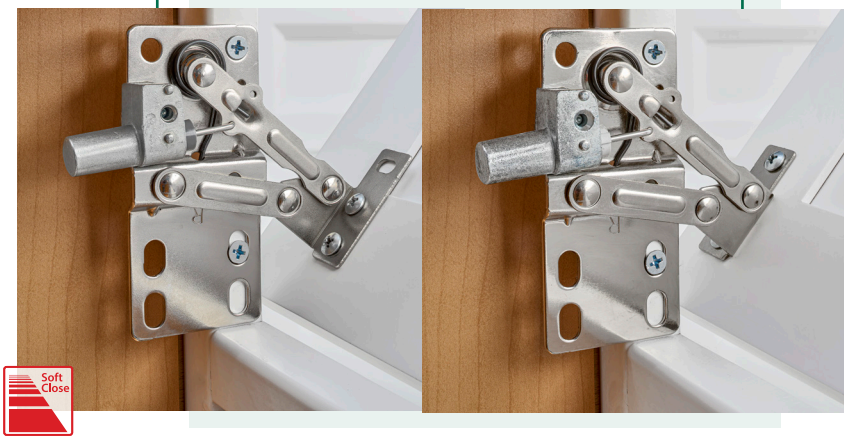

LD-0220-50SC-40 LD-0220-50SCFO-40

(40 pr.) Pivot Hinge w/ Soft-Close

PRODUCT	DESCRIPTION	DIMS	FINISH	SLP
LD-0220-50SC-40	Tip-Out Hinge	1" (26 mm) W x 2-5/8" (67 mm) D x 3-7/8" (99 mm) H	Silver	$29.00 pr.
LD-0220-50SCFO-40	Tip-Out Hinge for Full Overlay	1-1/4" (32 mm) W x 2-5/8" (67 mm) D x 3-7/8" (99 mm) H	Silver	$32.65 pr.

LD-0220 Series

Pivot Hinge

- 45-degree opening
- Face frame or full access compatible
- Spring design closes firmly and stays closed
- Stiffening ribs provide extra stability
- (US Patent No. 7,635,171)

LD-0220-45-40

(40 pr.) Pivot Hinge

PRODUCT	DESCRIPTION	DIMS	FINISH	SLP
LD-0220-45-40	45-degree Pivot Hinge	1" (26 mm) W x 1-3/4" (45 mm) D x 3-7/8" (99 mm) H	Silver	$7.95 pr.

Self-Holdin® Tip-Out Hinges

6552 Series

6552-94-0220-4 6552-95-0220-4

- Available in (2) different sizes
- Self-closing spring to keep false fronts securely closed
- (US Patent No. 7,635,202)

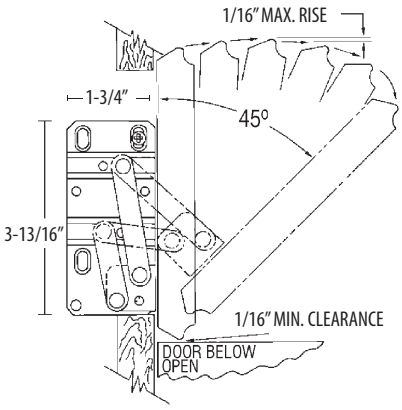

(40 pr.) Tip-Out (Self-Holdin®) Hinge

PRODUCT	DESCRIPTION	DIMS	FINISH	SLP
6552-94-0220-4	Hinges For Tip-Out Trays (under 16")	1" (26 mm) W x 1-3/4" (45 mm) D x 3-13/16" (97 mm) H	Silver	$6.80 pr.
6552-95-0220-4	Hinges For Tip-Out Trays (16" and longer)	1" (26 mm) W x 1-3/4" (45 mm) D x 3-13/16" (97 mm) H	Silver	$6.80 pr.

Euro Hinges

6552 Series

- Designed for long sink front false panels
- Adjustable opening of 45 to 90 degrees

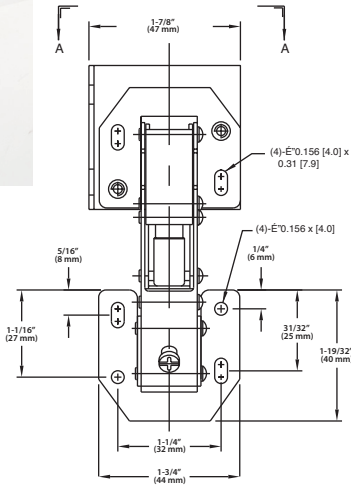

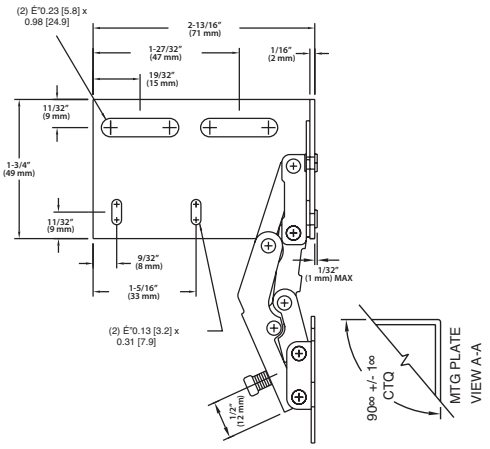

(10 pr.) Euro Hinges

PRODUCT	DESCRIPTION	DIMS	FINISH	SLP
6552-ETH-10	Euro Hinges	See Illustration Above	Silver	$16.25 pr.

548WB Series

Undersink Steel Wire Pullout Organizer

NEW!

- Designed for 30" sink base cabinets
- Powder chrome wire L-shaped frame
- Easy 4-screw installation
- Mounts to cabinet bottom
- Two-tier design maximizes storage space while working around plumbing

Two-Tier Undersink Steel Wire Pullout Organizer

PRODUCT	DESCRIPTION	DIMS	MCO	CAB	FINISH	SLP
548WB-0919CR-1	Sink Base Organizer	9-1/32" (230 mm) W x 18-5/8" (473 mm) D x 16-3/16" (412 mm) H	9" (229 mm)	SB30	Satin Chrome	$137.75

Sink Base Door Storage

4SBSU Series

4SBSU-15

- Designed for 30", 36" and 42" sink base cabinet doors
- Natural maple construction with semi-gloss finish
- Patented adjustable door-mount brackets that provide up to 5" adjustability (US Patent No. 7,204,569)
- TSCA Title VI compliant

Sink Base Door Storage

PRODUCT	DESCRIPTION	DIMS	MCO	CAB	FINISH	SLP
4SBSU-15	Door Storage	10-1/2" (267 mm) W x 5" (127 mm) D x 18-5/8" (474 mm) H	11-5/8" (295 mm) - FF 10-5/8" (270 mm) - FL	SB30	Maple	$97.15
4SBSU-18	Door Storage	13-1/2" (343 mm) W x 5" (127 mm) D x 18-5/8" (474 mm) H	14-3/8" (365 mm) - FF 13-5/8" (346 mm) - FL	SB36	Maple	$102.95
4SBSU-21	Door Storage	16-1/2" (420 mm) W x 5" (127 mm) D x 18-5/8" (474 mm) H	17-1/4" (438 mm) - FF 16-5/8" (422 mm) - FL	SB42	Maple	$115.85

Grocery Bag Holder

4SPBD Series

4SPBD-15

- Designed for 30" and 36" sink base cabinet doors
- Natural maple construction with semi-gloss finish
- Patented adjustable door-mount brackets that provide up to 5" adjustability (US Patent No. 7,204,569)
- TSCA Title VI compliant

Sink Base Grocery Bag Door Storage

PRODUCT	DESCRIPTION	DIMS	MCO	CAB	FINISH	SLP
4SPBD-15	Grocery Bag Holder	10-1/2" (267 mm) W x 5" (127 mm) D x 18-5/8" (474 mm) H	11-5/8" (295 mm) - FF 10-5/8" (270 mm) - FL	SB30	Maple	$113.10
4SPBD-18	Grocery Bag Holder	13-1/2" (343 mm) W x 5" (127 mm) D x 18-5/8" (474 mm) H	14-3/8" (365 mm) - FF 13-5/8" (346 mm) - FL	SB36	Maple	$123.25

5SOWC Series

Wire Door-Mount Waste Container

- Designed for 30" sink base cabinets
- Single 8 L polymer container, metallic silver
- Built-in hand towel rack
- Chrome-plated wire frame
- Extended mounting bar
- Mounts to cabinet door
- (1) white lid

Wire Door-Mount Waste Container

PRODUCT	DESCRIPTION	DIMS	MCO	CAB	FINISH	SLP
5SOWC-8-1	Single 8L	8-1/2" (216 mm) W x 18-3/4" (477 mm) D x 18-7/8" (480 mm) H	12" (305 mm)	VB30	Chrome	$53.65

4SOWC Series

Maple Door-Mount Waste Container

- Designed for 30" vanity base cabinets
- Single 8 L polymer container, metallic silver
- Maple dovetail frame with semi-gloss finish
- Mounts to cabinet door
- (4) Patented pre-assembled adjustable door-mount brackets (US Patent No. 7,204,569)
- (1) white lid
- TSCA Title VI compliant

Maple Door-Mount Vanity Waste Container

PRODUCT	DESCRIPTION	DIMS	MCO	CAB	FINISH	SLP
4SOWC-8-1	Single 8 L	10-3/8" (264 mm) W x 7-3/8" (188 mm) D x 12-5/16" (313 mm) H	12-3/4" (324 mm)	VB30	Silver	$92.80

Sink Base Waste Pullout

5SBWC Series

- Designed for 24" and larger sink base cabinets
- (1) 8 L and (1) 15 L bin, both with handles
- Full-extension, undermount slides w/ soft-close
- Mounts to cabinet floor
- (1) green lid and (1) white lid
- Door-mounting kit (sold separately)

Soft Close

Scan for video

Wire Undersink Waste Pullout

PRODUCT	DESCRIPTION	DIMS	MCO	CAB	FINISH	SLP
5SBWC-815S-1	(1) 8 L and (1) 15 L	8-15/16" (228 mm) W x 18-19/32" (473 mm) D x 14-1/4" (362 mm) H	9" (229 mm)	SB24	Silver	$173.30
Accessories						
5WB-DMKIT	Door-Mount Kit				Chrome	$39.15

Waste & Cleaning Pullout

5SBWCC Series

- Designed for 24" and larger sink base cabinets
- (1) 8 L with removable rack and (2) 1 L spray bottles
- Full-extension, undermount slides w/ soft-close
- Mounts to cabinet floor
- (1) green lid
- Door-mounting kit (sold separately)

Soft Close

Scan for video

Wire Undersink Waste & Cleaning Pullout

PRODUCT	DESCRIPTION	DIMS	MCO	CAB	FINISH	SLP
5SBWCC-8S-1	(1) 8 L and (2) 1 L Bottles	8-15/16" (228 mm) W x 18-19/32" (473 mm) D x 14-1/4" (362 mm) H	9" (229 mm)	SB24	Silver	$152.25
Accessories						
5WB-DMKIT	Door-Mount Kit				Chrome	$39.15

5386 Series

U-Shaped Solid Bottom Shelves

(2) units shown *5386-33BCSCFL-FOG*

- Designed for 33" and 36" sink base cabinets
- U-shaped solid bottom shelves, natural maple, gray or orion gray
- Full-extension, undermount slides w/ BLUM soft-close
- Mounts to cabinet floor or side walls
- Pre-assembled door-mount brackets
- Side and bottom mount brackets
- Fits around plumbing
- TSCA Title VI compliant

Designed in cooperation with EIGE

Scan for video

PRODUCT #	SURFACE AREA
30" U-Shaped Shelf	331 sq. in.
33" U-Shaped Shelf	353 sq. in.

Full-extension slides with soft-close

Can be side mounted

PART	Basket Width "W"
5386-30BCSC-**	28-15/16" (735 mm)
5386-33BCSC-**	31-15/16" (811 mm)
5386-30BCSCFL-FOG	28-15/16" (735 mm)
5386-33BCSCFL-FOG	31-15/16" (811 mm)

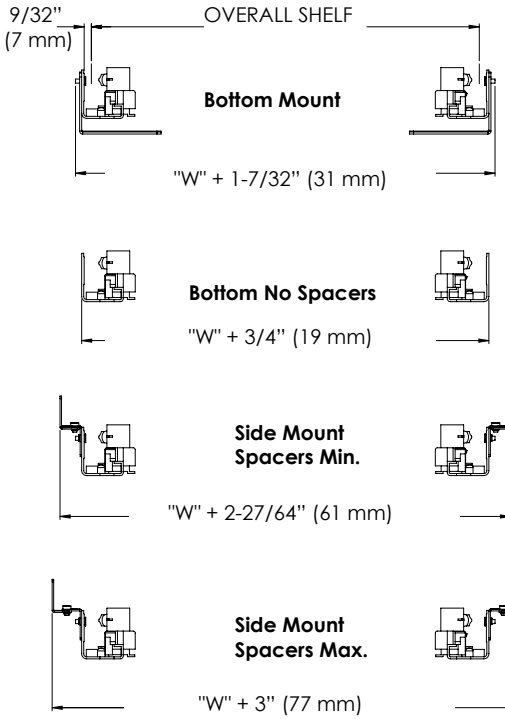

5386-30BCSC-MP
U-Shaped Solid Bottom Shelf
(Natural Maple finish shown)

5386-30BCSC-GR
U-Shaped Solid Bottom Shelf
(Gray finish shown)

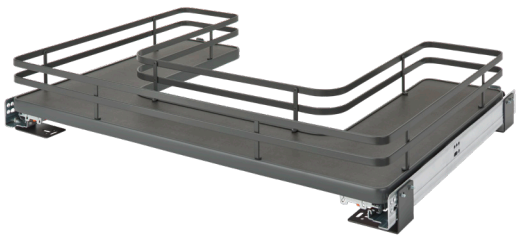

5386-30BCSCFL-FOG
U-Shaped Solid Bottom Shelf
(Orion Gray finish shown)

NOTE: ** Insert "MP" for Maple Shelf or "GR" for Gray Shelf

U-Shaped Solid Bottom Shelf w/ BLUM Soft-Close

PRODUCT	DESCRIPTION	DIMS	MCO	CAB	FINISH	SLP
5386-30BCSC-**	Solid Bottom Shelf	29-11/16" (754 mm) - 32" (813 mm) W x 21-17/32" (547 mm) D x 5-1/16" (129 mm) H	29-11/16" (754 mm)	SB33	Chrome	$565.50
5386-33BCSC-**	Solid Bottom Shelf	32-11/16" (830 mm) - 35" (889 mm) W x 21-17/32" (547 mm) D x 5-1/16" (129 mm) H	32-11/16" (830 mm)	SB36	Chrome	$594.50
Full Access U-Shaped Solid Bottom Shelf w/ BLUM Soft-Close						
5386-30BCSCFL-FOG	Solid Bottom Shelf	29-11/16 - 32" (754 - 813 mm) W x 21-17/32" (551 mm) D x 5-1/16" (146 mm) H	29-11/16" (754 mm)	FLSB33	Orion Gray	$580.00
5386-33BCSCFL-FOG	Solid Bottom Shelf	32-11/16 - 35" (830 - 889 mm) W x 21-17/32" (551 mm) D x 5-1/16" (146 mm) H	32-11/16" (830 mm)	FLSB36	Orion Gray	$609.00

5786 Series

U-Shaped Wire Bottom Shelves

(2) units shown

5786-33CR

- Designed for 33" and 36" sink base cabinets
- U-shaped chrome wire bottom shelves
- Full-extension, ball-bearing slides w/ soft-close
- Mounts to cabinet floor or side walls
- Pre-assembled door-mount brackets
- Side and bottom mount brackets
- Fits around plumbing

PRODUCT #	SURFACE AREA
30" U-Shaped Shelf	360 sq. in.
33" U-Shaped Shelf	382 sq. in.

MOUNTING BRACKET OPTIONS

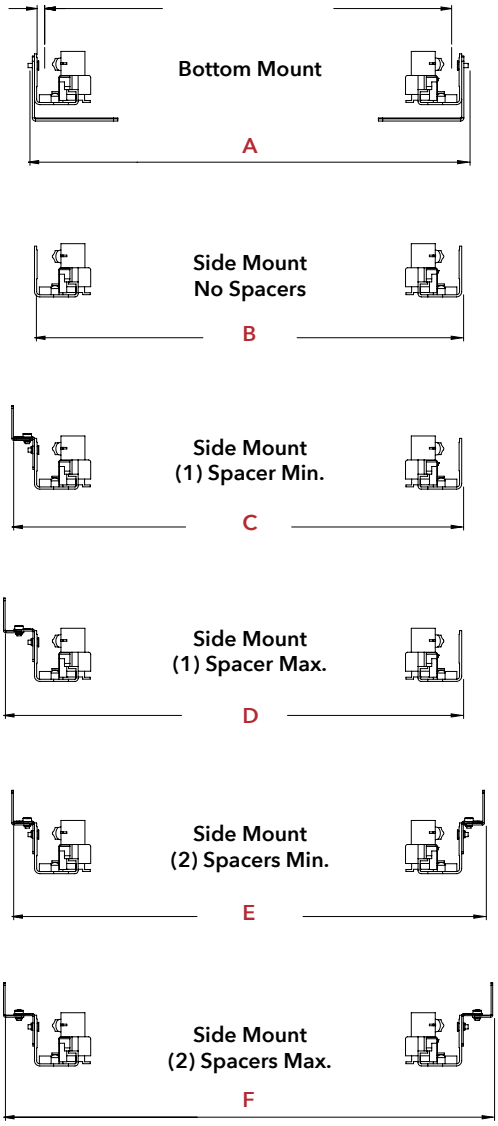

Door mountable with included door-mount brackets

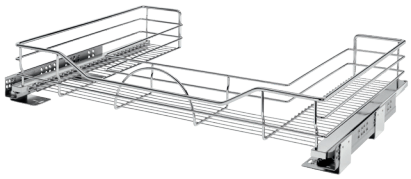

5786-33CR
U-Shaped Wire Bottom Shelf

PART	A	B	C	D	E	F
5786-30CR	11-15/16" (303 mm)	11-1/2" (292 mm)	12-5/16" (313 mm)	12-11/16" (322 mm)	13-1/8" (333 mm)	13-7/8" (352 mm)
5786-33CR	14-15/16" (379 mm)	14-1/2" (368 mm)	15-5/16" (389 mm)	15-11/16" (399 mm)	16-1/8" (410 mm)	16-7/8" (429 mm)

U-Shaped Wire Bottom Shelf w/ Ball-Bearing Soft-Close

PRODUCT	DESCRIPTION	DIMS	MCO	CAB	FINISH	SLP
5786-30CR	Wire Bottom Shelf	29-3/8 - 31-3/4" (749 - 806 mm) W x 21-3/4" (556 mm) D x 5-5/16" (140 mm) H	29-3/8" (746 mm) - FF 29-3/8" (746 mm) - FL	SB33	Chrome	$391.50
5786-33CR	Wire Bottom Shelf	32-3/8 - 34-3/4" (826 - 883 mm) W x 21-3/4" (556 mm) D x 5-5/16" (140 mm) H	32-3/8" (822 mm) - FF 32-3/8" (822 mm) - FL	SB36	Chrome	$420.50

441 Series

Maple L-Shaped Vanity Organizer

- Designed for 24″ and 30″ vanity sink base cabinets
- L-shaped natural maple dovetail frame with semi-gloss finish
- (4) shelves with non-skid vinyl lining on lower level
- Full-extension, undermount slides w/ BLUM soft-close
- (6) polycarbonate bins for upper level
- Mounts to cabinet floor
- Patented design (US Patent No. D854,359)
- Patented mounting straps (US Patent No. 9,756,941)
- TSCA Title VI compliant

441-15VSBSC-1

441-12VSBSC-1
Vanity Organizer

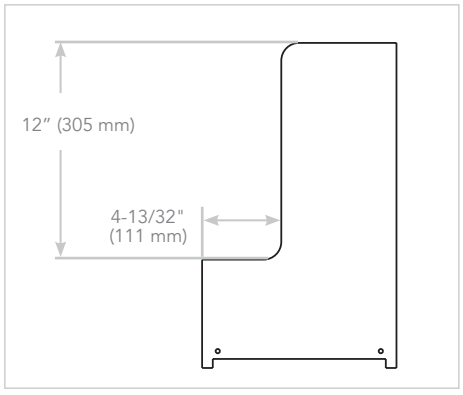

PIPE CLEARANCE DIMENSIONS
(For both units)

Scan for video

L-Shaped Vanity Organizers w/ BLUM Soft-Close

PRODUCT	DESCRIPTION	DIMS	MCO	CAB	FINISH	SLP
441-12VSBSC-1	Vanity Organizer	8-1/2″ (216 mm) W x 18-25/32″ (477 mm) D x 18-27/32″ (479 mm) H	9″ (229 mm)	VSB24	Maple	$395.85
441-15VSBSC-1	Vanity Organizer	11-21/32″ (291 mm) W x 18-25/32″ (477 mm) D x 18-27/32″ (479 mm) H	12″ (305 mm)	VSB30	Maple	$479.95

Maple U-Shaped Vanity Pullout

486 Series

486-30VSBSC-BM-1 *(2) units shown*

- Designed for 30" vanity sink base cabinets, but works great in standard depth cabinets as well
- Natural maple construction with semi-gloss finish
- Full-extension, undermount slides w/ BLUM soft-close
- Mounts to cabinet floor or side walls
- Side and bottom mount brackets
- (4) adjustable dividers, (1) 8 L waste container w/ white lid (BM), (2) removable polycarbonate bins (SM)
- Non-skid vinyl lining
- TSCA Title VI compliant

486-30VSBSC-BM-1
Maple U-Shaped Pullout
w/ (4) Adjustable Dividers and
(1) 8 L. Container
(Bottom mount unit shown)

486-30VSBSC-SM-1
Maple U-Shaped Pullout
w/ (4) Adjustable Dividers and
(2) Acrylic Bins
(Side mount unit shown)

Scan for video

PRODUCT #	SURFACE AREA
Maple U-Shaped Shelf	265 sq. in.

U-Shaped Vanity Pullout w/ BLUM Soft-Close

PRODUCT	DESCRIPTION	DIMS	MCO	CAB	FINISH	SLP
486-30VSBSC-BM-1	Bottom Mount Pullout	25-5/8" (652 mm) W x 18-11/16" (475 mm) D x 14-1/4" (362 mm) H	25" (635 mm) - FF 25-3/4" (654 mm) - FL	VSB30	Maple	$407.45
486-30VSBSC-SM-1	Side Mount Pullout	27-17/32 - 28-3/4" (700 - 730 mm) W x 19 - 20-3/4" (483 - 527 mm) D x 6-1/2" (165 mm) H	25" (635 mm) - FF 25" (635 mm) - FL	VSB30	Maple	$384.25

544 Series

Undersink Cleaning Caddy

NEW DESIGN!

- Designed for 30″ and larger sink base cabinets
- Reversible design fits around various plumbing fixtures
- Fully removable for easy carrying
- (2) easy-to-clean polymer shelves with a chrome-plated wire frame
- Mounts to cabinet floor
- Universal mounting, non-handed hardware
- Robust feet allow for easy transportation and bottom bumpers protect countertop surfaces

Removable caddy for easy transport

Undersink Cleaning Caddy

PRODUCT	DESCRIPTION	DIMS	MCO	FINISH	SLP
544-12KD-1	Cleaning Caddy	11-7/8″ (302 mm) W x 15-29/32″ (404 mm) D x 18-15/32″ (470 mm) H	12″ (305 mm)	Chrome	$158.20

BASE

Most of our organizational solutions are designed for base cabinet applications, so you always have a versatile list of innovative products to choose from. From face frame to full access, rest assured we have the perfect product sized for your type of cabinet. These popular base cabinet accessories are designed with the same superior quality you have come to expect from Rev-A-Shelf®.

PROP 65 WARNING FOR CALIFORNIA RESIDENTS

WARNING: These products can expose you to chemicals such as formaldehyde, lead or styrene, which are known to the State of California to cause cancer and birth defects or other reproductive harm. For more information go to www.P65Warnings.ca.gov

REV-A-SHELF®

Innovation through *Organization*™

GLD Series

Glideware™ Pullout

GLD-W22-BC-7

- Designed for 14" to 22" cabinet depths
- Solid wood construction, natural maple or gray w/ up to (7) nickel chome hooks
- Mounts to cabinet top and rear
- (2) slide configurations:
  - Full-extension, ball-bearing slides
  - Full-extension, undermount slides w/BLUM soft-close
- US Patent No. 9,433,283 and 9,022,237
- TSCA Title VI compliant

Scan for video

NOTE: Dimensions are without the optional rear mounting bracket. Rear mounting bracket is 6-1/4" (159 mm) wide and adds 3/4" (19 mm) to the depth, and 13/16" (20 mm) to the height.

MCO dimensions and CAB recommendations are dependent on what accessories you intend on hanging on the product. Typical cookware will fit in B18.

GLD-W14-SC-5
Glideware™ Pullout
w/ Ball-Bearing Slide
and (5) Hooks
(14" version shown)

Pantry application

GLD-HK-L-NC-7
Glideware™ Long Hook
Nickel Chrome

Use our B2B hooks for added
storage anywhere you need

GLD-HK-S-NC-7
Glideware™ Short Hook
Nickel Chrome

GLD-HK-2-NC-5
Glideware™ Back-to-Back Hook
Nickel Chrome

PRODUCT	DESCRIPTION	DIMS	CAB	FINISH	SLP
Glideware™ Pullout w/ (5 or 7) Short Hooks					
GLD-W14-SC-5	14" Glideware™	4" (102 mm) W x 14" (356 mm) D x 4-1/8" (105 mm) H	FHB18	Maple	$142.10
GLD-W22-SC-7	22" Glideware™	4" (102 mm) W x 22" (559 mm) D x 4-1/8" (105 mm) H	FHB18	Maple	$172.55
Glideware™ Pullout w/ BLUM Soft-Close and (5 or 7) Long Hooks					
GLD-W14-BC-5	14" Glideware™	No Match!	FHB18	Maple	No Match!
GLD-W16-BC-5	16" Glideware™	6" (153 mm) W x 16" (407 mm) D x 5-1/16" (129 mm) H	FHB18	Maple	$174.00
GLD-W22-BC-7	22" Glideware™	6" (153 mm) W x 22" (559 mm) D x 5-1/16" (129 mm) H	FHB18	Maple	$355.25
Glideware™ Accessories					
GLD-HK-S-NC-7	(7) Glideware™ Short Hooks	1" (26 mm) W x 1-1/2" (39 mm) D x 3-1/8" (80 mm) H		Nickel	$14.35
GLD-HK-L-NC-7	(7) Glideware™ Long Hooks	1" (26 mm) W x 1-1/2" (39 mm) D x 4" (102 mm) H		Nickel	$17.85
GLD-HK-2-NC-5	(5) Glideware™ Back-to-Back Hooks	1" (26 mm) W x 2-21/32" (68 mm) D x 3-1/8" (80 mm) H		Nickel	$19.70

596 Series

U-Shaped Tray Organizer

- Available in 10" height
- Chrome-plated round wire
- Mounts to cabinet floor
- Easy 4-screw installation
- Use multiple to create custom storage space

Chrome Wire U-Shaped Tray Organizer

PRODUCT	DESCRIPTION	DIMS	MCO	FINISH	SLP
596-10CR-52	U-Shaped Tray Divider	3" (77 mm) W x 11-7/8" (302 mm) D x 10" (254 mm) H	3-1/4" (83 mm)	Chrome	$21.75

597 Series

Tray Divider w/ Clips

- Available in 12" height
- Chrome-plated or powder-coated white round wire
- Mounts to cabinet floor and rear wall
- Includes (4) screw-in clips and fasteners each
- Use multiple to create custom storage space

PRODUCT	DESCRIPTION	DIMS	FINISH	SLP
White Wire Tray Divider				
597-12-52	Tray Divider with Clips	3/4" (20 mm) W x 19-21/32" (500 mm) D x 12" (305 mm) H	White Wire	$13.80
(10) White Wire Tray Dividers				
597-12-10	(10) Tray Dividers with Clips	Empty Field!	White Wire	$9.85 ea.
Chrome Wire Tray Divider				
597-12CR-52	Tray Divider with Clips	3/4" (20 mm) W x 19-21/32" (500 mm) D x 12" (305 mm) H	Chrome Wire	$15.25
(10) Chrome Wire Tray Dividers				
597-12CR-10	(10) Tray Dividers with Clips	Empty Field!	Chrome Wire	$12.30 ea.

Chrome Tray Divider

LD-597 Series

LD-597-18CR-1

- Available in 12″ and 18″ height
- Chrome-plated round wire
- Mounts to cabinet floor and rear wall
- Use multiple to create custom storage space

Chrome Wire Tray Divider

PRODUCT	DESCRIPTION	DIMS	FINISH	SLP
LD-597-12CR-1	12" Chrome Tray Divider	1/4″ (6 mm) W x 20" (508 mm) D x 12" (305 mm) H	Chrome	$16.70
LD-597-18CR-1	18" Chrome Tray Divider	1/4″ (6 mm) W x 20" (508 mm) D x 18" (458 mm) H	Chrome	$18.85
(10) Chrome Wire Tray Dividers				
LD-597-12CR-10	(10) 12" Chrome Tray Dividers	1/4″ (6 mm) W x 20" (508 mm) D x 12" (305 mm) H	Chrome	$15.25 ea.
LD-597-18CR-10	(10) 18" Chrome Tray Dividers	1/4″ (6 mm) W x 20" (508 mm) D x 18" (458 mm) H	Chrome	$17.40 ea.

Two-Tier Base Organizer

548 Series

548-06CR-1

- Designed for 9″ base cabinets
- Ball-bearing slides
- Universal brackets for right or left hand mounting
- Door-mountable chrome frame

Chrome Two-Tier Base Organizer Pullout

PRODUCT	DESCRIPTION	DIMS	MCO	CAB	FINISH	SLP
548-06CR-1	Base Organizer	5-1/2″ (140 mm) W x 20″ (508 mm) D x 19-1/2″ (496 mm) H	6-3/4″ (171 mm)	B9	Chrome	$137.75

5WB* Series

Chrome Wire Pullout Shelves

5WB2-1822CR-1

5WB1

- Designed for 12″, 15″, 18″, 21″, 24″ and 27″ base cabinets
- Chrome-plated round wire frame ideal for organizing bulky items
- Full-extension, ball-bearing slides available in 18″, 20″ and 22″ depths
- Easy 4-screw installation
- Door-mount brackets available (sold separately)

5WB2

- Designed for 12″, 15″, 18″, 21″, 24″ and 27″ base cabinets
- Chrome-plated round wire
- Full-extension ball-bearing slides
- 7-screw installation
- (3) adjustable heights
- Mounts to cabinet floor, side and rear wall
- Telescoping rear mounting bracket
- U-shaped support bracket
- Door-mount brackets available (sold separately)

Door-mount kit, sold separately

Adjustable rear mounting bracket

Top-down view of U-shaped support brackets

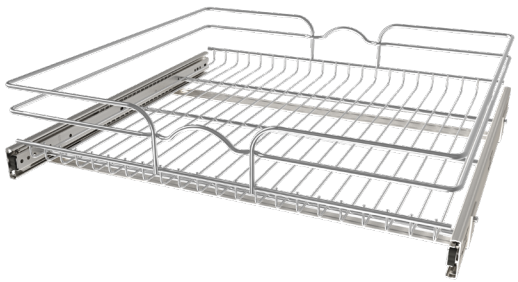

5WB1-2422CR-1
Single Chrome Wire Pullout
(Shelf for base 24" shown)

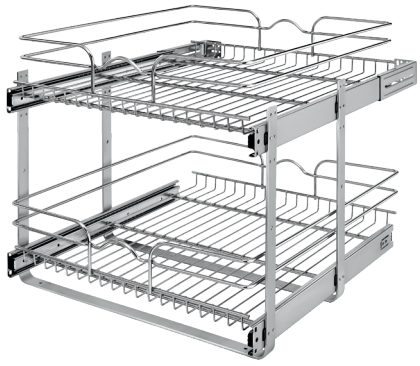

5WB2-2122CR-1
Two-Tier Chrome Wire Pullout
(Shelves for base 21" shown)

Chrome Wire Pullout Shelf

PRODUCT	DESCRIPTION	DIMS	MCOFF	CAB	FINISH	SLP
5WB1-1220CR-1	Pullout Shelf	11-1/2" (293 mm) W x 19-3/4" (502 mm) D x 5-9/16" (142 mm) H	11-1/2" (292 mm)	B15	Chrome	$106.70
5WB1-1520CR-1	Pullout Shelf	14-1/2" (369 mm) W x 19-3/4" (502 mm) D x 5-9/16" (142 mm) H	14-1/2" (368 mm)	B18	Chrome	$116.70
5WB1-1820CR-1	Pullout Shelf	17-1/2" (445 mm) W x 19-3/4" (502 mm) D x 5-9/16" (142 mm) H	17-1/2" (445 mm)	B21	Chrome	$130.05
5WB1-2120CR-1	Pullout Shelf	20-1/2" (521 mm) W x 19-3/4" (502 mm) D x 5-9/16" (142 mm) H	20-1/2" (521 mm)	B24	Chrome	$141.10
5WB1-1222CR-1	Pullout Shelf	11-1/2" (293 mm) W x 22" (559 mm) D x 5-9/16" (142 mm) H	11-1/2" (292 mm)	B15	Chrome	$113.70
5WB1-1522CR-1	Pullout Shelf	14-1/2" (369 mm) W x 22" (559 mm) D x 5-9/16" (142 mm) H	14-1/2" (368 mm)	B18	Chrome	$125.00
5WB1-1822CR-1	Pullout Shelf	17-1/2" (445 mm) W x 22" (559 mm) D x 5-9/16" (142 mm) H	17-1/2" (445 mm)	B21	Chrome	$137.05
5WB1-2122CR-1	Pullout Shelf	20-1/2" (521 mm) W x 22" (559 mm) D x 5-9/16" (142 mm) H	20-1/2" (521 mm)	B24	Chrome	$147.15
5WB1-2422CR-1	Pullout Shelf	23-1/2" (597 mm) W x 22" (559 mm) D x 5-9/16" (142 mm) H	23-1/2" (597 mm)	B27	Chrome	$160.10
Two-Tier Chrome Wire Pullout Shelves						
5WB2-0922CR-1	Pullout Shelves	8-3/4" (223 mm) W x 22-1/4" (566 mm) D x 16-1/4 - 19" (413 - 483 mm) H	8-1/2" (216 mm)	B12	Chrome	$204.75
5WB2-1222CR-1	Pullout Shelves	11-3/4" (299 mm) W x 22-1/4" (566 mm) D x 16-1/4 - 19" (413 - 483 mm) H	11-1/2" (292 mm)	B15	Chrome	$224.90
5WB2-1522CR-1	Pullout Shelves	14-3/4" (375 mm) W x 22-1/4" (566 mm) D x 16-1/4 - 19" (413 - 483 mm) H	14-1/2" (368 mm)	B18	Chrome	$238.25
5WB2-1822CR-1	Pullout Shelves	17-3/4" (451 mm) W x 22-1/4" (566 mm) D x 16-1/4 - 19" (413 - 483 mm) H	17-1/2" (445 mm)	B21	Chrome	$261.45
5WB2-2122CR-1	Pullout Shelves	20-3/4" (528 mm) W x 22-1/4" (566 mm) D x 16-1/4 - 19" (413 - 483 mm) H	20-1/2" (521 mm)	B24	Chrome	$279.55
5WB2-2422CR-1	Pullout Shelves	23-3/4" (604 mm) W x 22-1/4 (566 mm) D x 16-1/4 - 19" (413 - 483 mm) H	23-1/2" (597 mm)	B27	Chrome	$306.70
Accessories						
5WB-DMKIT	Door-Mount Kit for Wire Pullout				Chrome	$39.15

5CW2 Series

Two-Tier Cookware Organizer

- Designed for 15" and 24" base cabinets
- Chrome-plated wire frame
- (2) slide configurations:
  - Full-extension ball-bearing slides
  - Full-extension, ball-bearing slides w/ soft-close
- Independently operating shelves that accommodate a variety of cookware sizes and brands
- Top tier organizes lids
- Bottom tier with adjustable dividers stores a variety of larger pots and pans
- Mounts to cabinet floor, side and rear wall
- US Patent No. D588,415
- U-shaped bracket for added support
- Door-mount brackets available (sold separately)

5CW2-2122-CR

Scan for video

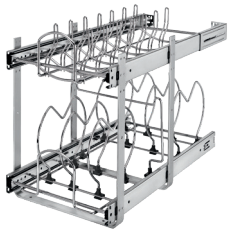

5CW2-1222-CR
Cookware Organizer
Holds (7) Lids

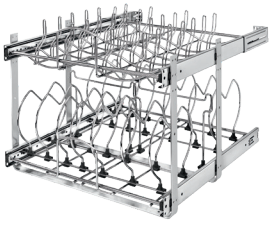

5CW2-2122-CR
Cookware Organizer
Holds (14) Lids

Door-mount kit, sold separately

Two-Tier Cookware Organizer Pullout

PRODUCT	DESCRIPTION	DIMS	MCO	CAB	FINISH	SLP
5CW2-1222-CR	Cookware Organizer	11-3/4" (299 mm) W x 22" (559 mm) D x 18" (458 mm) H	11-1/2" (292 mm)	B15	Chrome	$210.25
5CW2-2122-CR	Cookware Organizer	20-3/4" (528 mm) W x 22" (559 mm) D x 18-1/8" (461 mm) H	20-1/2" (521 mm)	B24	Chrome	$346.55
Two-Tier Cookware Organizer w/ Ball-Bearing Soft-Close						
5CW2-1222SC-CR	Cookware Organizer	11-3/4" (299 mm) W x 22" (559 mm) D x 18" (458 mm) H	11-1/2" (292 mm)	B15	Chrome	$268.25
5CW2-2122SC-CR	Cookware Organizer	20-3/4" (528 mm) W x 22" (559 mm) D x 18-1/8" (461 mm) H	20-1/2" (521 mm)	B24	Chrome	$427.75
Accessories						
5WB-DMKIT	Door-mount Kit				Chrome	$39.15

Two-Tier Cookware Organizer

4CW2 Series

- Designed for 18″ and 24″ base cabinets
- Natural maple dovetail construction with semi-gloss finish
- Full-extension with 3/4″ over-travel, undermount slides w/ BLUM soft-close
- Up to (220) pre-drilled peg holes
- (4) matching, press-in pegs
- Top shelf holds (1) lid organizer for 18″ and (2) lid organizers for 24″
- Mounts to cabinet floor
- TSCA Title VI compliant

4CW2-24SC-1

4CW2-18SC-1
Maple Cookware Organizer

Customizable

Scan for video

Wood Two-Tier Base Organizer Pullout w/ BLUM Soft-Close

PRODUCT	DESCRIPTION	DIMS	MCO	CAB	FINISH	SLP
4CW2-18SC-1	Cookware Organizer	14-1/2″ (369 mm) W x 22-1/4″ (566 mm) D x 18-7/32″ (464 mm) H	14-1/2″ (368 mm)	B18	Maple	$652.50
4CW2-24SC-1	Cookware Organizer	20-1/2″ (521 mm) W x 22-1/4″ (566 mm) D x 18-7/32″ (464 mm) H	20-1/2″ (521 mm)	B24	Maple	$768.50

4CDS Series

Casserole Dish Organizer

- Designed for 18″ and 24″ base cabinets
- Natural maple dovetail construction with semi-gloss finish
- Full-extension with 3/4″ over-travel, undermount slides w/ BLUM soft-close
- Customize drawer compartment with included removable dividers
- Up to (6) dividers and (12) clips
- Mounts to cabinet floor
- TSCA Title VI compliant

4CDS-24SC-1

4CDS-18SC-1
Casserole Dish Organizer
(18″ version shown)

Casserole Dish Organizer w/ BLUM Soft-Close

PRODUCT	DESCRIPTION	DIMS	MCO	CAB	FINISH	SLP
4CDS-18SC-1	Casserole Dish Organizer	14-1/2″ (369 mm) W x 22-3/32″ (562 mm) D x 10-1/2″ (267 mm) H	14-1/2″ (368 mm)	B18	Maple	$465.45
4CDS-24SC-1	Casserole Dish Organizer	20-1/2″ (521 mm) W x 22-3/32″ (562 mm) D x 10-1/2″ (267 mm) H	20-1/2″ (521 mm)	B24	Maple	$551.00

Base Door Storage

4SBSU Series

4SBSU-15

- Designed for 15", 18" and 21" base cabinet doors
- Natural maple construction with semi-gloss finish
- Patented adjustable door-mount brackets that provide up to 5" adjustability (US Patent No. 7,204,569)
- Easy 4-screw installation
- TSCA Title VI compliant

Includes removable top tray

Door-Mount Base Door Storage

PRODUCT	DESCRIPTION	DIMS	MCO	CAB	FINISH	SLP
4SBSU-15	Door Storage	10-1/2" (267 mm) W x 5" (127 mm) D x 18-5/8" (474 mm) H	12" (305 mm)	B15	Maple	$97.15
4SBSU-18	Door Storage	13-1/2" (343 mm) W x 5" (127 mm) D x 18-5/8" (474 mm) H	15" (381 mm)	B18	Maple	$102.95
4SBSU-21	Door Storage	16-1/2" (420 mm) W x 5" (127 mm) D x 18-5/8" (474 mm) H	18" (457 mm)	B21	Maple	$115.85

Grocery Bag Holder

4SPBD Series

4SPBD-15

- Designed for 15" and 18" base cabinet doors
- Natural maple construction with semi-gloss finish
- Patented adjustable door-mount brackets that provide up to 5" adjustability (US Patent No. 7,204,569)
- TSCA Title VI Compliant

Includes removable top tray

Door-Mount Grocery Bag Holder

PRODUCT	DESCRIPTION	DIMS	MCO	CAB	FINISH	SLP
4SPBD-15	Door Storage	10-1/2" (267 mm) W x 5" (127 mm) D x 18-5/8" (474 mm) H	12" (305 mm)	B15	Maple	$113.10
4SPBD-18	Door Storage	13-1/2" (343 mm) W x 5" (127 mm) D x 18-5/8" (474 mm) H	15" (381 mm)	B18	Maple	$123.25

4DMCB Series

Door-Mount Cutting Board

- Designed for 15″ and 18″ base cabinets
- Natural maple support rack with chrome-plated round wire
- Available with a mineral oil treated, maple hardwood cutting board or a Polyethylene cutting board
- Patented adjustable door-mount brackets that provide up to 5″ adjustability (US Patent No. 7,204,569)
- TSCA Title VI compliant

4DMCB-18

4DMCB-15
Wood Cutting Board
(15″ Version shown)

4DMCB-18P
Polyethylene Cutting Board
(18″ Version shown)

Adjustable Mounting Brackets
(US Patent No. 7,204,569)

Natural Maple Door-Mount Cutting Board

PRODUCT	DESCRIPTION	DIMS	MCO	CAB	FINISH	SLP
4DMCB-15	Cutting Board	10-1/2″ (267 mm) W x 2-7/8″ (74 mm) D x 16-7/8″ (429 mm) H	10-7/8″ (305 mm) - FF 10-7/8″ (305 mm) - FL	B15	Maple	$123.25
4DMCB-18	Cutting Board	13-1/2″ (343 mm) W x 2-7/8″ (74 mm) D x 16-7/8″ (429 mm) H	13-7/8″ (352 mm) - FF 13-7/8″ (352 mm) - FL	B18	Maple	$137.75
Polyethylene Door-Mount Cutting Board						
4DMCB-15P	Cutting Board	11-5/16″ (288 mm) W x 2″ (51 mm) D x 16-7/16″ (418 mm) H	12″ (305 mm) - FF 12″ (305 mm) - FL	B15	Polyethylene/Maple	$117.45
4DMCB-18P	Cutting Board	14-3/4″ (375 mm) W x 2″ (51 mm) D x 16-7/16″ (418 mm) H	15-1/4″ (387 mm) - FF 15-1/4″ (387 mm) - FL	B18	Polyethylene/ Maple	$131.95

Door Storage Tray

4200 Series

4231-11-52

- 8", 11", 14" and 20" width trays
- Natural maple construction with chrome-plated round wire
- (1) or (5) tray sets
- Easy-to-install screw-in clips
- TSCA Title VI compliant

Bracket Extension Kit
(Sold separately)

4231-08-52
Door Storage Tray
(8" Version shown)

NOTE: Additional tray clips may be ordered

PRODUCT	DESCRIPTION	DIMS	MCO	CAB	FINISH	SLP
Wood Door-Mount Storage Tray w/ Screw-In Clips						
4231-08-52	8" Storage Tray	7-3/4" (197 mm) W x 4-1/4" (108 mm) D x 3-5/8" (93 mm) H	9" (229 mm)	B12	Maple	$49.30
4231-11-52	11" Storage Tray	10-3/4" (274 mm) W x 4-1/4" (108 mm) D x 3-5/8" (93 mm) H	12" (305 mm)	B15	Maple	$55.10
4231-14-52	14" Storage Tray	13-3/4" (350 mm) W x 4-1/4" (108 mm) D x 3-5/8" (93 mm) H	15" (381 mm)	B18	Maple	$59.45
4231-20-52	20" Storage Tray	19-3/4" (502 mm) W x 4-1/4" (108 mm) D x 3-5/8" (93 mm) H	21" (533 mm)	B24	Maple	$65.25
(5) Wood Door-Mount Storage Trays w/ Screw-In Clips						
4235-11-5	11" Storage Trays	10-3/4" (274 mm) W x 4-1/4" (108 mm) D x 3-5/8" (93 mm) H	12" (305 mm)	B15	Maple	$52.20 ea.
4235-14-5	14" Storage Trays	13-3/4" (350 mm) W x 4-1/4" (108 mm) D x 3-5/8" (93 mm) H	15" (381 mm)	B18	Maple	$55.10 ea.
4235-20-5	20" Storage Trays	19-3/4" (502 mm) W x 4-1/4" (108 mm) D x 3-5/8" (93 mm) H	21" (533 mm)	B24	Maple	$59.45 ea.
Accessories						
6230-MB-11-1	Mounting Bracket Extension Kit				White	$10.90

4WB Series

Swing Out Pantry

- Designed for 36" full height base cabinets
- Kit includes (2) swing out units and (2) door storage units
- Natural maple construction with semi-gloss finish
- Adjustable interior door and pantry shelves
- Chrome-plated accents
- Industrial piano hinge
- Patented adjustable Door-mount brackets that provide up to 5" of adjustability (US Patent No. 7,204,569)
- Center divider not included
- TSCA Title VI compliant

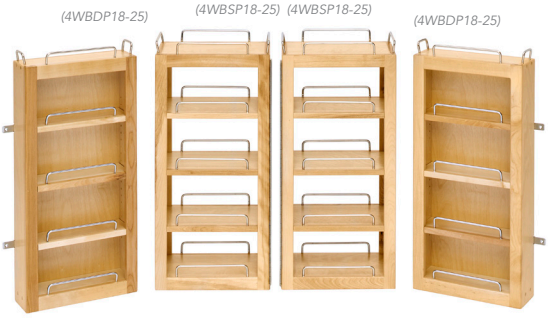

4WBP18-25-KIT
Swing Out Pantry Kit
(2) 4WBSP18-25 and (2) 4WBDP18-25

4WBP18-25-KIT

Chrome top rails can be installed to store items

NOTE: Minimum cabinet height: 4WBP18-25-KIT = 25-3/4" (654 mm) without top rails or 28-3/4" (730 mm) with top rails

Swing Out Pantry

PRODUCT	DESCRIPTION	DIMS	MCO	CAB	FINISH	SLP
4WBP18-25-KIT	25" Swing Out Pantry Kit - Includes (2) 4WBSP18-25 and (2) 4WBDP18-25		33" (838 mm)	FHB36	Maple	$610.45
4WBSP18-25	(1) 25" Swing Out Pantry Unit w/ Hardware	12" (305 mm) W x 7-1/2" (191 mm) D x 25" (635 mm) H	33" (838 mm)	FHB36	Maple	$160.95
4WBDP18-25	(1) 25" Pantry Door Unit w/ Hardware	12" (305 mm) W x 4" (102 mm) D x 25" (635 mm) H	15-1/4" (387 mm)	FHB36	Maple	$137.75

Vanity Storage Rack

4VR Series

4VR-15-1

- Designed for 12", 15", 18", 21" and 24" vanity base cabinets
- Natural maple frame with semi-gloss finish
- Mounts to cabinet door
- Patented adjustable door-mount brackets that provide up to 5" adjustability (US Patent No. 7,204,569)
- (2) non-skid vinyl shelves with acrylic accents
- TSCA Title VI compliant

Adjustable Mounting Brackets
(US Patent No. 7,204,569)

4VR-12-1
Storage Rack
(12" version shown)

4VR-21-1
Storage Rack
(21" version shown)

Door-Mount Vanity Storage Rack

PRODUCT	DESCRIPTION	DIMS	MCO	CAB	FINISH	SLP
4VR-12-1	Storage Rack for 12"	7-1/2" (191 mm) W x 3-1/8" (80 mm) D x 15-1/2" (394 mm) H	9" (229 mm)	VB12	Maple	$101.50
4VR-15-1	Storage Rack for 15"	10-1/2" (267 mm) W x 3-1/8" (80 mm) D x 15-1/2" (394 mm) H	12" (305 mm)	VB15	Maple	$107.30
4VR-18-1	Storage Rack for 18"	13-1/2" (343 mm) W x 3-1/8" (80 mm) D x 15-1/2" (394 mm) H	15" (381 mm)	VB18	Maple	$121.80

4DMKB Series

Door Mount Tip-Out Knife Block

NEW!

- Designed for 18" base cabinet doors
- Natural maple construction with semi-gloss finish
- Upper shelf for additional storage
- Knife block features Flex-Rod Technology that adjusts to hold up to 8 knives securely
- Access slot underneath the knife block to easily remove it for cleaning
- Suggested knife handle <6-3/4"
- 5 lb. weight limit
- Magnets to prevent the unit from tilting out when not in use
- Patented pre-assembled door-mount brackets (US Patent No. 7,204,569)
- Can be used with a Rev-A-Lock (RAL-101-1) (sold separately)
- Holds up to 8 knives (not included)
- TSCA Title VI compliant

Door Mount Tip-Out Knife Block

PRODUCT	DESCRIPTION	DIMS	MCO	CAB	FINISH	SLP
4DMKB-18-1	Tip-Out Knife Block	13-1/2" (343 mm) W x 5" (127 mm) D x 18-1/2" (470 mm) H	27" (686 mm)	B18	Maple	$245.80

Maple Universal Holder

NEW!

- Designed for 12" base cabinets or 30" sink base cabinets
- Natural maple construction with semi-gloss finish
- Easy 4-screw installation
- Ball-bearing slides
- Torsion spring with non-skid coating holds items up to 4-1/2" deep
- Adjustable height accommodates various items
- Universal, non-handed mounting
- Mounts to cabinet side
- Designed for use with step stools, cutting boards, cookbooks and more
- TSCA Title VI compliant

Maple Universal Holder

PRODUCT	DESCRIPTION	DIMS	MCO	CAB	FINISH	SLP
4UH-BC-9C	Unviversal Holder	21-21/32" (550 mm) W x 7-5/32" (183 mm) D x 20-1/2" (521 mm) H	9" (229 mm)	B12	Maple	$268.40

444 Series

Base Cabinet Modular Pullout Organizer

NEW!

blum

- Designed for 9" base cabinets
- Natural maple construction with a semi-gloss finish
- Chrome rails
- (8) included removable, washable polypropylene bins: (1) modular utensil bin, (1) modular knife bin, (6) modular spice bins
- BLUM soft-close slides
- Patented door-mount brackets provide 5" of adjustability and include micro-trim adjuster (US Patent No. 8,388,076)
- Unique rear stop for frameless applications
- TSCA Title VI compliant

(8) removable modular bins:
(1) utensil bin, (1) knife bin, (6) spice bins

Base Cabinet Modular Pullout Organizer w/ BLUM Soft-Close

PRODUCT	DESCRIPTION	DIMS	MCO	CAB	FINISH	SLP
444-BCSC-8C	Modular Pullout	8-5/8" (219 mm) W x 21-21/32" (550 mm) D x 19-3/8" (493 mm) H	9" (229 mm)	B12	Maple	$514.90

Food Storage Container Organizer

4FSCO Series

4FSCO-24SC-1

- Designed for 18" and 24" base cabinets
- Natural maple dovetail construction with semi-gloss finish
- Adjustable clip-on lid dividers (5 w/ 18") (8 w/ 24")
- (7) customizable metal dividers
- Full-extension with 3/4" over-travel,undermount slides w/ BLUM soft-close
- Mounts to cabinet floor
- US Patent No. D758,112
- TSCA Title VI compliant

Clip-on lid dividers

Versatile peg board with (7) metal dividers

4FSCO-18SC-1
Food Storage Container Organizer
(18" Version shown)

Scan for video

Food Storage Container Organizer w/ MOVENTO Soft-Close

PRODUCT	DESCRIPTION	DIMS	MCO	CAB	FINISH	SLP
4FSCO-18SC-1	Food Storage Container Organizer	14-1/2" (369 mm) W x 22-1/4" (566 mm) D x 18-7/8" (480 mm) H	14-1/2" (368 mm)	B18	Maple	$522.00
4FSCO-24SC-1	Food Storage Container Organizer	20-1/2" (521 mm) W x 22-1/4" (566 mm) D x 18-7/8" (480 mm) H	20-1/2" (521 mm)	B24	Maple	$580.00

4WDB Series

Drawer Pullout

NEW DESIGN!

blum

- Designed for 15", 18", 21" and 24" base cabinets
- Veneer plywood dovetail construction with a solid wood front
- BLUM 7/8-extension soft-close slides
- Patented slide straps to ease installation – 4 screw install (US Patent No. 9,756,941)
- Mounts to cabinet floor
- 75 lb. weight limit
- TSCA Title VI compliant

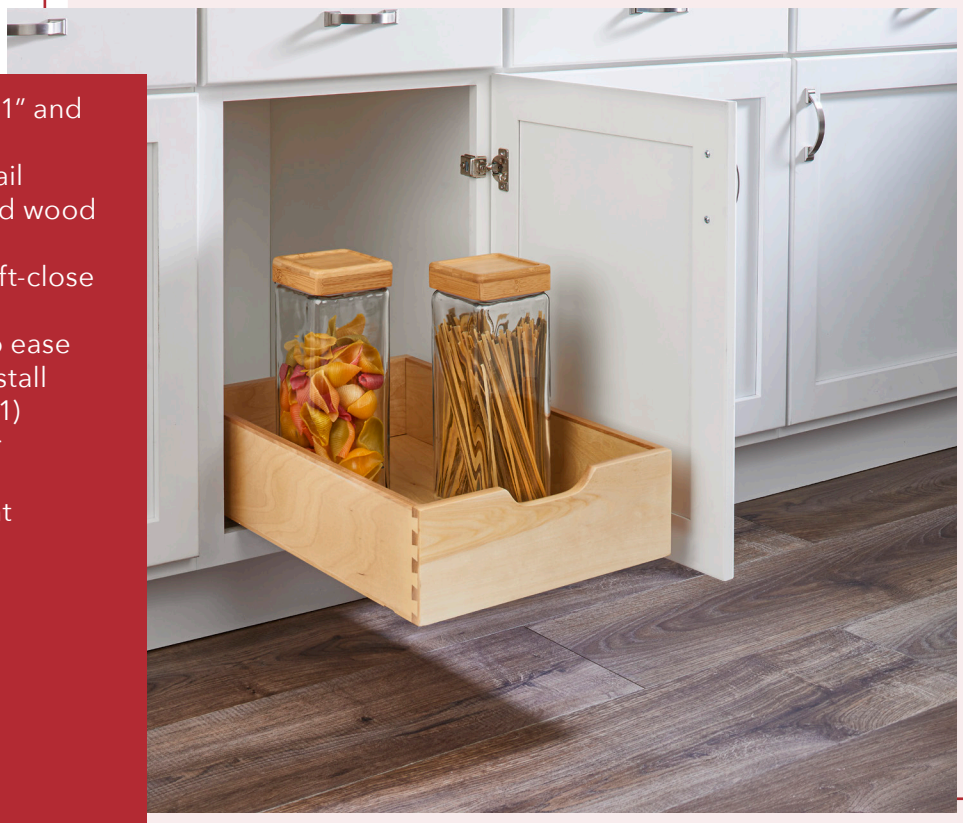

4WDB-1522SC-1

4WDB-15SC-1
Drawer Pullout
(12" Version shown)

Easy-release triggers for easy installation and drawer removal

Drawer Pullout w/ 3/4-Extension Soft-Close

PRODUCT	DESCRIPTION	DIMS	MCO	CAB	FINISH	SLP
4WDB-1219SC-1	Pullout Drawer - Reduced Depth	11-23/32" (298 mm) W x 19-7/32" (488 mm) D x 5-9/16" (142 mm) H	11-3/4" (299 mm)	B15	Maple	$142.80
4WDB-12SC-1	Pullout Drawer	11-23/32" (298 mm) W x 22-3/16" (564 mm) D x 5-9/16" (142 mm) H	11-3/4" (299 mm)	B15	Maple	$148.35
4WDB-15SC-1	Pullout Drawer	14-23/32" (374 mm) W x 22-3/16" (564 mm) D x 5-9/16" (142 mm) H	14-3/4" (375 mm)	B18	Maple	$157.05
4WDB-18SC-1	Pullout Drawer	17-23/32" (450 mm) W x 22-3/16" (564 mm) D x 5-9/16" (142 mm) H	17-3/4" (451 mm)	B21	Maple	$163.15
4WDB-21SC-1	Pullout Drawer	20-23/32" (527 mm) W x 22-3/16" (564 mm) D x 5-9/16" (142 mm) H	20-3/4" (528 mm)	B24	Maple	$179.35

Drawer Pullout

4WDB* Series

4WDB7-24SC-1/4WDB4-18SC-1 *Pictured with our K-Cup Insert, sold separately (three units shown)*

- Designed for 18" and 24" base cabinets
- Veneer plywood dovetail construction
- Full-extension, undermount slides w/ BLUM soft-close
- Tall drawers feature peg board bottoms with (3, 4) maple pegs and (6, 8) metal dividers
- TSCA Title VI compliant

4WDB7-24SC-1
Drawer Pullout
(24" with dividers version shown)

Drawer Pullout w/ BLUM Soft-Close

PRODUCT	DESCRIPTION	DIMS	MCO	CAB	FINISH	SLP
4WDB4-18SC-1	Standard Drawer	14-1/16" (358 mm) W x 21-21/32" (550 mm) D x 4-27/32" (124 mm) H	15" (381 mm)	B18	Maple	$323.35
4WDB7-18SC-1	Tall Drawer with dividers	14-1/16" (358 mm) W x 21-21/32" (550 mm) D x 8" (204 mm) H	15" (381 mm)	B18	Maple	$427.75
4WDB4-24SC-1	Standard Drawer	20-1/16" (510 mm) W x 21-21/32" (550 mm) D x 4-27/32" (124 mm) H	21" (533 mm)	B24	Maple	$384.25
4WDB7-24SC-1	Tall Drawer with dividers	20-1/16" (510 mm) W x 21-21/32" (550 mm) D x 8" (204 mm) H	21" (533 mm)	B24	Maple	$491.55

4PIL Series

Wood Pilaster System

4PIL27-24SC-3

NEW DESIGN!

blum

- Available in (3) rail heights:
  - 19-5/8″
  - 27-3/16″
  - 54-13/32″

  (3) rail widths:
  - 7/8″
  - 1-1/8″
  - 2-3/8″
- Slide bracket adds 1/4″ width to each side (1/2″ overall)
- All rails can be trimmed to a minimum width of 7/8″
- Drawer boxes are easy to adjust with no tools required
- No visible system holes
- Slide brackets install easily with (4) screws per drawer box
- Drawer boxese included with Pilaster System Kits only
- TSCA Title VI compliant

Wooden template for easy installation

Slide brackets install easily with (4) screws per drawer box

Brackets rest on hidden dowels allowing for effortless adjustment while maintaining stability

NOTE: See page 160 to see the Pilaster System in a pantry application.

4PIL27-24SC-3
Pilaster System Kit
((2) Standard, (1) tall shown)

4PIL-20-113-*
Pilaster Kit (Upright Only)

4WDB7-PIL-24SC-1
Tall Drawer w/ Dividers
(24" version shown)

PRODUCT	DESCRIPTION	DIMS	CAB	FINISH	SLP
Pilaster System Kits w/ BLUM Soft-Close - Slides, Uprights and Drawers					
4PIL20-18SC-2*	(1) Standard, (1) Tall w/ Dividers	16-1/2" (420 mm) W x 21-17/32" (548 mm) D x 19-5/8 - 21-9/32" (499 - 541 mm) H	B18	Maple	$537.25
4PIL20-24SC-2	(1) Standard, (1) Tall w/ Dividers	22-1/2" (572 mm) W x 21-17/32" (548 mm) D x 19-5/8 - 21-9/32" (499 - 541 mm) H	B24	Maple	$577.80
4PIL27-18SC-3	(2) Standard, (1) Tall w/ Dividers	16-1/2" (420 mm) W x 21-17/32" (548 mm) D x 27-3/16 - 28-13/16" (691 - 732 mm) H	FHB18	Maple	$640.75
4PIL27-24SC-3	(2) Standard, (1) Tall w/ Dividers	22-1/2" (572 mm) W x 21-17/32" (548 mm) D x 27-3/16 - 28-27/32" (691 - 733 mm) H	FHB24	Maple	$699.20
Pilaster Kits - Uprights Only					
4PIL-20-088-1	Pilaster Upright Kit	7/8" (23 mm) W x 3/4" (20 mm) D x 19-5/8" (499 mm) H		Maple	$97.15
4PIL-20-088-10	(10) Pilaster Upright Kits			Maple	$92.35 ea.
4PIL-20-113-1	Pilaster Upright Kit	1-1/8" (29 mm) W x 3/4" (20 mm) D x 19-5/8" (499 mm) H		Maple	$106.00
4PIL-20-113-10	(10) Pilaster Upright Kits			Maple	$100.75 ea.
4PIL-20-238-1	Pilaster Upright Kit	2-3/8" (61 mm) W x 3/4" (20 mm) D x 19-5/8" (499 mm) H		Maple	$131.20
4PIL-20-238-10	(10) Pilaster Upright Kits			Maple	$124.70 ea.
4PIL-27-088-1	Pilaster Upright Kit	7/8" (23 mm) W x 3/4" (20 mm) D x 27-3/16" (691 mm) H		Maple	$114.70
4PIL-27-088-10	(10) Pilaster Upright Kits			Maple	$108.90 ea.
4PIL-27-113-1	Pilaster Upright Kit	1-1/8" (29 mm) W x 3/4" (20 mm) D x 27-3/16" (691 mm) H		Maple	$125.00
4PIL-27-113-10	(10) Pilaster Upright Kits			Maple	$118.75 ea.
4PIL-27-238-1	Pilaster Upright Kit	2-3/8" (61 mm) W x 3/4" (20 mm) D x 27-3/16" (691 mm) H		Maple	$165.60
4PIL-27-238-10	(10) Pilaster Upright Kits			Maple	$157.30 ea.
4PIL-54-088-1	Pilaster Upright Kit	7/8" (23 mm) W x 3/4" (20 mm) D x 54-13/32" (1382 mm) H		Maple	$ 200.80
4PIL-54-088-10	(10) Pilaster Upright Kits			Maple	$190.80 ea.
4PIL-54-113-1	Pilaster Upright Kit	1-1/8" (29 mm) W x 3/4" (20 mm) D x 54-13/32" (1382 mm) H		Maple	$231.70
4PIL-54-113-10	(10) Pilaster Upright Kits			Maple	$220.10 ea.
4PIL-54-238-1	Pilaster Upright Kit	2-3/8" (61 mm) W x 3/4" (20 mm) D x 54-13/32" (1382 mm) H		Maple	$295.50
4PIL-54-238-10	(10) Pilaster Upright Kits			Maple	$280.70 ea.
Pilaster Slide Brackets					
4PIL-HDW-1	Pilaster upright hardware kit for slide attach (1 set of 4 brackets)			Silver	$11.60
4PIL-HDW-10	Pilaster upright hardware kit for slide attach (10 sets of 4 brackets)			Silver	$10.90 ea.
Utensil Pullout w/ BLUM Soft-Close					
4PUT-18SC-1	Utensil Pullout w/ (3) Bins	14-1/16" (358 mm) W x 21-21/32" (550 mm) D x 3-27/32" (98 mm) H	B18	Maple	$303.05
4PUT-24SC-1	Utensil Pullout w/ (5) Bins	20-1/16" (510 mm) W x 21-21/32" (550 mm) D x 3-27/32" (98 mm) H	B24	Maple	$395.85
Drawer Box w/ BLUM Soft-Close					
4WDB4-PIL-18SC-1	(1) Standard drawer	13-11/32" (339 mm) W x 21" (534 mm) D x 4" (102 mm) H (drawers only)	B18	Maple	$288.55
4WDB7-PIL-18SC-1	(1) Tall drawer w/ dividers	13-11/32" (339 mm) W x 21" (534 mm) D x 7" (178 mm) H (drawers only)	B18	Maple	$334.20
4WDB4-PIL-24SC-1	(1) Standard drawer for 24"	19-11/32" (492 mm) W x 21" (534 mm) D x 4" (102 mm) H (drawers only)	B24	Maple	$305.95
4WDB7-PIL-24SC-1	(1) Tall drawer w/ dividers	19-11/32" (492 mm) W x 21" (534 mm) D x 7" (178 mm) H (drawers only)	B24	Maple	$450.95

4PUT Series

Pilaster Pullout

- Designed for 18" and 24" base cabinets and to be used with our 4PIL-21* Pilaster uprights
- Natural maple dovetail construction with semi-gloss finish
- (1) drawer
- Included accessories; (1) 2 qt. and (2) 1.25 qt. stainless steel bins and (1) chrome wire basket w/ 18" or (2) 2 qt. and (3) 1.25 qt. stainless steel bins and (1) chrome wire basket w/ 24"
- Mounts to cabinet side walls
- Full-extension, undermount slides w/ BLUM soft-close
- Mount to Pilaster Rails (sold separately)
- TSCA Title VI compliant

4PUT-18SC-1

4PUT-24SC-1
Side Mount Pilaster Pullout

Pilaster Utensil Pullout

PRODUCT	DESCRIPTION	DIMS	MCO	CAB	FINISH	SLP
4PUT-18SC-1	Pilaster Utensil Pullout	14-1/16" (358 mm) W x 21-21/32" (550 mm) D x 3-27/32 - 8-7/8" (98 - 226 mm) H	15" (381 mm)	FHB9	Maple	$303.05
4PUT-24SC-1	Pilaster Utensil Pullout	20-1/16" (510 mm) W x 21-21/32" (550 mm) D x 3-27/32 - 8-7/8" (98 - 226 mm) H	21" (533 mm)	B24	Maple	$395.85

Side Mount Utensil Pullout

4WDUT Series

4WDUT-24SC-SM-1

- Designed for 18″ and 24″ base cabinets
- Natural maple dovetail construction with a semi-gloss finish
- Blum slides w/ soft-close
- (1) drawer
- Included accessories; (1) 2 qt. and (2) 1.25 qt. stainless steel bins and (1) chrome wire basket w/ 18″ or (2) 2 qt. and (3) 1.25 qt. stainless steel bins and (1) chrome wire basket w/ 24″
- Mounts to cabinet rear and side walls

4WDUT-18SC-SM-1
Side Mount Utensil Pullout

Side Mount Utensil Pullout

PRODUCT	DESCRIPTION	DIMS	MCO	CAB	FINISH	SLP
4WDUT-18SC-SM-1	Utensil Pullout	16-13/32 - 17-5/8″ (417 - 448 mm) W x 21-21/32″ (550 mm) D x 8-7/8″ (226 mm) H	15″ (381 mm)	B18	Maple	$305.95
4WDUT-24SC-SM-1	Utensil Pullout	22-13/32 - 23-5/8″ (570 - 600 mm) W x 21-21/32″ (550 mm) D x 8-7/8″ (226 mm) H	21″ (533 mm)	B24	Maple	$404.55

432TB Series

Towel Bar Base Filler Pullout

- Designed for 3″ and 6″ base cabinet applications
- Natural maple construction with semi-gloss finish
- (2) towel bars
- Single static shelf with chrome wire accents
- Full-extension, ball-bearing slides w/ soft-close
- Mounts between cabinets
- TSCA Title VI compliant

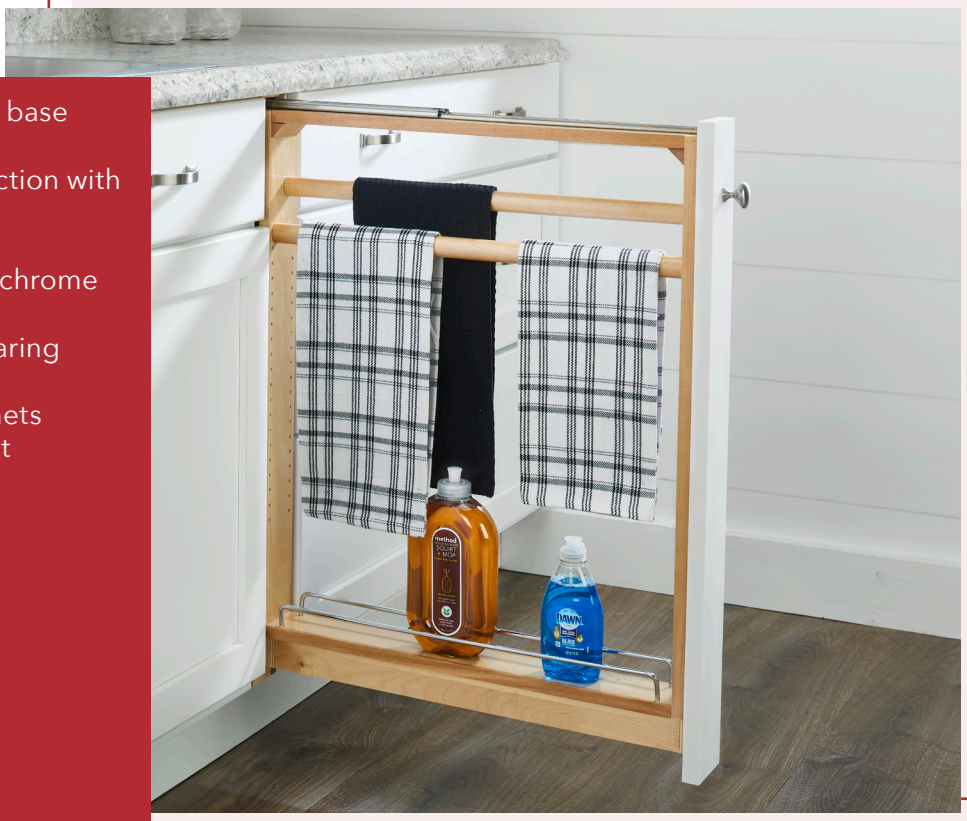

432TB-BFBBSC-3C

Natural Maple Towel Bar Base Cabinet Filler w/ Ball-Bearing Soft-Close

PRODUCT	DESCRIPTION	DIMS	FINISH	SLP
432TB-BFBBSC-3C	3″ Filler	3″ (77 mm) W x 23″ (585 mm) D x 30″ (762 mm) H	Maple	$313.20
432TB-BFBBSC-6C	6″ Filler	6″ (153 mm) W x 23″ (585 mm) D x 30″ (762 mm) H	Maple	$400.95

Base Cabinet Filler

432 Series

432-BFBBSC-3C

- Designed for 3", 6" and 9" base filler applications
- Natural maple construction with semi-gloss finish
- (2) slide configurations:
  - Full-extension, ball-bearing slides
  - Full-extension, ball-bearing slides w/ soft-close
- Adjustable shelves with chrome rails
- 3-slide design for 6" and 9" base cabinet fillers
- Create a functional storage space behind decorative panels
- TSCA Title VI compliant

432-BF-3C
Base Cabinet Filler
(3" Version shown)

432-BFBBSC-6C
Base Cabinet Filler
w/ Ball-Bearing Soft-Close
(6" Version shown)

NOTE: See page 224 for wall cabinet version

Base Cabinet Filler w/ Ball-Bearing Soft-Close

PRODUCT	DESCRIPTION	DIMS	FINISH	SLP
432-BFBBSC-3C	3" Base Filler Organizer	3" (77 mm) W x 23" (585 mm) D x 30" (762 mm) H	Maple	$278.40
432-BFBBSC-6C	6" Base Filler Organizer	6" (153 mm) W x 23" (585 mm) D x 30" (762 mm) H	Maple	$395.15
Base Cabinet Filler				
432-BF-3C	3" Base Filler Organizer	3" (77 mm) W x 23" (585 mm) D x 30" (762 mm) H	Maple	$247.95
432-BF-6C	6" Base Filler Organizer	6" (153 mm) W x 23" (585 mm) D x 30" (762 mm) H	Maple	$349.45
432-BF-9C	9" Base Filler Organizer	9" (229 mm) W x 23" (585 mm) D x 30" (762 mm) H	Maple	$494.45

432 Series

BLUM® Base Cabinet Filler

- Designed for 3", 6" and 9" base filler applications
- Natural maple construction with semi-gloss finish
- Full-extension, undermount slides w/ BLUM soft-close
- Patented undermount soft-close slide system (US Patent No. 8,733,865)
- (2) Adjustable shelves with chrome rails
- Fixed middle shelf for added support
- Create a functional storage space behind those decorative panels
- TSCA Title VI compliant

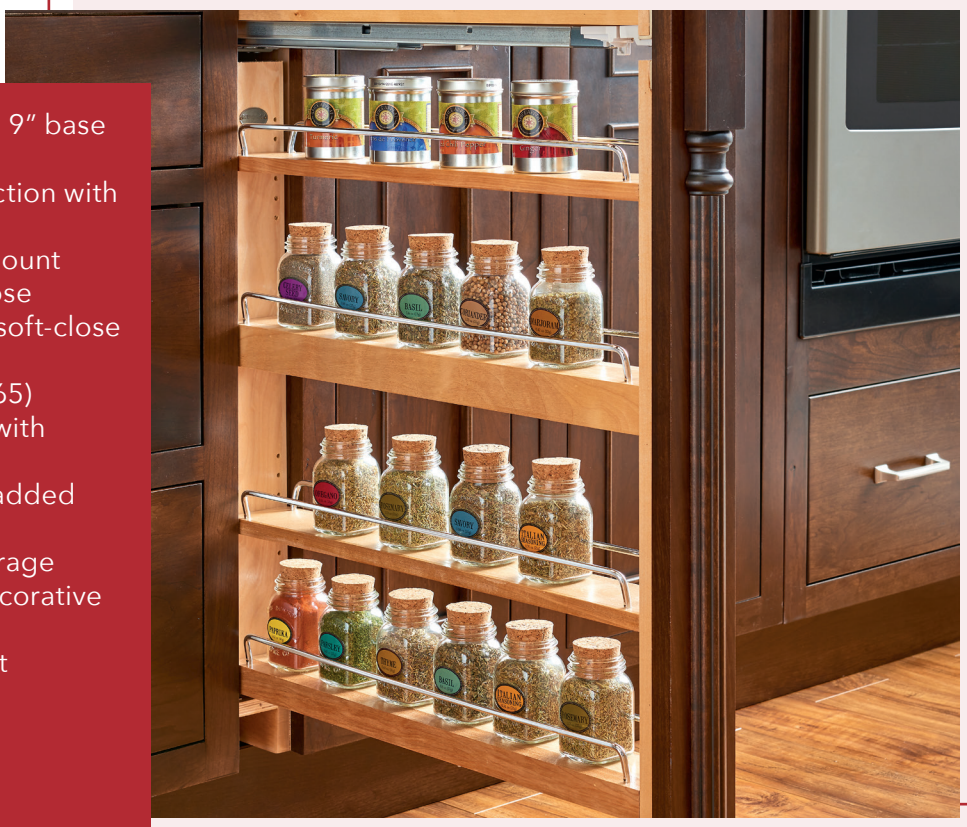

432-BFSC-3C

432-BFSC-6C
Base Cabinet Filler
(6" version shown)

432-BFSC-9C
Base Cabinet Filler
(9" version shown)

Jack screw for door micro-adjustments

Base Cabinet Filler w/ BLUM Soft-Close

PRODUCT	DESCRIPTION	DIMS	FINISH	SLP
432-BFSC-3C	3" Base Filler Organizer	3" (77 mm) W x 23" (585 mm) D x 30" (762 mm) H	Maple	$363.95
432-BFSC-6C	6" Base Filler Organizer	6" (153 mm) W x 23" (585 mm) D x 30" (762 mm) H	Maple	$450.95
432-BFSC-9C	9" Base Filler Organizer	9" (229 mm) W x 23" (585 mm) D x 30" (762 mm) H	Maple	$539.40

Base Organizer Pullout

438 Series

438-BC-3C

- Designed for full height 6" and 9" base cabinets
- Fully assembled natural maple construction with chrome accents
- (2) slide configurations:
  - Full-extension, ball-bearing, slides
  - Full-extension, undermount slides w/ BLUM soft-close
- Patented undermount soft-close slide system (US Patent No. 8,733,865)
- Trimmable to 26-3/8" height for custom cabinets
- Adjustable shelves
- Designed with top slide for complete stability
- TSCA Title VI compliant

438-BCSC-6C
Base Organizer
(6" version shown)

NOTE: Our customers asked... so we delivered! We took the best features of our 448 Series Base Organizers and our 432 Series Filler Organizers and created this product specifically for use in full height B6 and B9 cabinets.

PRODUCT	DESCRIPTION	DIMS	MCO	CAB	FINISH	SLP
Base Organizer						
438-BC-3C	Base Organizer for 6"	3" (77 mm) W x 23" (585 mm) D x 27-5/16" (694 mm) H	3" (76 mm)	FHB6	Maple	$246.50
438-BC-6C	Base Organizer for 9"	6" (153 mm) W x 23" (585 mm) D x 27-5/16" (694 mm) H	6" (152 mm)	FHB9	Maple	$364.70
Base Organizer w/ BLUM Soft-Close						
438-BCSC-3C	Base Organizer for 6"	3" (77 mm) W x 23" (585 mm) D x 27-5/16" (694 mm) H	3" (76 mm)	FHB6	Maple	$407.45
438-BCSC-6C	Base Organizer for 9"	6" (153 mm) W x 23" (585 mm) D x 27-5/16" (694 mm) H	6" (152 mm)	FHB9	Maple	$520.55

448 Series

Ball-Bearing Base Cabinet Pullout

448-BCBBSC-8C

All Units:
- Natural maple construction with a semi-gloss finish
- Adjustable shelves with chrome rails
- Patented door-mount brackets provide 5" of adjustability and include micro-trim adjuster (US Patent No. 8,388,076)
- TSCA Title VI compliant

Soft-Close Units:
- Designed for 9"and 12" full height face frame base cabinets
- Full-extension, ball-bearing slides w/ soft-close
- Adjustable rub bushings

Ball-Bearing Units:
- Designed for 9", 12", 15" and 18" full height face frame base cabinets, and 9" full height frameless cabinets
- Patented "tri-slides" which minimize any side-to-side motion (US Patent No. 7,306,301)
- Patented mounting straps (US Patent No. 9,756,941)

Minimum Cabinet Opening

PRODUCT #	MCO FF	MCO FL
448-BCBBSC-5C	5-1/2" (140 mm)	5-1/2" (140 mm)
448-BCBBSC-8C	8-1/2" (216 mm)	8-1/2" (216 mm)
448-BC-5C	5-1/2" (140 mm)	5-1/2" (140 mm)
448-BC-6C	7" (178 mm)	7" (178 mm)
448-BC-8C	8-1/2" (216 mm)	8-1/2" (216 mm)
448-BC-11C	11-1/2" (292 mm)	11-1/2" (292 mm)
448-BC-14C	14-1/2" (368 mm)	14-1/2" (368 mm)

NOTE: See page 216 for wall cabinet version

Adjustable shelves

Adjustable door-mount brackets
(US Patent No: 8,388,076) and jack screw
for precise door alignment

Adjustable rear wall

448-BC-8C
Base Cabinet Pullout
(8" version shown)

448-BCBBSC-5C
Base Cabinet Pullout w/ Soft-Close
(5" version shown)

Adjustable threaded rub
bushings included for
custom applications

Plastic rub bushings
included for 1.5" and 1.75"
face frame applications

IDRB-1
Adjustable Rub Bushing set for Inset
applications (1) for each side
(Sold separately)

(For inset applications, we recommend our IDRB bushing. The discreet design prevents side-to-side movement and fits behind the frame, eliminating the need for surface drilling-giving you a seamless look and unparalleled stability.)

448-08SC-SRI-1
Spice Rack Insert
(448-BCBBSC-8C version shown)
(Sold separately)

PRODUCT	DESCRIPTION	DIMS	CAB	FINISH	SLP
Base Cabinet Pullout w/ Ball-Bearing Soft-Close					
448-BCBBSC-5C	Base Organizer	5" (127 mm) W x 21-21/32" (550 mm) D x 25-1/2" (648 mm) H	FHB9	Maple	$372.65
448-BCBBSC-8C	Base Organizer	8" (204 mm) W x 21-21/32" (550 mm) D x 25-1/2" (648 mm) H	FHB12	Maple	$398.00
Base Cabinet Pullout					
448-BC-5C	Base Organizer	5" (127 mm) W x 22-1/2" (572 mm) D x 25-1/2" (648 mm) H	FHB9	Maple	$268.25
448-BC-6C	Frameless Organizer	6-1/2" (166 mm) W x 22-1/2" (572 mm) D x 25-1/2" (648 mm) H	FHB9	Maple	$277.70
448-BC-8C	Base Organizer	8" (204 mm) W x 22-1/2" (572 mm) D x 25-1/2" (648 mm) H	FHB12	Maple	$303.05
448-BC-11C	Base Organizer	11" (280 mm) W x 22-1/2" (572 mm) D x 25-1/2" (648 mm) H	FHB15	Maple	$478.50
448-BC-14C	Base Organizer	14" (356 mm) W x 22-1/2" (572 mm) D x 25-1/2" (648 mm) H	FHB18	Maple	$537.95
Spice Rack Insert for Base Cabinet Pullout					
448-08SC-SRI-1	For 448-BCBBSC-8C	7" (178 mm) W x 19-7/16" (494 mm) D x 4-7/8" (124 mm) H		Maple	$73.95
448-SR8-1	For 448-BC-8C	7" (178 mm) W x 21" (534 mm) D x 4-7/8" (124 mm) H		Maple	$68.15
448-SR11-1	For 448-BC-11C	10" (254 mm) W x 21" (534 mm) D x 4-7/8" (124 mm) H		Maple	$85.55
Accessories					
IDRB-1	Adjustable Rub Bushing for Inset Applications			Metal	$11.60

448SW Series

Swivel Shelf Pullout

- Designed for 9″ and 12″ full height face frame base cabinets
- Natural maple construction with a semi-gloss finish
- Full-extension, undermount slides w/ BLUM soft-close
- Patent-pending design
- Built-in “Extension Lock”
- Adjustable rear wall
- (2) swivel shelves with built-in self-centering axis system
- Adjustable accessory top shelf
- Chrome accents
- Patented door-mount brackets provide 5″ of door mounting adjustability and include micro door trim adjustment (US Patent No. 8,388,076)
- Mounts to cabinet door and floor
- TSCA Title VI Compliant

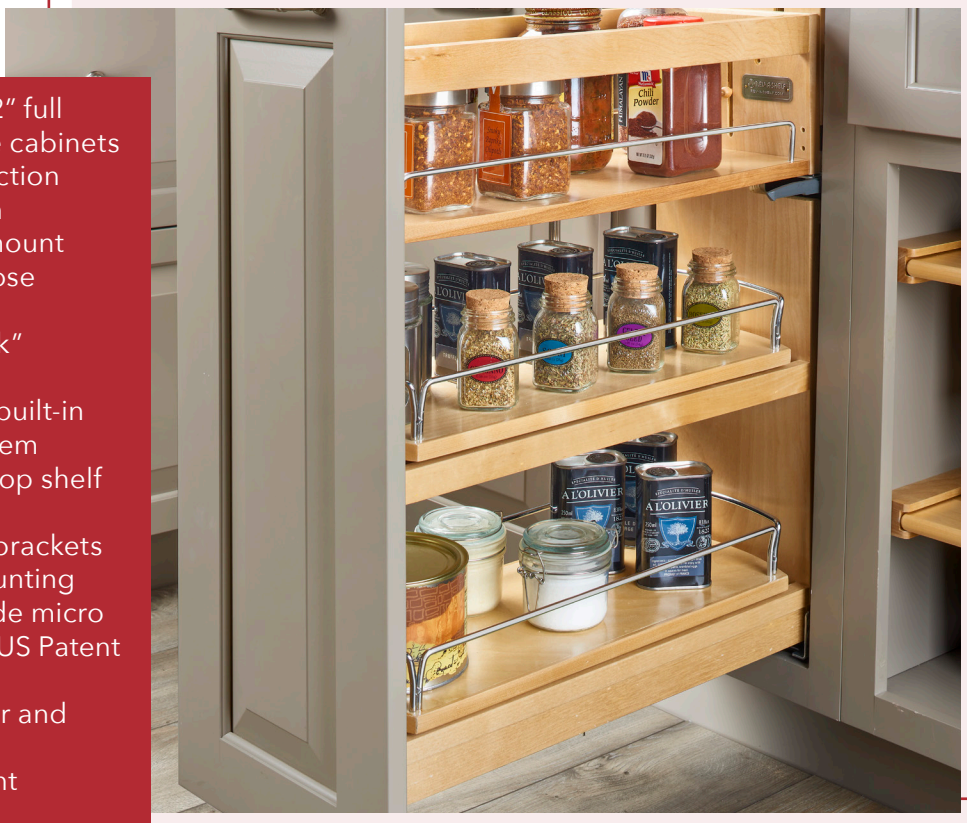

448SW-BCSC-8C

Built-in extension lock

Swivel Shelf Base Cabinet Pullout w/ BLUM Soft-Close

PRODUCT	DESCRIPTION	DIMS	MCO	CAB	FINISH	SLP
448SW-BCSC-5C	Swivel Pullout	5-3/4 - 6″ (147 - 153 mm) W x 22-25/32″ (579 mm) D x 25-5/8″ (652 mm) H	FF: 5-3/4″ (146 mm) FL: 6″ (152 mm)	FHB9	Maple	$546.65
448SW-BCSC-8C	Swivel Pullout	8-3/4″ (223 mm) W x 22-25/32″ (579 mm) D x 25-5/8 - 29-1/2″ (652 - 750 mm) H	FF: 8-3/4″ (222 mm) FL: 9″ (229 mm)	FHB12	Maple	$668.45

Sidekick Pullout

448SK Series

448-BSKT-3C

- Designed to ONLY be mounted to 448BCSC Series pullouts*
- Patent-pending design
- Natural maple construction with chrome accents
- (2) configurations available; Spices or Tray/Foil wrap holder
- Add 3" to the existing compatible* 448 footprint per sidekick (3" sidekick attached to 5" 448 fits in an 8" opening)
- Full-extension, ball-bearing slide w/ soft-close
- Slides independently, providing complete access to the attached 448
- TSCA Title VI compliant

* Not compatible with 448SW, 448-BCBBSC, 448-BC, 448-BDDSC or 448-BC19SC-5C reduced depth pullouts

448-BSKT-3C
Tray Holder Sidekick

Sidekick Pullout

PRODUCT	DESCRIPTION	DIMS	FINISH	SLP
448-BSKT-3C	Tray Holder Sidkick	3" (77 mm) W x 20-3/4" (528 mm) D x 23-15/16" (608 mm) H	Maple	$253.75
448-BSKS-3C	Spice Holder SideKick	3" (77 mm) W x 20-3/4" (528 mm) D x 23-15/16" (608 mm) H	Maple	$250.85

448 Series

BLUM® Soft-Close Base Cabinet Pullouts

All Units:
- Natural maple construction with a semi-gloss finish
- Patented door-mount brackets provide 5" of adjustability and include a micro-trim adjuster (US Patent No. 8,388,076)
- Adjustable rub bushings
- Full-extension, undermount slides w/ BLUM soft-close
- Patented mounting straps (US Patent No. 9,756,941)
- TSCA Title VI compliant

448-BCSC
- Designed for full access 9", 12", face frame 9", 12", 15" and 18" full height and 9", 12" and 15" drawer/door base cabinets
- Adjustable shelves with chrome rails.

448OXO
- Designed for 12" full height base cabinets
- (7) BPA free OXO® Good Grips POP containers - (3) 4.3 qt. - (3) 1.7 qt. - (1) 2.6 qt.

448KB
- Designed for 9", 12" and 15" full height face frame base cabinets, and 12" full height full access cabinets
- (1) 2 qt. or (1) 2 qt. and (3) 1.25 qt. removable stainless steel bins
- Knife block's flex rod technology adjusts to hold knives securely
- (4) flexible plastic cutting mats
- Adjustable accessory shelf and lower static shelf with chrome rails

448UT
- Designed for 9" and 12" full height base cabinets
- (3) 1.25 qt. or (3) 2 qt. stainless steel bins
- Adjustable shelves and rear wall for added stability

448PTH
- Designed for 12" full height face frame base cabinets, and 9" full height full access cabinets
- Refillable paper towel holder

448-BCSC-8C & 448-08SC-SRI-1

Scan for video

448PTH-BCSC-8C
Paper Towel Pullout
(8" version shown)

448-BDDSC-11C
Drawer/Door Base Cabinet Pullout
(11" version shown)

448-BCSC-9C
Base Cabinet Pullout for Full Access
(9" version shown)

448-BCSCSD-5C
Base Cabinet Pullout
w/ SERVO-DRIVE
(5" version shown)

448-BC19SC-5C
Base Cabinet Pullout,
Reduced Depth
(5" version shown)

448-BDDSC-11C
Base Cabinet Pullout
for Drawer/Door
(11" version shown)

With flexible cutting mats

448KB-BCSC-8C
Base Cabinet Pullout
w/ Knife Block and Utensil Bin
(8" unit shown)

448OXO-BCSC-8C
Base Cabinet Pullout
w/ OXO® Containers

448UT-BCSC-5C
Base Cabinet Pullout
w/ Utensil Bins
(5" unit shown)

448-08SC-SRI-1
Spice Rack
(7" version shown)
Sold separately

448KB-BCSC-11C
Base Cabinet Pullout
w/ Knife Block and
Utensil Bins
(11" unit shown)

448PTH-BCSC-8C
Base Cabinet Pullout
w/ Paper Towel Holder
(8" unit shown)

Adjustable threaded rub bushings included for custom applications

Plastic rub bushings included for 1.5" and 1.75" face frame applications

Minimum Cabinet Opening **Cont'd**

PRODUCT #	MCO FF	MCO FL
448-BCSC-5C	5-1/2" (140 mm)	6" (152 mm)
448-BC19SC-5C	5-1/2" (140 mm)	6" (152 mm)
448-BCSC-8C	8-1/2" (216 mm)	9" (229 mm)
448-BC19SC-8C	8-1/2" (216 mm)	9" (229 mm)
448-BCSC-11C	11-1/2" (292 mm)	12" (305 mm)
448-BCSC-14C	14-1/2" (368 mm)	15" (381 mm)
448-BCSC-6C	7-1/2" (191 mm)	7-1/2" (191 mm)
448-BCSC-9C	10-1/2" (268 mm)	10-1/2" (268 mm)
448-BCSCSD-5C	5-1/2" (140 mm)	6" (152 mm)
448-BCSCSD-8C	8-1/2" (216 mm)	9" (229 mm)
448-BDDSC-5C	5-1/2" (140 mm)	6" (152 mm)
448-BDDSC-8C	8-1/2" (216 mm)	9" (229 mm)
448-BDDSC-11C	11-1/2" (292 mm)	12" (305 mm)
448KB-BCSC-5C	5-1/2" (140 mm)	6" (152 mm)
448KB-BCSC-6C	7-1/2" (191 mm)	7-1/2" (191 mm)
448KB-BCSC-8C	8-1/2" (216 mm)	9" (229 mm)
448KB-BCSC-9C	10-1/2" (267 mm)	10-1/2" (267 mm)
448KB-BCSC-11C	11-1/2" (292 mm)	12" (305 mm)
448OXO-BCSC-8C	8-1/2" (216 mm)	9" (229 mm)

Specs on the following page

448 Series

PRODUCT #	MCO FF	MCO FL
448UT-BCSC-5C	5-1/2" (140 mm)	6" (152 mm)
448UT-BCSC-6C	7-1/2" (191 mm)	7-1/2" (191 mm)
448UT-BCSC-8C	8-1/2" (216 mm)	9" (229 mm)
448UT-BCSC-9C	10-1/2" (267 mm)	10-1/2" (267 mm)
448UT-BCSC-11C	11-1/2" (292 mm)	12" (305 mm)
448PTH-BCSC-6C	6-5/8" (169 mm)	7-1/8" (181 mm)
448PTH-BCSC-8C	8-1/2" (216 mm)	9" (229 mm)

448KB Scan for video

448UT Scan for video

448OXO Scan for video

448PT Scan for video

448SW Scan for video

Base Cabinet Pullout w/ BLUM Soft-Close for Full Height

PRODUCT	DESCRIPTION	DIMS	CAB	FINISH	SLP
448-BCSC-5C	Base Organizer	6" (153 mm) W x 21-5/8" (550 mm) D x 25-1/2" (648 mm) H	FHB9	Maple	$396.55
448-BC19SC-5C	Base Organizer*	6" (153 mm) W x 19-5/8" (499 mm) D x 25-1/2" (648 mm) H	FHB9	Maple	$403.10
448-BCSC-8C	Base Organizer	8-3/4" (223 mm) W x 21-5/8" (550 mm) D x 25-1/2" (648 mm) H	FHB12	Maple	$424.85
448-BC19SC-8C	Base Organizer*	8-3/4" (223 mm) W x 19-5/8" (499 mm) D x 25-1/2" (648 mm) H	FHB12	Maple	$481.40
448-BCSC-11C	Base Organizer	11-3/4" (299 mm) W x 21-5/8" (550 mm) D x 25-1/2" (648 mm) H	FHB15	Maple	$535.05
448-BCSC-14C	Base Organizer	14-3/4" (375 mm) W x 21-5/8" (550 mm) D x 25-1/2" (648 mm) H	FHB18	Maple	$598.85
Full Access Base Cabinet Pullout w/ BLUM Soft-Close					
448-BCSC-6C	Base Organizer	7-1/4" (185 mm) W x 21-5/8" (550 mm) D x 25-1/2" (648 mm) H	FLFHB9	Maple	$413.25
448-BCSC-9C	Base Organizer	10-1/4" (261 mm) W x 21-5/8" (550 mm) D x 25-1/2" (648 mm) H	FLFHB12	Maple	$491.55
Base Cabinet Pullout w/ BLUM Soft-Close and SERVO-DRIVE					
448-BCSCSD-5C	Base Organizer	6" (153 mm) W x 22-3/4 - 24-1/4" (578 - 616 mm) D x 25-1/2" (648 mm) H	FHB9	Maple	$1,087.50
448-BCSCSD-8C	Base Organizer	8-3/4" (223 mm) W x 22-3/4 - 24-1/4" (578 - 616 mm) D x 25-1/2" (648 mm) H	FHB12	Maple	$1,147.80
Base Cabinet Pullout w/ BLUM Soft-Close for Drawer/Door					
448-BDDSC-5C	Base Organizer	6" (153 mm) W x 21-5/8" (550 mm) D x 19-3/8" (493 mm) H	B9	Maple	$297.25
448-BDDSC-8C	Base Organizer	8-3/4" (223 mm) W x 21-5/8" (550 mm) D x 19-3/8" (493 mm) H	B12	Maple	$378.45
448-BDDSC-11C	Base Organizer	11-3/4" (299 mm) W x 21-5/8" (550 mm) D x 19-3/8" (493 mm) H	B15	Maple	$450.95
Spice Rack Insert for Base Cabinet Pullout					
448-08SC-SRI-1	Spice Rack	7" (178 mm) W x 19-7/16" (494 mm) D x 4-7/8" (124 mm) H		Maple	$73.95
448-11SC-SRI-1	Spice Rack	10" (254 mm) W x 19-7/16" (494 mm) D x 4-7/8" (124 mm) H		Maple	$94.25
Base Cabinet Pullout w/ Knife Block and Utensil Bins w/ BLUM Soft-Close					
448KB-BCSC-5C	Base Organizer w/ (1) 1.25 qt. Bin	6" (153 mm) W x 21-5/8" (550 mm) D x 25-1/2" (648 mm) H	FHB9	Maple	$581.45
448KB-BCSC-8C	Base Organizer w/ (1) 2 qt. Bin	8-3/4" (223 mm) W x 21-5/8" (550 mm) D x 25-1/2" (648 mm) H	FHB12	Maple	$710.50
448KB-BCSC-11C	Base Organizer w/ (3) 1.25 qt. & (1) 2 qt. Bins	11-3/4" (299 mm) W x 21-5/8" (550 mm) D x 25-1/2" (648 mm) H	FHB15	Maple	$856.95
Full Access Base Cabinet Pullout w/ Knife Block and Utensil Bins w/ BLUM Soft-Close					
448KB-BCSC-6C	Base Organizer w/ (1) 1.25 qt. Bin	7-1/8" (182 mm) W x 21-5/8" (550 mm) D x 25-1/2" (648 mm) H	FLFHB9	Maple	$638.00
448KB-BCSC-9C	Base Organizer w/ (1) 2 qt. Bin	10-1/8" (258 mm) W x 21-5/8" (550 mm) D x 25-1/2" (648 mm) H	FLFHB12	Maple	$739.50
Base Cabinet Pullout w/ (3) Utensil Bins and BLUM Soft-Close					
448UT-BCSC-5C	Base Organizer w/ (3) 1.25 qt Bins	6" (153 mm) W x 21-5/8" (550 mm) D x 25-1/2" (648 mm) H	FHB9	Maple	$442.25
448UT-BCSC-8C	Base Organizer w/ (3) 2 qt. Bins	8-3/4" (223 mm) W x 21-5/8" (550 mm) D x 25-1/2" (648 mm) H	FHB12	Maple	$529.25
448UT-BCSC-11C	Base Organizer w/ (6) 1.25 qt Bins	11-3/4" (298 mm) W x 21-5/8" (549 mm) D x 25-1/2 - 29-1/2" (648 - 749 mm) H	FHB15	Maple	$653.95
Full Access Base Cabinet Pullout w/ (3) Utensil Bins and BLUM Soft-Close					
448UT-BCSC-6C	Base Organizer w/ (3) 1.25 qt Bins	7-1/8" (181 mm) W x 21-21/32" (550 mm) D x 25-1/2" (648 mm) H	FLFHB9	Maple	$500.25
448UT-BCSC-9C	Base Organizer w/ (3) 2 qt Bins	10-1/8" (258 mm) W x 21-21/32" (550 mm) D x 25-1/2" (648 mm) H	FLFHB12	Maple	$572.75
Base Cabinet Pullout w/ OXO® Containers and BLUM Soft-Close					
448OXO-BCSC-8C	Base Organizer	8-3/4" (223 mm) W x 21-5/8" (550 mm) D x 25-19/32" (650 mm) H	FHB12	Maple	$869.30
Paper Towel Holder Base Cabinet Pullout w/ BLUM Soft-Close					
448PTH-BCSC-6C	Paper Towel Pullout	6-7/8" (175 mm) W x 21-23/32" (552 mm) D x 26-29/32 - 30-7/8" (684 - 785 mm) H	FHB9 FLFHB12	Maple	$408.20
448PTH-BCSC-8C	Paper Towel Pullout	8-3/4" (223 mm) W x 21-23/32" (552 mm) D x 26-29/32 - 30-7/8" (684 - 785 mm) H	FHB12	Maple	$471.95

Base Cabinet Pullout Tray Divider/Foil Wrap Holder

447 Series

447-BCSC-9C

- Designed for 9" and 12" base cabinets
- Natural maple construction with semi-gloss finish
- Full-extension, undermount slides w/ BLUM soft-close
- Patented mounting straps (US Patent No. 9,756,941)
- Removable center T-Bar divider for taller items
- Patented door-mount brackets provide 5" of adjustability and include micro-trim adjuster (US Patent No. 8,388,076)
- TSCA Title VI compliant

Included T-Bars allow you to customize your storage needs

447-BCSC-5C
Base Cabinet Pullout w/ Utensil Bins
(5" unit shown)

Adjustable threaded rub bushings included for custom applications

Plastic rub bushings included for 1-1/2" and 1-3/4" face frame applications

Minimum Cabinet Opening

PRODUCT #	MCO FF	MCO FL
447-BCSC-5C	5-1/2" (140 mm)	6" (152 mm)
447-BCSC-8C	8-1/2" (216 mm)	9" (229 mm)
447-BCSC-6C	7-1/2" (191 mm)	7-1/2" (191 mm)
447-BCSC-9C	10-1/2" (267 mm)	10-1/2" (267 mm)

Base Cabinet Pullout Tray Divider/Foil Wrap Holder w/ BLUM Soft-Close

PRODUCT	DESCRIPTION	DIMS	CAB	FINISH	SLP
447-BCSC-5C	Base Cabinet Pullout	5-15/16" (151 mm) W x 21-21/32" (551 mm) D x 19-1/2" (496 mm) H	B9	Maple	$406.00
447-BCSC-8C	Base Cabinet Pullout	8-23/32" (222 mm) W x 21-21/32" (551 mm) D x 19-1/2" (496 mm) H	B12	Maple	$449.50
Full Access Base Cabinet Pullout Tray Divider/Foil Wrap Holder w/ BLUM Soft-Close					
447-BCSC-6C	Base Cabinet Pullout	7-1/8" (181 mm) W x 21-21/32" (551 mm) D x 19-1/2" (496 mm) H	FLB9	Maple	$420.50
447-BCSC-9C	Base Cabinet Pullout	10-1/8" (258 mm) W x 21-21/32" (551 mm) D x 19-1/2" (496 mm) H	FLB12	Maple	$491.55

449 Series

Side and Bottom Mount Base Pullout

449KB-BCSC-8C

Scan for video

- Designed for 9″ and 12″ full height base cabinets
  - Face frame fit 1-3/4″, 1-1/2″ and 1-5/8″
  - Full access fit 3/4″ and 5/8″
- Natural maple construction with semi-gloss finish
- (2) adjustable shelves for base organizer and (1) adjustable shelf for utensil organizer with chrome accents
- Utensil organizer features (3) 1.25 qt. removable stainless steel bins
- Full-extension, undermount slides w/ BLUM soft-close
- Face frame version features patented foldable slide set for easy installation
- Mounts to cabinet door, floor and side
- Patented foldable slide set for easy installation for 449, 449UT and 449KB 5C and 8C units (US Patent No. 10,799,020)
- Patented door-mount brackets provide 5″ of adjustability and include micro-trim adjuster (US Patent No. 8,388,076)
- TSCA Title VI compliant

Full access slide location

Face frame slide location

Adjustable "L" bracket for side mount

Spacer allows for multiple face frame sizes

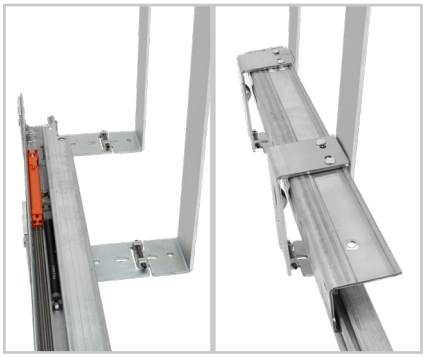

Patented face frame foldable slide set for easy installation. *(US Patent No. 10,799,020)*

449KB-BCSC-8C
Side and Bottom Mount
Knife Block Base Pullout
(8" version shown)

449-BCSC-5C
Side and Bottom Mount
Base Pullout
(5" version shown)

449-BCSC-7C
Full Access Side and Bottom Mount
Base Pullout
(7" version shown)

449-BCSC-8C
Side and Bottom Mount
Base Pullout
(8" version shown)

449UT-BCSC-7C
Full Access Side and Bottom Mount
Utensil Base Pullout
(7" version shown)

Side and Bottom Mount Base Pullout w/ BLUM Soft-Close

PRODUCT	DESCRIPTION	DIMS	MCO	CAB	FINISH	SLP
449-BCSC-5C	Base Organizer	6-1/4" (159 mm) W x 21-3/4" (553 mm) D x 25-19/32" (650 mm) H	5-1/2" (140 mm)	FHB9	Maple	$463.55
449-BCSC-8C	Base Organizer	9-1/4" (235 mm) W x 21-3/4" (553 mm) D x 25-19/32" (650 mm) H	8-1/2" (216 mm)	FHB12	Maple	$515.50
Full Access Side and Bottom Mount Base Pullout w/ BLUM Soft-Close						
449-BCSC-7C	Base Organizer	7-1/2" (191 mm) W x 21-3/4" (553 mm) D x 25-1/4" (642 mm) H	7-1/2" (191 mm)	FLFHB9	Maple	$464.70
449-BCSC-10C	Base Organizer	10-1/2" (267 mm) W x 21-3/4" (553 mm) D x 25-1/4" (642 mm) H	10-1/2" (267 mm)	FLFHB12	Maple	$512.85
Side and Bottom Mount Utensil Base Pullout w/ BLUM Soft-Close						
449UT-BCSC-5C	Utensil Organizer	6-1/4" (159 mm) W x 21-3/4" (553 mm) D x 25-19/32" (650 mm) H	5-1/2" (140 mm)	FHB9	Maple	$492.25
449UT-BCSC-8C	Utensil Organizer	9-1/4" (235 mm) W x 21-3/4" (553 mm) D x 25-19/32" (650 mm) H	8-1/2" (216 mm)	FHB12	Maple	$601.75
Full Access Side and Bottom Mount Utensil Base Pullout w/ BLUM Soft-Close						
449UT-BCSC-7C	Utensil Organizer	7-1/2" (191 mm) W x 21-3/4" (553 mm) D x 25-1/4" (642 mm) H	7-1/2" (191 mm)	FLFHB9	Maple	$492.25
449UT-BCSC-10C	Utensil Organizer	10-1/2" (267 mm) W x 21-3/4" (553 mm) D x 25-1/4" (642 mm) H	10-1/2" (267 mm)	FLFHB12	Maple	$572.75
Side and Bottom Mount Knife Block Base Pullout w/ BLUM Soft-Close						
449KB-BCSC-8C	Base Organizer w/ (1) Bin	9-9/32" (236 mm) W x 21-3/4" (553 mm) D x 25-19/32" (650 mm) H	8-1/2" (216 mm)	FHB12	Maple	$683.65

5322 Series

Contemporary Base Cabinet Pullouts

All Units:
- Solid bottom shelves with chrome-plated round wire, gray or natural maple or orion gray flat wire with textured linen finish
- Full-extension, undermount slides w/ BLUM soft-close
- Patented door-mount brackets (US Patent No. 8,047,621)
- TSCA Title VI compliant

5322-BCSC
- Designed for 9", 12" and 15" face frame base cabinets and 9" and 12" full access base cabinets
- 5322-BCSC-5 mounts to the cabinet side wall
- 5322-BCSC-8 and 11 mounts to cabinet floor

5322KB
- Designed for 9" full access cabinets and 12" and 15" full access and face frame base cabinets
- (1) 2 qt. or (2) 2 qt. and (2) 1.25 qt. removable stainless steel bins
- Knife block features flex rod technology that adjusts to hold knives securely

5322UT
- Designed for 12" base cabinets
- (3) 2 qt. or (3) 1.25 qt. removable stainless steel bins

Designed in cooperation with SIGE

Scan for video

Minimum Cabinet Opening *5322KB-BCSC-6-FOG*

PRODUCT #	MCO FF	MCO FL
5322-BCSC-6-**	7" (178 mm)	7-1/2" (191 mm)
5322-BCSC-9-**	10" (254 mm)	10-1/2" (268 mm)
5322-BCSC-6-FOG	7" (178 mm)	7-1/2" (191 mm)
5322-BCSC-9-FOG	10" (254 mm)	10-1/2" (268 mm)
5322-BCSC-5-**	6" (152 mm)	6" (152 mm)
5322-BCSC-8-**	8-1/2" (216 mm)	9" (229 mm)
5322-BCSC-11-**	11-1/2" (292 mm)	12" (305 mm)
5322KB-BCSC-6-**	7" (178 mm)	7-1/2" (191 mm)
5322KB-BCSC-9-**	10" (254 mm)	10-1/2" (267 mm)
5322KB-BCSC-6-FOG	7" (178 mm)	7-1/2" (191 mm)
5322KB-BCSC-8-**	8-1/2" (216 mm)	9" (229 mm)
5322KB-BCSC-11-**	11-1/2" (292 mm)	12" (305 mm)
5322UT-BCSC-6-**	7" (178 mm)	7-1/2" (191 mm)
5322UT-BCSC-6-FOG	7" (178 mm)	7-1/2" (191 mm)
5322UT-BCSC-8-**	8-1/2" (216 mm)	9" (229 mm)

Solid bottom shelves in maple or gray, with chrome accents or orion gray with flat wire

5322-BCSC-5-MP
Face Frame
Contemporary Base Cabinet Pullout
(5" Maple version shown)
(Side mount only)

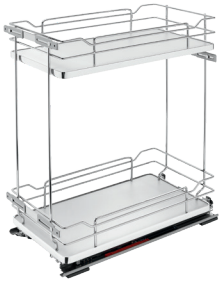

5322-BCSC-11-GR
Contemporary Base Cabinet Pullout w/ Soft-Close
(11" Gray version shown)

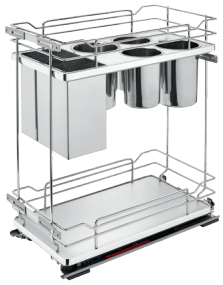

5322KB-BCSC-11-GR
Contemporary Base Cabinet Pullout w/ Knife Block and Utensil Bins
(11" Gray version shown)

5322UT-BCSC-6-FOG
Contemporary Base Cabinet Pullout w/ Utensil Bins
(6" Orion Gray version shown)

Full Access Contemporary Base Cabinet Pullout w/ BLUM Soft-Close

PRODUCT	DESCRIPTION	DIMS	CAB	FINISH	SLP
5322-BCSC-6-GR	Base Organizer	7-1/4" (185 mm) W x 21-11/16" (551 mm) D x 24-1/4" (616 mm) H	FLFHB9	Gray	$521.15
5322-BCSC-6-MP	Base Organizer	7-1/4" (185 mm) W x 21-11/16" (551 mm) D x 24-1/4" (616 mm) H	FLFHB9	Maple	$522.00
5322-BCSC-9-GR	Base Organizer	10-1/4" (261 mm) W x 21-11/16" (551 mm) D x 24-1/4" (616 mm) H	FLFHB12	Gray	$537.65
5322-BCSC-9-MP	Base Organizer	10-1/4" (261 mm) W x 21-11/16" (551 mm) D x 24-1/4" (616 mm) H	FLFHB12	Maple	$544.60
5322-BCSC-6-FOG	Base Organizer	7-1/4" (185 mm) W x 21-11/16" (551 mm) D x 24-1/4" (616 mm) H	FLFHB9	Orion Gray	$551.00
5322-BCSC-9-FOG	Base Organizer	10-1/4" (261 mm) W x 21-11/16" (551 mm) D x 24-1/4" (616 mm) H	FLFHB12	Orion Gray	$580.00
Face Frame Contemporary Base Cabinet Pullout w/ BLUM Soft-Close					
5322-BCSC-5-GR	Base Organizer	6" (153 mm) W x 22-1/4" (566 mm) D x 24-1/2" (623 mm) H	FFFHB9	Gray	$478.50
5322-BCSC-5-MP	Base Organizer	6" (153 mm) W x 22-1/4" (566 mm) D x 24-1/2" (623 mm) H	FFFHB9	Maple	$478.50
5322-BCSC-8-GR	Base Organizer	8-3/4" (223 mm) W x 21-11/16" (551 mm) D x 24-1/4" (616 mm) H	FFFHB12	Gray	$576.10
5322-BCSC-8-MP	Base Organizer	8-3/4" (223 mm) W x 21-11/16" (551 mm) D x 24-1/4" (616 mm) H	FFFHB12	Maple	$580.00
5322-BCSC-11-GR	Base Organizer	11-3/4" (299 mm) W x 21-11/16" (551 mm) D x 24-1/4" (616 mm) H	FFFHB15	Gray	$601.75
5322-BCSC-11-MP	Base Organizer	11-3/4" (299 mm) W x 21-11/16" (551 mm) D x 24-1/4" (616 mm) H	FFFHB15	Maple	$601.75
Full Acess Contemporary Knife Block Base Cabinet Pullout w/ BLUM Soft-Close					
5322KB-BCSC- 6-GR	Base Organizer w/ (1) Bin	7-1/4" (185 mm) W x 21-11/16" (551 mm) D x 24-1/4" (616 mm) H	FLFHB9	Gray	$928.00
5322KB-BCSC-6-MP	Base Organizer w/ (1) Bin	7-1/4" (185 mm) W x 21-11/16" (551 mm) D x 24-1/4" (616 mm) H	FLFHB9	Maple	$928.00
5322KB-BCSC-9-GR	Base Organizer w/ (1) Bin	10-1/4" (261 mm) W x 21-11/16" (551 mm) D x 24-1/4" (616 mm) H	FLFHB12	Gray	$986.00
5322KB-BCSC-9-MP	Base Organizer w/ (1) Bin	10-1/4" (261 mm) W x 21-11/16" (551 mm) D x 24-1/4" (616 mm) H	FLFHB12	Maple	$986.00
5322KB-BCSC-6-FOG	Base Organizer w/ (1) Bin	7-1/4" (185 mm) W x 21-11/16" (551 mm) D x 24-1/4" (616 mm) H	FLFHB9	Orion Gray	$957.00
Face Frame Contemporary Knife Block Base Cabinet Pullout w/ BLUM Soft-Close					
5322KB-BCSC-8-GR	Base Organizer w/ (1) Bin	8-3/4" (223 mm) W x 21-11/16" (551 mm) D x 24-1/4" (616 mm) H	FFFHB12	Gray	$884.50
5322KB-BCSC-8-MP	Base Organizer w/ (1) Bin	8-3/4" (223 mm) W x 21-11/16" (551 mm) D x 24-1/4" (616 mm) H	FFFHB12	Maple	$884.50
5322KB-BCSC-11-GR	Base Organizer w/ (4) Bins	11-3/4" (299 mm) W x 21-11/16" (551 mm) D x 24-1/4" (616 mm) H	FFFHB15	Gray	$957.00
5322KB-BCSC-11-MP	Base Organizer w/ (4) Bins	11-3/4" (299 mm) W x 21-11/16" (551 mm) D x 24-1/4" (616 mm) H	FFFHB15	Maple	$957.00
Full Access Contemporary Base Cabinet Pullout w/ (3) Utensil Bins and BLUM Soft-Close					
5322UT-BCSC-6-GR	Base Organizer	7-1/4" (185 mm) W x 21-11/16" (551 mm) D x 24-1/4" (616 mm) H	FLFHB9	Gray	$635.80
5322UT-BCSC-6-MP	Base Organizer	7-1/4" (185 mm) W x 21-11/16" (551 mm) D x 24-1/4" (616 mm) H	FLFHB9	Maple	$638.00
5322UT-BCSC-6-FOG	Base Organizer	7-1/4" (185 mm) W x 21-11/16" (551 mm) D x 24-1/4" (616 mm) H	FLFHB9	Orion Gray	$661.20
Face Frame Contemporary Base Cabinet Pullout w/ (3) Utensil Bins and BLUM Soft-Close					
5322UT-BCSC-8-GR	Base Organizer	8-3/4" (223 mm) W x 21-11/16" (551 mm) D x 24-1/4" (616 mm) H	FFFHB12	Gray	$667.00
5322UT-BCSC-8-MP	Base Organizer	8-3/4" (223 mm) W x 21-11/16" (551 mm) D x 24-1/4" (616 mm) H	FFFHB12	Maple	$667.00

5375 Series

Wine Base Cabinet Organizer

Soft Close

- Designed for a 15" minimum cabinet opening
- Chrome-plated round wire
- Gas spring assist soft-open/ soft-close
- Holds (20) wine bottles, 150 lb. capacity
- Universal for left or right handed cabinets

5375-40WR-1CR

5375-40WR-1CR
Wine Base Cabinet Pullout

Designed in cooperation with SIGE

Wine Base Organizer w/ Soft-Close

PRODUCT	DESCRIPTION	DIMS	MCO	CAB	FINISH	SLP
5375-40WR-1CR	Wine Base Organizer	14-1/8" (359 mm) W x 17" (432 mm) D x 25-3/4" (655 mm) H	15" (381 mm) - FF 15" (381 mm) - FL	FHB18	Chrome	$768.50

Chrome Base Pullout

548 Series

- Designed for use in both 12″ full height or drawer/door cabinet applications
- (2) adjustable polymer shelves with chrome accents
- Ball-bearing, patented tri-slide system
- Patented door-mounting system
  (US Patent No: 7,204,569)

Chrome Base Pullout w/ (3) Polymer Shelves

PRODUCT	DESCRIPTION	DIMS	MCO	CAB	FINISH	SLP
548-BC-8C	Chrome Base Pullout	7-7/8″ (201 mm) W x 22-1/2″ (572 mm) D x 19-5/16″ (491 mm) H	7-29/32″ (201 mm)	B12	Chrome	$245.05

5730 Series

Premier Pullout Shelf

5730-21CR

- Designed for 15″, 18″, 24″ and 36″ base cabinets
- Chrome-plated round wire
- Full-extension, under mount slides w/ soft-close
- Adjustable mounting brackets
- Door-mount brackets included

Minimum Cabinet Opening

PRODUCT #	MCO FF	MCO FL
5730-12CR	11-1/2″ (292 mm)	11-1/2″ (292 mm)
5730-15CR	14-1/2″ (368 mm)	14-1/2″ (368 mm)
5730-21CR	20-1/2″ (521 mm)	20-1/2″ (521 mm)
5730-33CR	32-1/2″ (826 mm)	32-1/2″ (826 mm)

MOUNTING BRACKET OPTIONS

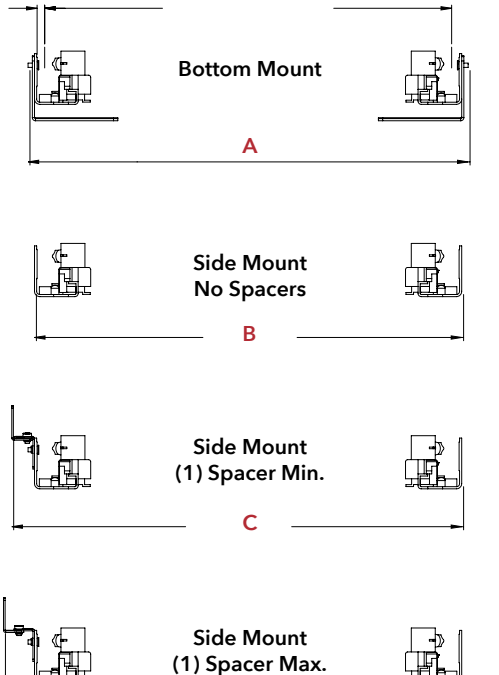

Create a customized space for pots, pans and lids with the Drop-In Cookware Organizer, compatible with 21" and 33" pullout shelves

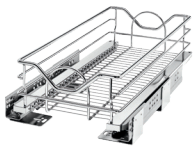

5730-12CR
Pullout Wire Shelf
(12" version shown)

5730-15CR
Pullout Wire Shelf
(15" version shown)

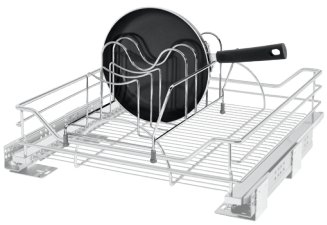

5730-21CR
Pullout Wire Shelf
(21" version shown)

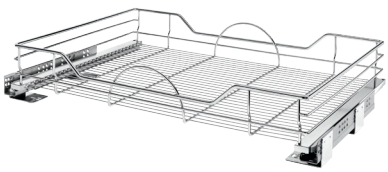

5730-33CR
Pullout Wire Shelf
(33" version shown)

PART	A	B	C	D	E	F
5730-12CR	11-15/16" (303 mm)	11-1/2" (292 mm)	12-5/16" (313 mm)	12-11/16" (322 mm)	13-1/8" (333 mm)	13-7/8" (352 mm)
5730-15CR	14-15/16" (379 mm)	14-1/2" (368 mm)	15-5/16" (389 mm)	15-11/16" (399 mm)	16-1/8" (410 mm)	16-7/8" (429 mm)
5730-21CR	20-15/16" (532 mm)	20-1/2" (521 mm)	21-5/16" (541 mm)	21-11/16" (551 mm)	22-1/8" (562 mm)	22-7/8" (581 mm)
5730-33CR	32-15/16" (837 mm)	32-1/2" (826 mm)	33-5/16" (846 mm)	33-11/16" (856 mm)	34-1/8" (867 mm)	34-7/8" (886 mm)

Pullout Wire Shelf w/ Soft-Close slides

PRODUCT	DESCRIPTION	DIMS	CAB	FINISH	SLP
5730-12CR	Pullout Wire Shelf	11-1/2 (293 mm) W x 21-3/4" (553 mm) D x 5-5/16 - 5-19/32" (135 - 143 mm) H	B15	Chrome	$288.55
5730-15CR	Pullout Wire Shelf	14-1/2(369 mm) W x 21-3/4" (553 mm) D x 5-5/16 - 5-19/32" (135 - 143 mm) H	B18	Chrome	$305.95
5730-21CR	Pullout Wire Shelf	20-1/2 - 22-11/16" (521 - 577 mm) W x 21-3/4" (553 mm) D x 5-5/16 - 5-19/32" (135 - 143 mm) H	B24	Chrome	$334.95
5730-33CR	Pullout Wire Shelf	32-1/2 - 34-23/32" (826 - 882 mm) W x 21-3/4" (553 mm) D x 5-5/16 - 5-19/32" (135 - 143 mm) H	B36	Chrome	$348.00
Accessories					
5789CR	Drop-In Cookware Organizer	14-1/16" (358 mm) W x 9-1/2" (242 mm) D x 7-11/16" (196 mm) H		Chrome	$50.75

5330 Series

Solid Bottom Pullout Shelf

5330-33BCSC-MP

blum

- Designed for 15", 18", 24" and 36" base cabinets
- Solid bottom shelves with chrome-plated wire, gray or natural maple, or orion gray flat wire with satin solid bottom
- Full-extension, undermount slides w/ BLUM soft-close
- Side and bottom mounting brackets
- Door-mounting brackets included
- TSCA Title VI compliant

Designed in cooperation with SIGE

Scan for video

Minimum Cabinet Opening

PRODUCT #	MCO FF	MCO FL
5330-12BCSC-**	11-1/2" (292 mm)	11-1/2" (292 mm)
5330-15BCSC-**	14-1/2" (368 mm)	14-1/2" (368 mm)
5330-21BCSC-**	20-1/2" (521 mm)	20-1/2" (521 mm)
5330-33BCSC-**	32-1/2" (826 mm)	32-1/2" (826 mm)
5330-33BCSCFL-FOG	32-1/2" (826 mm)	32-1/2" (826 mm)

MOUNTING BRACKET OPTIONS

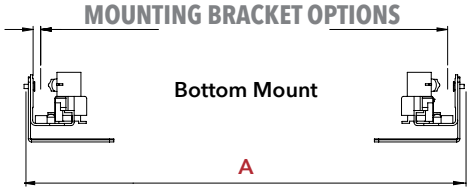

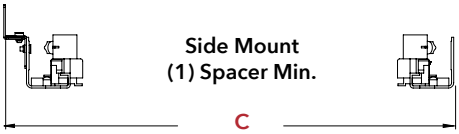

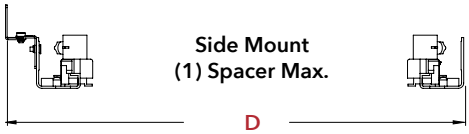

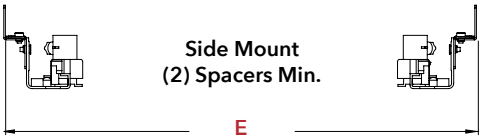

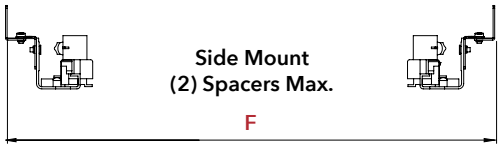

Solid bottom shelves in maple or gray, with chrome accents or orion gray with flat wire

5330-12BCSC-GR
Solid Bottom Shelf
(12" version shown)

5330-15BCSC-MP
Solid Bottom Shelf
(15" version shown)

5330-21BCSC-MP
Solid Bottom Shelf
(21" version shown)

5330-33BCSCFL-FOG
Solid Bottom Shelf
(33" version shown)

PART	A	B	C	D	E	F
5330-12BCSC-**	12-1/8" (308 mm)	11-11/16" (300 mm)	12-1/2" (318 mm)	12-7/8" (327 mm)	13-5/16" (338 mm)	14-1/16" (357 mm)
5330-15BCSC-**	15-1/8" (384 mm)	14-11/16" (373 mm)	15-1/2" (394 mm)	15-7/8" (403 mm)	16-5/16" (414 mm)	17-1/16" (433 mm)
5330-21BCSC-**	21-1/8" (537 mm)	20-11/16" (526 mm)	21-1/2" (546 mm)	21-7/8" (556 mm)	22-5/16" (567 mm)	23-1/16" (586 mm)
5330-33BCSC-**	33-1/8" (841 mm)	32-11/16" (830 mm)	33-1/2" (851 mm)	33-7/8" (860 mm)	34-5/16" (872 mm)	35-1/16" (891 mm)
5330-33BCSCFL-FOG	33-1/8" (841 mm)	32-11/16" (830 mm)	33-1/2" (851 mm)	33-7/8" (860 mm)	34-5/16" (872 mm)	35-1/16" (891 mm)

NOTE: ** Insert "MP" for Maple Shelf or "GR" for Gray Shelf

Face Frame Solid Bottom Pullout Shelf w/ BLUM Soft-Close

PRODUCT	DESCRIPTION	DIMS	MCO	CAB	FINISH	SLP
5330-12BCSC-**	Solid Bottom Shelf	11-11/16" (297 mm) W x 21-17/32" (547 mm) D x 5-1/16" (129 mm) H	11-11/16" (300 mm)	FFB15	Chrome	$478.50
5330-15BCSC-**	Solid Bottom Shelf	14-11/16" (373 mm) W x 21-17/32" (547 mm) D x 5-1/16" (129 mm) H	14-11/16" (373 mm)	FFB18	Chrome	$500.25
5330-21BCSC-**	Solid Bottom Shelf	20-11/16" (526 mm) W x 21-17/32" (547 mm) D x 5-1/16" (129 mm) H	20-11/16" (526 mm)	FFB24	Chrome	$522.00
5330-33BCSC-**	Solid Bottom Shelf	32-11/16" (831 mm) W x 21-17/32" (547 mm) D x 5-1/16" (129 mm) H	32-11/16" (830 mm)	FFB36	Chrome	$566.95
Full Access Solid Bottom Pullout Shelf w/ BLUM Soft-Close						
5330-33BCSCFL-FOG	Solid Bottom Shelf	32-11/16" (831 mm) W x 21-17/32" (547 mm) D x 5-1/16" (129 mm) H	32-1/2" (826 mm) - FF 32-11/16" (830 mm) - FL	FLB36	Orion Gray	$596.65

ML Series

Heavy-Duty Mixer Lift

ML-WNHDSCOG-18FL

Soft Close

RAS-ML Series

- Fits most cabinet sizes
- Works with your custom shelf
- Mounts to cabinet side (face frame cabinets require spacers to flush sides to opening)
- Adjustable spring tension
- Available with built-in shock dampeners
- Holds appliances up to 60 lbs.

ML Series

- Silver lift:
  - Designed for 18" full height, face frame base cabinets
  - 1-3/8" thick maple shelf
- Orion gray lift:
  - Designed for 18" full height, full access base cabinets
  - 1-3/8" thick walnut shelf
- Mounts to cabinet side
- Adjustable spring tension
- Built-in shock dampeners
- Holds appliances up to 60 lbs.
- TSCA Title VI compliant

NOTE: Mixer lift will not operate properly in a drawer/door application

Scan for video

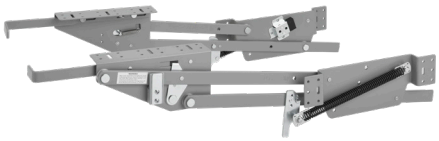

RAS-ML-HDCR
Mixer Lift
(Metallic Silver finish shown)

RAS-ML-HDSCOG
Soft-Close Mixer Lift
(Orion gray finish shown)

RECOMMENDED SPRING POSITION FOR VARYING MIXER WEIGHT

0–20 lb. = 1

20–30 lb. = 2

30–60 lb. = 3

Soft-close piston

Great for a variety of small appliances

SOFT-CLOSE MIXER LIFT KITS W/ SHELF INCLUDED

ML-MPHDSCCR-18
Soft-Close Mixer Lift Kit
(Maple/Metallic Silver finish shown)

ML-WNHDSCOG-18FL
Soft-Close Mixer Lift Kit
(Walnut/Orion Gray finish shown)

Shelf Dimensions
Maple (face frame): 11-3/4" (298 mm) W x 20" (508 mm) D x 1-3/8" (35 mm) H
Walnut (full access): 13-1/4" (336 mm) W x 20" (508 mm) D x 1-3/8" (35 mm) H
Note: *Shelves are only sold in kits with the mixer lift.*

MIXER CLEARING DIMENSIONS

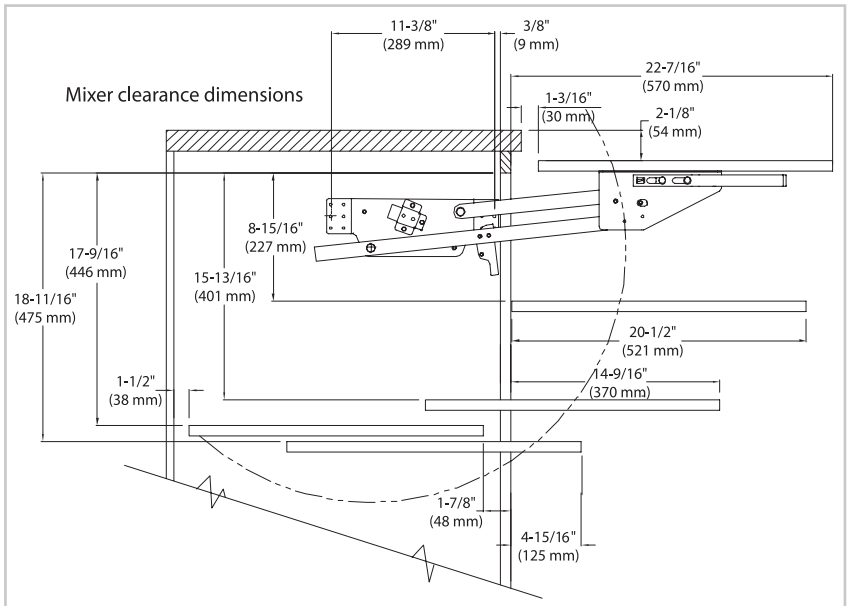

NOTE: To determine shelf size, measure the distance between mounting plates when installed minus 1-1/4" (32 mm). Recommended length of shelf is 20" (508 mm). Mounting plates are 1" (25 mm) wide. Mixer lift will not operate properly in a drawer/door application

PRODUCT	DESCRIPTION	DIMS	MCO	CAB	FINISH	SLP
Heavy Duty Mixer Lift Kit w/ Soft-Close						
ML-MPHDSCCR-18	Mixer Lift Kit	See Illustration	15" (381 mm)	FFFHB18	Metallic Silver/Maple	$538.65
ML-WNHDSCOG-18FL	Mixer Lift Kit	See Illustration	16-1/2" (419 mm)	FLFHB18	Orion Gray	$768.50
Heavy Duty Mixer Lift w/ Soft-Close - Arms Only						
RAS-ML-HDSCOG	Mixer Lift	See Illustration			Orion Gray	$377.00
RAS-ML-HDSC	Mixer Lift	See Illustration			Metallic Silver	$377.00
Heavy Duty Mixer Lift						
RAS-ML-HDCR	Mixer Lift	See Illustration			Metallic Silver	$203.70

PROP 65 WARNING FOR CALIFORNIA RESIDENTS

WARNING: These products can expose you to chemicals such as formaldehyde, lead or styrene, which are known to the State of California to cause cancer and birth defects or other reproductive harm. For more information go to www.P65Warnings.ca.gov

REV-A-SHELF®

TALL

Organizing your pantry is easier than ever with our innovative line of accessories. Whether you prefer the beautiful look of wood, the luxurious style of chrome or the more practical polymer, you are sure to find the perfect answer to your walk-in or in-cabinet pantry needs. Designed to increase functionality and enhance the look and performance of your kitchen, our ground-breaking accessories provide easy access and organization for everyday items.

Innovation through ***Organization***™

5WCOR Series

Pantry System Container Organizer

- Available in (3) widths, 18″, 24″ or 30″
- Fits 14″+ deep pantry panel systems
- Anodized chrome finish
- Full-extension ball-bearing slides
- BPA-free acrylic container set includes (1) 1.04 qt. canister, (1) 1.55 qt. canister and (1) 2.07 qt. canister
- Container sets w/ (1) small, (1) medium and (1) large bin:
  - 18″ - (2) container sets
  - 24″ - (3) container sets
  - 30″ - (4) container sets
- Installs easily in 32 mm applications
- Additional containers (sold separately)
- 9″ recommended height between organizers, but they may be spaced more closely

5WCOR-24CR-1

Scan for video

5WCOR-18CR-1
Chrome Wire Container Organizer
(18″ version shown)

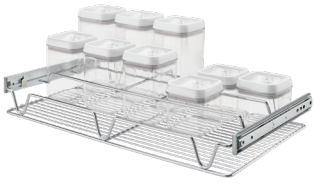

5WCOR-24CR-1
Chrome Wire Container Organizer
(24″ version shown)

5WCOR-30CR-1
Chrome Wire Container Organizer
(30″ version shown)

Pantry Container Organizer w/ Containers — w/ Full-Extension, Ball-Bearing Slides

PRODUCT	DESCRIPTION	DIMS	MCO	FINISH	SLP
5WCOR-18CR-1	Pantry Container Organizer w/ (2) Container Sets	18″ (457 mm) W x 14″ (356 mm) D x 8-11/32″ (212 mm) H	18″ (457 mm)	Chrome	$261.00
5WCOR-24CR-1	Pantry Container Organizer w/ (3) Container Sets	24″ (610 mm) W x 14″ (356 mm) D x 8-11/32″ (212 mm) H	24″ (610 mm)	Chrome	$342.20
5WCOR-30CR-1	Pantry Container Organizer w/ (4) Container Sets	30″ (762 mm) W x 14″ (356 mm) D x 8-11/32″ (212 mm) H	30″ (762 mm)	Chrome	$420.50
Containers					
CO-03S-1	Small Container	3-15/16″ (100 mm) W x 3-15/16″ (100 mm) D x 3-27/32″ (98 mm) H			$26.10
CO-05M-1	Medium Container	3-15/16″ (100 mm) W x 3-15/16″ (100 mm) D x 5-25/32″ (147 mm) H			$29.00
CO-07L-1	Large Container	3-15/16″ (100 mm) W x 3-15/16″ (100 mm) D x 7-23/32″ (196 mm) H			$31.90
CO-SET-1	Small, Medium, Large Container Set	3-15/16″ (100 mm) W x 3-15/16″ (100 mm) D x 7-23/32″ (196 mm) H			$87.00

Wine/Bottle Rack

5WBR Series

- Available in (3) widths, 18", 24" or 30"
- Fits 14"+ deep cabinetry
- Polished chrome finish
- Rack holds items right-reading, angled to face you
- Holds up to (7) wine bottles, 18" (4), 24" (6), and 30" (7)
- Installs easily in 32 mm applications
- Full-extension ball-bearing slides

Chrome Wine/Bottle Rack Pullout

PRODUCT	DESCRIPTION	DIMS	MCO	FINISH	SLP
5WBR-18CR-1	18" Wine/Bottle Rack	18" (457 mm) W x 14" (355 mm) D x 2-13/16" (71 mm) H	18" (457 mm)	Chrome	$92.80
5WBR-24CR-1	24" Wine/Bottle Rack	24" (610 mm) W x 14" (355 mm) D x 2-13/16" (71 mm) H	24" (610 mm)	Chrome	$104.40
5WBR-30CR-1	30" Wine/Bottle Rack	30" (762 mm) W x 14" (355 mm) D x 2-13/16" (71 mm) H	30" (762 mm)	Chrome	$124.70
(5) Chrome Wine/Bottle Rack Pullouts (Bulk)					
5WBR-18CR-5	18" Wine/Bottle Rack	18" (457 mm) W x 14" (355 mm) D x 2-13/16" (71 mm) H		Chrome	$81.20 ea.
5WBR-24CR-5	24" Wine/Bottle Rack	24" (610 mm) W x 14" (355 mm) D x 2-13/16" (71 mm) H		Chrome	$94.25 ea.
5WBR-30CR-5	30" Wine/Bottle Rack	30" (762 mm) W x 14" (355 mm) D x 2-13/16" (71 mm) H		Chrome	$108.75 ea.

Spice/Can Rack

5WSCR Series

- Available in (3) widths, 18", 24" or 30"
- Fits 14"+ deep cabinetry
- Polished chrome finish
- Rack holds items right-reading, angled to face the chef
- Spice/Can holds up to (26) spices or (12) cans, 18" (8), 24" (10) and 30" (12)
- Installs easily in 32 mm applications
- Full-extension ball-bearing slides

Chrome Spice/Can Rack Pullout

PRODUCT	DESCRIPTION	DIMS	MCO	FINISH	SLP
5WSCR-18CR-1	18" Spice/Can Rack	18" (457 mm) W x 14" (355 mm) D x 2-13/16" (71 mm) H	18" (457 mm)	Chrome	$91.35
5WSCR-24CR-1	24" Spice/Can Rack	24" (610 mm) W x 14" (355 mm) D x 2-13/16" (71 mm) H	24" (610 mm)	Chrome	$111.65
5WSCR-30CR-1	30" Spice/Can Rack	30" (762 mm) W x 14" (355 mm) D x 2-13/16" (71 mm) H	30" (762 mm)	Chrome	$129.05
(5) Chrome Spice/Can Rack Pullouts (Bulk)					
5WSCR-18CR-5	18" Spice/Can Rack	18" (457 mm) W x 14" (355 mm) D x 2-13/16" (71 mm) H		Chrome	$79.75 ea.
5WSCR-24CR-5	24" Spice/Can Rack	24" (610 mm) W x 14" (355 mm) D x 2-13/16" (71 mm) H		Chrome	$102.95 ea.
5WSCR-30CR-5	30" Spice/Can Rack	30" (762 mm) W x 14" (355 mm) D x 2-13/16" (71 mm) H		Chrome	$120.35 ea.

4PIL Series

Wood Pilaster System

4PIL27-24SC-3

NEW DESIGN!

blum

- Available in (3) rail heights:
  - 19-5/8″
  - 27-3/16″
  - 54-13/32″

  (3) rail widths:
  - 7/8″
  - 1-1/8″
  - 2-3/8″
- Slide bracket adds 1/4″ width to each side (1/2″ overall)
- All rails can be trimmed to a minimum width of 7/8″
- Drawer boxes are easy to adjust with no tools required
- No visible system holes
- Slide brackets install easily with (4) screws per drawer box
- Drawer boxese included with Pilaster System Kits only
- Kits can be stacked for tall pantry application
- TSCA Title VI compliant

Wooden template for easy installation

Slide brackets install easily with (4) screws per drawer box

Brackets rest on hidden dowels allowing for effortless adjustment while maintaining stability (Adds 1/4″ width per side)

NOTE: See page 128 to see the Pilaster System in a base application.

4PIL27-24SC-3
Pilaster System Kit
((2) Standard, (1) tall shown)

4PIL-20-113-*
Pilaster Kit (Upright Only)

4WDB7-PIL-24SC-1
Tall Drawer w/ Dividers
(24" version shown)

PRODUCT	DESCRIPTION	DIMS	CAB	FINISH	SLP
Pilaster System Kits w/ BLUM Soft-Close - Slides, Uprights and Drawers					
4PIL20-18SC-2*	(1) Standard, (1) Tall w/ Dividers	16-1/2" (420 mm) W x 21-17/32" (548 mm) D x 19-5/8 - 21-9/32" (499 - 541 mm) H	B18	Maple	$537.25
4PIL20-24SC-2	(1) Standard, (1) Tall w/ Dividers	22-1/2" (572 mm) W x 21-17/32" (548 mm) D x 19-5/8 - 21-9/32" (499 - 541 mm) H	B24	Maple	$577.80
4PIL27-18SC-3	(2) Standard, (1) Tall w/ Dividers	16-1/2" (420 mm) W x 21-17/32" (548 mm) D x 27-3/16 - 28-13/16" (691 - 732 mm) H	FHB18	Maple	$640.75
4PIL27-24SC-3	(2) Standard, (1) Tall w/ Dividers	22-1/2" (572 mm) W x 21-17/32" (548 mm) D x 27-3/16 - 28-27/32" (691 - 733 mm) H	FHB24	Maple	$699.20
Pilaster Kits - Uprights Only					
4PIL-20-088-1	Pilaster Upright Kit	7/8" (23 mm) W x 3/4" (20 mm) D x 19-5/8" (499 mm) H		Maple	$97.15
4PIL-20-088-10	(10) Pilaster Upright Kits			Maple	$92.35 ea.
4PIL-20-113-1	Pilaster Upright Kit	1-1/8" (29 mm) W x 3/4" (20 mm) D x 19-5/8" (499 mm) H		Maple	$106.00
4PIL-20-113-10	(10) Pilaster Upright Kits			Maple	$100.75 ea.
4PIL-20-238-1	Pilaster Upright Kit	2-3/8" (61 mm) W x 3/4" (20 mm) D x 19-5/8" (499 mm) H		Maple	$131.20
4PIL-20-238-10	(10) Pilaster Upright Kits			Maple	$124.70 ea.
4PIL-27-088-1	Pilaster Upright Kit	7/8" (23 mm) W x 3/4" (20 mm) D x 27-3/16" (691 mm) H		Maple	$114.70
4PIL-27-088-10	(10) Pilaster Upright Kits			Maple	$108.90 ea.
4PIL-27-113-1	Pilaster Upright Kit	1-1/8" (29 mm) W x 3/4" (20 mm) D x 27-3/16" (691 mm) H		Maple	$125.00
4PIL-27-113-10	(10) Pilaster Upright Kits			Maple	$118.75 ea.
4PIL-27-238-1	Pilaster Upright Kit	2-3/8" (61 mm) W x 3/4" (20 mm) D x 27-3/16" (691 mm) H		Maple	$165.60
4PIL-27-238-10	(10) Pilaster Upright Kits			Maple	$157.30 ea.
4PIL-54-088-1	Pilaster Upright Kit	7/8" (23 mm) W x 3/4" (20 mm) D x 54-13/32" (1382 mm) H		Maple	$ 200.80
4PIL-54-088-10	(10) Pilaster Upright Kits			Maple	$190.80 ea.
4PIL-54-113-1	Pilaster Upright Kit	1-1/8" (29 mm) W x 3/4" (20 mm) D x 54-13/32" (1382 mm) H		Maple	$231.70
4PIL-54-113-10	(10) Pilaster Upright Kits			Maple	$220.10 ea.
4PIL-54-238-1	Pilaster Upright Kit	2-3/8" (61 mm) W x 3/4" (20 mm) D x 54-13/32" (1382 mm) H		Maple	$295.50
4PIL-54-238-10	(10) Pilaster Upright Kits			Maple	$280.70 ea.
Pilaster Slide Brackets					
4PIL-HDW-1	Pilaster upright hardware kit for slide attach (1 set of 4 brackets)			Silver	$11.60
4PIL-HDW-10	Pilaster upright hardware kit for slide attach (10 sets of 4 brackets)			Silver	$10.90 ea.
Utensil Pullout w/ BLUM Soft-Close					
4PUT-18SC-1	Utensil Pullout w/ (3) Bins	14-1/16" (358 mm) W x 21-21/32" (550 mm) D x 3-27/32" (98 mm) H	B18	Maple	$303.05
4PUT-24SC-1	Utensil Pullout w/ (5) Bins	20-1/16" (510 mm) W x 21-21/32" (550 mm) D x 3-27/32" (98 mm) H	B24	Maple	$395.85
Drawer Box w/ BLUM Soft-Close					
4WDB4-PIL-18SC-1	(1) Standard drawer	13-11/32" (339 mm) W x 21" (534 mm) D x 4" (102 mm) H (drawers only)	B18	Maple	$288.55
4WDB7-PIL-18SC-1	(1) Tall drawer w/ dividers	13-11/32" (339 mm) W x 21" (534 mm) D x 7" (178 mm) H (drawers only)	B18	Maple	$334.20
4WDB4-PIL-24SC-1	(1) Standard drawer for 24"	19-11/32" (492 mm) W x 21" (534 mm) D x 4" (102 mm) H (drawers only)	B24	Maple	$305.95
4WDB7-PIL-24SC-1	(1) Tall drawer w/ dividers	19-11/32" (492 mm) W x 21" (534 mm) D x 7" (178 mm) H (drawers only)	B24	Maple	$450.95

448-TPF Series

Wood Pantry Pullout

448-TP43-11-1

- Designed for tall cabinet applications
- Available in (3) heights 43″, 51″ and 58″ and (4) widths 5″, 8″, 11″ and 14″
- Shipped ready to assemble
- Patented door mount brackets with 5″ of adjustability and a micro-trim adjuster (US Patent No. 8,388,076)
- Natural maple construction with semi-gloss finish
- Rub bushings included for 1-1/2″, 1-5/8″, 1-3/4″ face frames
- TSCA Title VI compliant
- Fulterer EZ-close slide features 265 lb. recommended use with pantry

Top glide for increased stability

Heavy-duty bottom slide

For inset applications or for those who prefer to keep their cabinets flawless, we recommend our IDRB bushing. The discreet design prevents side-to-side movement and fits behind the frame, eliminating the need for surface drilling giving you a seamless look and unparalleled stability.

448-TPF43-5-1
Pullout Pantry
(5" version shown)

448-TPF51-8-1
Pullout Pantry
(8" version shown)

448-TPF58-11-1
Pullout Pantry
(11" version shown)

448-TPF58-14-1
Pullout Pantry
(14" version shown)

PRODUCT	DESCRIPTION	DIMS	MCO	CAB	FINISH	SLP
5" Wood Pantry Pullout w/ Soft-Close						
448-TPF43-5-1	Wood Pantry Pullout	5" (127 mm) W x 23-21/32" (602 mm) D x 43-21/32 - 52-21/32" (1109 - 1338 mm) H	5-1/2" (140 mm)	T9	Maple	$913.50
448-TPF51-5-1	Wood Pantry Pullout	5" (127 mm) W x 23-21/32" (602 mm) D x 51-21/32 - 60-21/32" (1312 - 1541 mm) H	5-1/2" (140 mm)	T9	Maple	$942.50
448-TPF58-5-1	Wood Pantry Pullout	5" (127 mm) W x 23-21/32" (602 mm) D x 58-21/32 - 67-21/32" (1490 - 1719 mm) H	5-1/2" (140 mm)	T9	Maple	$986.00
8" Wood Pantry Pullout w/ Soft-Close						
448-TPF43-8-1	Wood Pantry Pullout	8" (204 mm) W x 23-21/32" (602 mm) D x 43-21/32 - 52-21/32" (1109 - 1338 mm) H	8-1/2" (216 mm)	T12	Maple	$942.50
448-TPF51-8-1	Wood Pantry Pullout	8" (204 mm) W x 23-21/32" (602 mm) D x 51-21/32 - 60-21/32" (1312 - 1541 mm) H	8-1/2" (216 mm)	T12	Maple	$971.50
448-TPF58-8-1	Wood Pantry Pullout	8" (204 mm) W x 23-21/32" (602 mm) D x 58-21/32 - 67-21/32" (1490 - 1719 mm) H	8-1/2" (216 mm)	T12	Maple	$1,058.50
11" Wood Pantry Pullout w/ Soft-Close						
448-TPF43-11-1	Wood Pantry Pullout	11" (280 mm) W x 23-21/32" (602 mm) D x 43-21/32 - 52-21/32" (1109 - 1338 mm) H	11-1/2" (292 mm)	T15	Maple	$1,029.50
448-TPF51-11-1	Wood Pantry Pullout	11" (280 mm) W x 23-21/32" (602 mm) D x 51-21/32 - 60-21/32" (1312 - 1541 mm) H	11-1/2" (292 mm)	T15	Maple	$1,116.50
448-TPF58-11-1	Wood Pantry Pullout	11" (280 mm) W x 23-21/32" (602 mm) D x 58-21/32 - 67-21/32" (1490 - 1719 mm) H	11-1/2" (292 mm)	T15	Maple	$1,145.50
14" Wood Pantry Pullout w/ Soft-Close						
448-TPF43-14-1	Wood Pantry Pullout	14" (356 mm) W x 23-21/32" (602 mm) D x 43-21/32 - 52-21/32" (1109 - 1338 mm) H	14-1/2" (368 mm)	T18	Maple	$1,116.50
448-TPF51-14-1	Wood Pantry Pullout	14" (356 mm) W x 23-21/32" (602 mm) D x 51-21/32 - 60-21/32" (1312 - 1541 mm) H	14-1/2" (368 mm)	T18	Maple	$1,203.50
448-TPF58-14-1	Wood Pantry Pullout	14" (356 mm) W x 23-21/32" (602 mm) D x 58-21/32 - 67-21/32" (1490 - 1719 mm) H	14-1/2" (368 mm)	T18	Maple	$1,277.45
Accessories						
IDRB-1	Adjustable Rub Bushing for Inset Application				Metal	$11.60

432 Series

Wood Tall Filler Pullout

- Available for 6" applications in 39" and 45" heights
- Use alone or in conjunction with others to reach 84", 90" or 96" heights
- Adjustable shelves:
  - (5) for the 39" model
  - (6) for the 45" model
- Full-extension, ball-bearing slides
- Features three-slide design that provides the most stable function on the market
- TSCA Title VI compliant

432-TF39-6C
Wood Tall Filler Pullout
(39" version shown)

432-TF45-6C
Wood Tall Filler Pullout
(45" version shown)

432-TF45-6C

Included mending plates securely fastens both frames together

Wood Tall Filler Pullout

PRODUCT	DESCRIPTION	DIMS	FINISH	SLP
432-TF39-6C	39" Tall Filler Organizer	6" (153 mm) W x 23" (585 mm) D x 38-1/2" (978 mm) H	Maple	$464.00
432-TF45-6C	45" Tall Filler Organizer	6" (153 mm) W x 23" (585 mm) D x 44-1/2" (1131 mm) H	Maple	$493.00

Wood Swing Out Pantry

4W Series

- Designed for 36" pantry cabinets
- Adjustable interior door and pantry shelves
- Adjustable mounting brackets with 5" of adjustability (US Patent No: 7,204,569)
- Removable chrome accents
- Maple construction with semi-gloss finish
- Swings out on an industrial piano hinge
- Complete kit: (2) swing out units and (2) door storage units
- Center divider not included
- TSCA Title VI compliant

4WP18-45-KIT
Wood Swing Out Pantry
(45" version shown)

4WP18-51-KIT
Wood Swing Out Pantry
(51" version shown)

4WP18-57-KIT
Wood Swing Out Pantry
(57" version shown)
Top rails not included

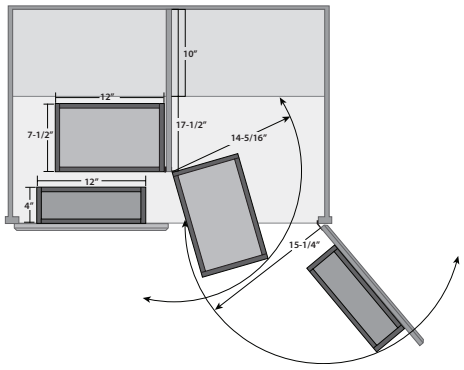

Wood Swing Out Pantry

PRODUCT	DESCRIPTION	DIMS	MCO	CAB	FINISH	SLP
4WP18-45-KIT	45" Swing Out Pantry Kit - Includes (2) 4WDP18-45 and (2) 4WSP18-45		33" (838 mm)	T36	Maple	$1,145.50
4WP18-51-KIT	51" Swing Out Pantry Kit - Includes (2) 4WSP18-51 and (2) 4WDP18-51		33" (838 mm)	T36	Maple	$1,203.50
4WP18-57-KIT	57" Swing Out Pantry Kit - Includes (2) 4WDP18-57 and (2) 4WSP18-57		33" (838 mm)	T36	Maple	$1,232.50
Components						
4WSP18-45	45" Swing Out Pantry (w/Hardware)	12" (305 mm) W x 7-1/2" (191 mm) D x 45" (1143 mm) H	33" (838 mm)	T36	Maple	$343.65
4WDP18-45	45" Pantry Door Unit (w/Hardware)	12" (305 mm) W x 4" (102 mm) D x 45" (1143 mm) H	15-1/4" (387 mm)	T36	Maple	$245.05
4WSP18-51	51" Swing Out Pantry (w/Hardware)	12" (305 mm) W x 7-1/2" (191 mm) D x 51-1/4" (1302 mm) H	33" (838 mm)	T36	Maple	$361.05
4WDP18-51	51" Pantry Door Unit (w/Hardware)	12" (305 mm) W x 4" (102 mm) D x 51-1/4" (1302 mm) H	15-1/4" (387 mm)	T36	Maple	$256.65
4WSP18-57*	57" Swing Out Pantry (w/Hardware)	12" (305 mm) W x 7-1/2" (191 mm) D x 57" (1448 mm) H	33" (838 mm)	T36	Maple	$493.10
4WDP18-57*	57" Pantry Door Unit (w/Hardware)	12" (305 mm) W x 4" (102 mm) D x 57" (1448 mm) H	15-1/4" (387 mm)	T36	Maple	$364.95

5374 Series

Flat Wire Swing Out Pantry

- Designed for full access 18" and 24" width pantry cabinets
- Overall height 74"
- (2) door mounting brackets
- (5) easy-to-adjust shelves
- Solid bottom shelves with textured linen finish
- Swing out hardware allows complete access to pantry
- Orion gray finish and flat wire construction
- TSCA Title VI compliant

5374-24FL-FOG

Scan for video

Designed in cooperation with EIGE

5374-18FL-OG
Swing Out Pantry
(18" version shown)

PRODUCT #	MCO FF	MCO FL
5374-18FL-FOG	14-1/4" (362 mm)	16-1/2" (419 mm)
5374-24FL-FOG	22-1/4" (565 mm)	22-1/2" (572 mm)

Full Access Flat Wire Swing Out Pantry

PRODUCT	DESCRIPTION	DIMS	MCO	CAB	FINISH	SLP
5374-18FL-FOG	Pantry for 18"	14-3/16" (361 mm) W x 18-1/2" (470 mm) D x 74-1/16" (1882 mm) H	16-1/2" (419 mm)	FLT18	Orion Gray	$1,450.00
5374-24FL-FOG	Pantry for 24"	22-1/16" (561 mm) W x 18-1/2" (470 mm) D x 74-1/16" (1882 mm) H	22-1/2" (571 mm)	FLT24	Orion Gray	$1,493.50

Solid Bottom Pantry Pullout

5200 Series

5273-14-MP

- Available in (2) heights and (2) widths
- Solid bottom shelves with chrome-plated round wire and Stylinox™ anti-skid, natural maple
- Full-extension slides w/ soft-close
- Built-in door mount brackets
- TSCA Title VI compliant

COMPAGNUCCI® QUALITY MADE IN ITALY

Pantry Pullout w/ Soft-Close — (5) Shelves (3) Door Mount Brackets

PRODUCT	DESCRIPTION		MCO	CAB	FINISH	SLP
5258-09-MP	Pantry Pullout	8-5/8" (220 mm) W x 20" (508 mm) D x 59-1/2 - 66-7/8" (1512 - 1699 mm) H	9" (229 mm)	T12	Maple	$1,667.50
5258-14-MP	Pantry Pullout	14-1/2" (369 mm) W x 20" (508 mm) D x 59-1/2 - 66-7/8" (1512 - 1699 mm) H	15" (381 mm)	T18	Maple	$1,725.50

Pantry Pullout w/ Soft-Close — (6) Shelves (4) Door Mount Brackets

5273-09-MP	Pantry Pullout	8-5/8" (220 mm) W x 20" (508 mm) D x 74-7/8 - 81-7/8" (1902 - 2080 mm) H	9" (229 mm)	T12	Maple	$1,870.50
5273-14-MP	Pantry Pullout	14-1/2" (369 mm) W x 20" (508 mm) D x 74-7/8 - 81-7/8" (1902 - 2080 mm) H	15" (381 mm)	T18	Maple	$2,017.70

5300 Series

Solid Bottom Pantry Pullout

Soft Close

- Available in (5) widths and (4) height ranges for full access 24" deep cabinetry
- Natural maple or gray solid bottom shelves
- Full-extension slides w/ soft-close
- Micro-adjustment door mounting brackets
- Kit packaged with frame, baskets and hardware
- TSCA Title VI compliant

5373-13-MP

BASKET WIDTH
8" (203 mm)
10" (254 mm)
13" (330 mm)
16" (406 mm)
19" (482 mm)

Adjustable door-mount bracket

Solid bottom shelves available in maple or gray

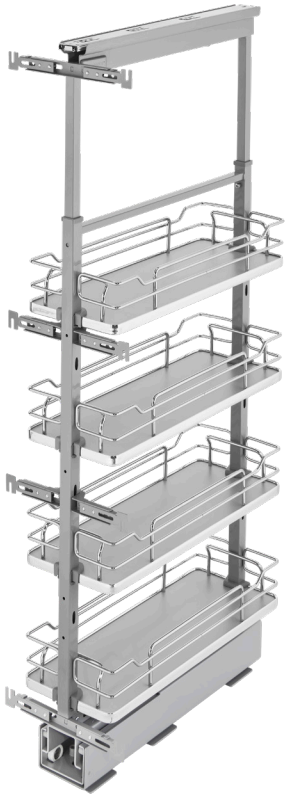

5343-08-GR
Pullout Pantry
(8" gray version shown)

With the adjustable shelf extender bracket, you can move the top shelf on our 5300 Series pantries with ease. The slide-on design installs effortlessly when affixing to the fully-extended frame, letting you rearrange your shelves; maximize your storage space.

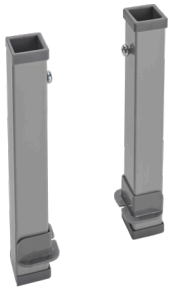

NOTE: ** Insert "MP" for Maple Shelf or "GR" for Gray Shelf

Solid Bottom Pantry Pullout w/ Soft-Close — (4) Shelves/ (2) Door-Mount Brackets

PRODUCT	DESCRIPTION	DIMS	MCO	CAB	SLP
5343-08-**	Pantry Pullout	8-1/4" (210 mm) W x 21-11/16" (550 mm) D x 43-13/32" – 50-3/4" (1102 mm - 1289 mm) H	8-1/2" (216 mm)	T12	$1,334.00
5343-10-**	Pantry Pullout	10-1/4" (260 mm) W x 21-11/16" (550 mm) D x 43-13/32" – 50-3/4" (1102 mm - 1289 mm) H	10-1/2" (267 mm)	FLT12	$1,392.00
5343-13-**	Pantry Pullout	13-1/4" (337 mm) W x 21-11/16" (550 mm) D x 43-13/32" – 50-3/4" (1102 mm - 1289 mm) H	13-1/2" (343 mm)	FLT15	$1,399.25
5343-16-**	Pantry Pullout	16-1/4" (413 mm) W x 21-11/16" (550 mm) D x 43-13/32" – 50-3/4" (1102 mm - 1289 mm) H	16-1/2" (419 mm)	FLT18	$1,493.40
5343-19-**	Pantry Pullout	19-1/4" (489 mm) W x 21-11/16" (550 mm) D x 43-13/32" – 50-3/4" (1102 mm - 1289 mm) H	19-1/2" (495 mm)	FLT21	$1,522.50
5350-08-**	Pantry Pullout	8-1/4" (210 mm) W x 21-11/16" (550 mm) D x 50-3/4" – 58-9/32" (1289 mm - 1480 mm) H	8-1/2" (216 mm)	T12	$1,319.50
5350-10-**	Pantry Pullout	10-1/4" (260 mm) W x 21-11/16" (550 mm) D x 50-3/4" – 58-9/32" (1289 mm - 1480 mm) H	10-1/2" (267 mm)	FLT12	$1,348.50
5350-13-**	Pantry Pullout	13-1/4" (337 mm) W x 21-11/16" (550 mm) D x 50-3/4" – 58-9/32" (1289 mm - 1480 mm) H	13-1/2" (343 mm)	FLT15	$1,363.00
5350-16-**	Pantry Pullout	16-1/4" (413 mm) W x 21-11/16" (550 mm) D x 50-3/4" – 58-9/32" (1289 mm - 1480 mm) H	16-1/2" (419 mm)	FLT18	$1,464.50
5350-19-**	Pantry Pullout	19-1/4" (489 mm) W x 21-11/16" (550 mm) D x 50-3/4" – 58-9/32" (1289 mm - 1480 mm) H	19-1/2" (495 mm)	FLT21	$1,479.00
Solid Bottom Pantry Pullout w/ Soft-Close — (5) Shelves/ (3) Door-Mount Brackets					
5358-08-**	Pantry Pullout	8-1/4" (210 mm) W x 21-11/16" (550 mm) D x 58-1/4" – 65-3/4" (1479 mm - 1670 mm) H	8-1/2" (216 mm)	T12	$1,464.50
5358-10-**	Pantry Pullout	10-1/4" (260 mm) W x 21-11/16" (550 mm) D x 58-1/4" – 65-3/4" (1479 mm - 1670 mm) H	10-1/2" (267 mm)	FLT12	$1,508.00
5358-13-**	Pantry Pullout	13-1/4" (337 mm) W x 21-11/16" (550 mm) D x 58-1/4" – 65-3/4" (1479 mm - 1670 mm) H	13-1/2" (343 mm)	FLT15	$1,522.55
5358-16-**	Pantry Pullout	16-1/4" (413 mm) W x 21-11/16" (550 mm) D x 58-1/4" – 65-3/4" (1479 mm - 1670 mm) H	16-1/2" (419 mm)	FLT18	$1,667.50
5358-19-**	Pantry Pullout	19-1/4" (489 mm) W x 21-11/16" (550 mm) D x 58-1/4" – 65-3/4" (1479 mm - 1670 mm) H	19-1/2" (495 mm)	FLT21	$1,682.00
Solid Bottom Pantry Pullout w/ Soft-Close — (6) Shelves/ (4) Door-Mount Brackets					
5373-08-**	Pantry Pullout	8-1/4" (210 mm) W x 21-11/16" (550 mm) D x 73-5/8" – 80-3/4" (1870 mm - 2051 mm) H	8-1/2" (216 mm)	T12	$1,638.50
5373-10-**	Pantry Pullout	10-1/4" (260 mm) W x 21-11/16" (550 mm) D x 73-5/8" – 80-3/4" (1870 mm - 2051 mm) H	10-1/2" (267 mm)	FLT12	$1,624.40
5373-13-**	Pantry Pullout	13-1/4" (337 mm) W x 21-11/16" (550 mm) D x 73-5/8" – 80-3/4" (1870 mm - 2051 mm) H	13-1/2" (343 mm)	FLT15	$1,682.00
5373-16-**	Pantry Pullout	16-1/4" (413 mm) W x 21-11/16" (550 mm) D x 73-5/8" – 80-3/4" (1870 mm - 2051 mm) H	16-1/2" (419 mm)	FLT18	$1,841.00
5373-19-**	Pantry Pullout	19-1/4" (489 mm) W x 21-11/16" (550 mm) D x 73-5/8" – 80-3/4" (1870 mm - 2051 mm) H	19-1/2" (495 mm)	FLT21	$1,885.00
Accessories					
57-EXTEND-1	Extender Bracket	1-1/8" (28 mm) W x 1-1/8" (28 mm) D x 8" (203 mm) H			$21.75

5700 Series

Wire Pantry Pullout

Soft Close

- Available in (6) widths and (4) height ranges for 24" deep cabinetry
- Full-extension slides w/ soft-close
- Adjustable door-mount brackets
- Kit packaged with frame, baskets and hardware

5743-20-CR-1

BASKET WIDTH
4-1/8" (105 mm)
8" (203 mm)
10" (254 mm)
14" (356 mm)
16" (406 mm)
19" (482 mm)

Adjustable door-mount bracket

Frame height adjustment

5773-10-CR-1
Pullout Pantry
(10" version shown)

With the adjustable shelf extender bracket, you can move the top shelf on our 5300 Series pantries with ease. The slide-on design installs effortlessly when affixing to the fully-extended frame, letting you rearrange your shelves and maximize your storage space.

Wire Pantry Pullout w/ Soft-Close — (4) Shelves/ (3) Door-Mount Brackets

PRODUCT	DESCRIPTION	DIMS	MCO	CAB	SLP
5743-04-CR-1	Pantry Pullout	4-13/32" (113 mm) W x 21-23/32" (552 mm) D x 43-13/32 - 50-3/4" (1103 - 1290 mm) H	4-1/2" (114 mm)	T9	$1,058.50
5743-08-CR-1	Pantry Pullout	8" (204 mm) W x 21-23/32" (552 mm) D x 43-13/32 - 50-3/4" (1103 - 1290 mm) H	8-1/2" (216 mm)	T12	$1,116.50
5743-10-CR-1	Pantry Pullout	10" (254 mm) W x 21-23/32" (552 mm) D x 43-13/32 - 50-3/4" (1103 - 1290 mm) H	10-1/2" (268 mm)	T15	$1,203.50
5743-14-CR-1	Pantry Pullout	14" (356 mm) W x 21-23/32" (552 mm) D x 43-13/32 - 50-3/4" (1103 - 1290 mm) H	14-7/8" (378 mm)	T18	$1,261.50
5743-16-CR-1	Pantry Pullout	16" (407 mm) W x 21-23/32" (552 mm) D x 43-13/32 - 50-3/4" (1103 - 1290 mm) H	16-1/2" (419 mm)	T21	$1,319.50
5743-20-CR-1	Pantry Pullout	20" (508 mm) W x 21-23/32" (552 mm) D x 43-13/32 - 50-3/4" (1103 - 1290 mm) H	20-1/2" (521 mm)	T24	$1,363.00
5750-04-CR-1	Pantry Pullout	4-13/32" (113 mm) W x 21-23/32" (552 mm) D x 50-3/4 - 58-9/32" (1290 - 1481 mm) H	4-1/2" (114 mm)	T9	$1,015.00
5750-08-CR-1	Pantry Pullout	8" (204 mm) W x 21-23/32" (552 mm) D x 50-3/4 - 58-9/32" (1290 - 1481 mm) H	8-1/2" (216 mm)	T12	$1,131.00
5750-10-CR-1	Pantry Pullout	10 " (254 mm) W x 21-23/32" (552 mm) D x 50-3/4 - 58-9/32" (1290 - 1481 mm) H	10-1/2" (268 mm)	T15	$1,189.00
5750-14-CR-1	Pantry Pullout	14" (356 mm) W x 21-23/32" (552 mm) D x 50-3/4 - 58-9/32" (1290 - 1481 mm) H	14-7/8" (378 mm)	T18	$1,261.50
5750-16-CR-1	Pantry Pullout	16-1/4" (413 mm) W x 21-11/16" (550 mm) D x 50-3/4" – 58-9/32" (1290 mm - 1481 mm) H	16-1/2" (419 mm)	T21	$1,305.00
5750-20-CR-1	Pantry Pullout	20" (508 mm) W x 21-23/32" (552 mm) D x 50-3/4 - 58-9/32" (1290 - 1481 mm) H	20-1/2" (521 mm)	T24	$1,348.50
Wire Pantry Pullout w/ Soft-Close — (5) Shelves/ (4) Door-Mount Brackets					
5758-04-CR-1	Pantry Pullout	4-13/32" (113 mm) W x 21-23/32" (552 mm) D x 58-1/4 - 65-3/4" (1480 - 1671 mm) H	4-1/2" (114 mm)	T9	$1,174.50
5758-08-CR-1	Pantry Pullout	8" (204 mm) W x 21-23/32" (552 mm) D x 58-1/4 - 65-3/4" (1480 - 1671 mm) H	8-1/2" (216 mm)	T12	$1,348.50
5758-10-CR-1	Pantry Pullout	10" (254 mm) W x 21-23/32" (552 mm) D x 58-1/4 - 65-3/4" (1480 - 1671 mm) H	10-1/2" (268 mm)	T15	$1,334.00
5758-14-CR-1	Pantry Pullout	14" (356 mm) W x 21-23/32" (552 mm) D x 58-1/4 - 65-3/4" (1480 - 1671 mm) H	14-7/8" (378 mm)	T18	$1,450.00
5758-16-CR-1	Pantry Pullout	16" (407 mm) W x 21-23/32" (552 mm) D x 58-1/4 - 65-3/4" (1480 - 1671 mm) H	16-1/2" (419 mm)	T21	$1,464.50
5758-20-CR-1	Pantry Pullout	20" (508 mm) W x 21-23/32" (552 mm) D x 58-1/4 - 65-3/4" (1480 - 1671 mm) H	20-1/2" (521 mm)	T24	$1,537.00
Wire Pantry Pullout w/ Soft-Close — (6) Shelves/ (4) Door-Mount Brackets					
5773-04-CR-1	Pantry Pullout	4-13/32" (113 mm) W x 21-23/32" (552 mm) D x 73-5/8 - 80-3/4" (1871 - 2052 mm) H	4-1/2" (114 mm)	T9	$1,174.50
5773-08-CR-1	Pantry Pullout	8" (204 mm) W x 21-23/32" (552 mm) D x 73-5/8 - 80-3/4" (1871 - 2052 mm) H	8-1/2" (216 mm)	T12	$1,377.50
5773-10-CR-1	Pantry Pullout	10" (254 mm) W x 21-23/32" (552 mm) D x 73-5/8 - 80-3/4" (1871 - 2052 mm) H	10-1/2" (268 mm)	T15	$1,435.50
5773-14-CR-1	Pantry Pullout	14" (356 mm) W x 21-23/32" (552 mm) D x 73-5/8 - 80-3/4" (1871 - 2052 mm) H	14-7/8" (378 mm)	T18	$1,551.50
5773-16-CR-1	Pantry Pullout	16" (407 mm) W x 21-23/32" (552 mm) D x 73-5/8 - 80-3/4" (1871 - 2052 mm) H	16-1/2" (419 mm)	T21	$1,595.00
5773-20-CR-1	Pantry Pullout	20" (508 mm) W x 21-23/32" (552 mm) D x 73-5/8 - 80-3/4" (1871 - 2052 mm) H	20-1/2" (521 mm)	T24	$1,653.00
Accessories					
57-EXTEND-1	Extender Bracket	1-1/8" (29 mm) W x 1-1/8" (29 mm) D x 8" (203 mm) H			$21.75

GLD Series

Glideware™ Pullout

- Designed for 14" to 22" cabinet depths
- Solid wood construction, natural maple or gray
- Mounts to cabinet top and rear
- (2) slide configurations:
  - Full-extension, ball-bearing slides
  - Full-extension, undermount slides w/ BLUM soft-close
- Up to (7) nickel chrome hooks
- US Patent No. 9,433,283 and 9,022,237
- TSCA Title VI compliant

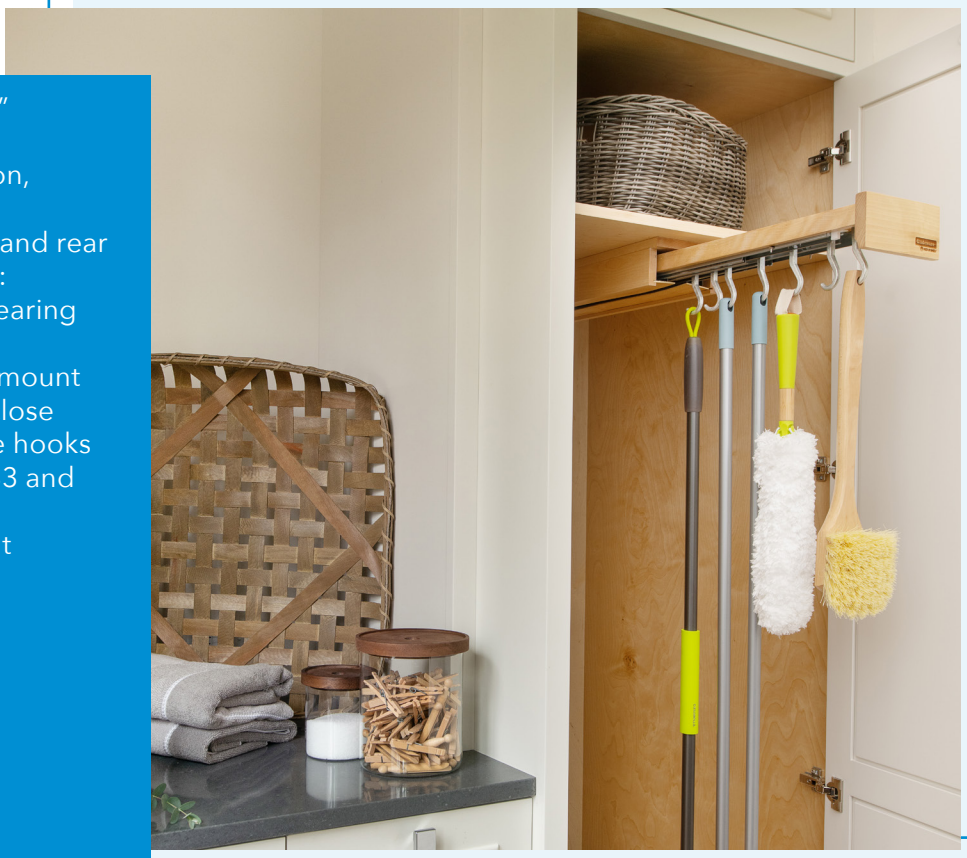

GLD-W14-BC-5

Scan for video

GLD-HK-2-NC-5
Glideware™ Back-to-Back Hook
Nickel Chrome

NOTE: Dimensions are without the optional rear mounting bracket. Rear mounting bracket is 6-1/4" (159 mm) wide and adds 3/4" (19 mm) to the depth, and 13/16" (20 mm) to the height. MCO dimensions and CAB recommendations are dependent on what accessories you intend on hanging on the product.

PRODUCT	DESCRIPTION	DIMS	CAB	FINISH	SLP
Glideware™ Pullout w/ (5 or 7) Short Hooks					
GLD-W14-SC-5	14" Glideware™	4" (102 mm) W x 14" (356 mm) D x 4-1/8" (105 mm) H	T18	Maple	$142.10
GLD-W22-SC-7	22" Glideware™	4" (102 mm) W x 22" (559 mm) D x 4-1/8" (105 mm) H	T18	Maple	$172.55
Glideware™ Pullout w/ BLUM Soft-Close and (5 or 7) Long Hooks					
GLD-W16-BC-5	16" Glideware™	6" (153 mm) W x 16" (407 mm) D x 5-1/16" (129 mm) H	T18	Maple	$174.00
GLD-W22-BC-7	22" Glideware™	6" (153 mm) W x 22" (559 mm) D x 5-1/16" (129 mm) H	T18	Maple	$355.25
Glideware™ Accessories					
GLD-HK-S-NC-7	(7) Glideware™ Short Hooks	1" (26 mm) W x 1-1/2" (39 mm) D x 3-1/8" (80 mm) H		Nickel	$14.35 ea.
GLD-HK-L-NC-7	(7) Glideware™ Long Hooks	1" (26 mm) W x 1-1/2" (39 mm) D x 4" (102 mm) H		Nickel	$17.85 ea.
GLD-HK-2-NC-5	(5) Glideware™ Back-to-Back Hooks	1" (26 mm) W x 2-21/32" (68 mm) D x 3-1/8" (80 mm) H		Nickel	$19.70 ea.

Wood D-Shaped Pantry Set

Wood Series

4265-22-52 & 4235-20-5

- Designed for pantry/tall cabinet applications
- (5) wood D-Shaped shelves
- Natural maple construction with semi-gloss finish
- 5/8" thick high density multi-ply shelf
- 1" high solid wood rim
- Independent rotating hardware, chrome
- 56" – 62" telescoping post
- Mounts to cabinet ceiling and floor
- TSCA Title VI compliant

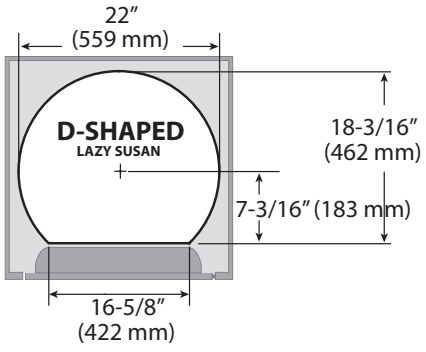

(5) Shelf Wood D-Shaped Pantry Set					
PRODUCT	DESCRIPTION	DIMS	CAB	FINISH	SLP
4265-22-52	D-Shaped Set	22" (559 mm) Diameter	T24	Maple	$871.45
(5) Wood Door Storage Tray w/ Screw in Clips					
4235-20-5	20" Door Storage Tray	19-3/4" (502 mm) W x 4-1/4" (108 mm) D x 3-5/8" (91 mm) H	T24	Maple	$59.45 ea.

Polymer Series

Polymer D-Shaped Pantry Set

- Designed for pantry/tall cabinet applications
- (5) D-Shaped polystyrene shelves, almond or white
- Independent rotating hardware, chrome
- 56" – 62" telescoping post
- Mounts to cabinet ceiling and floor

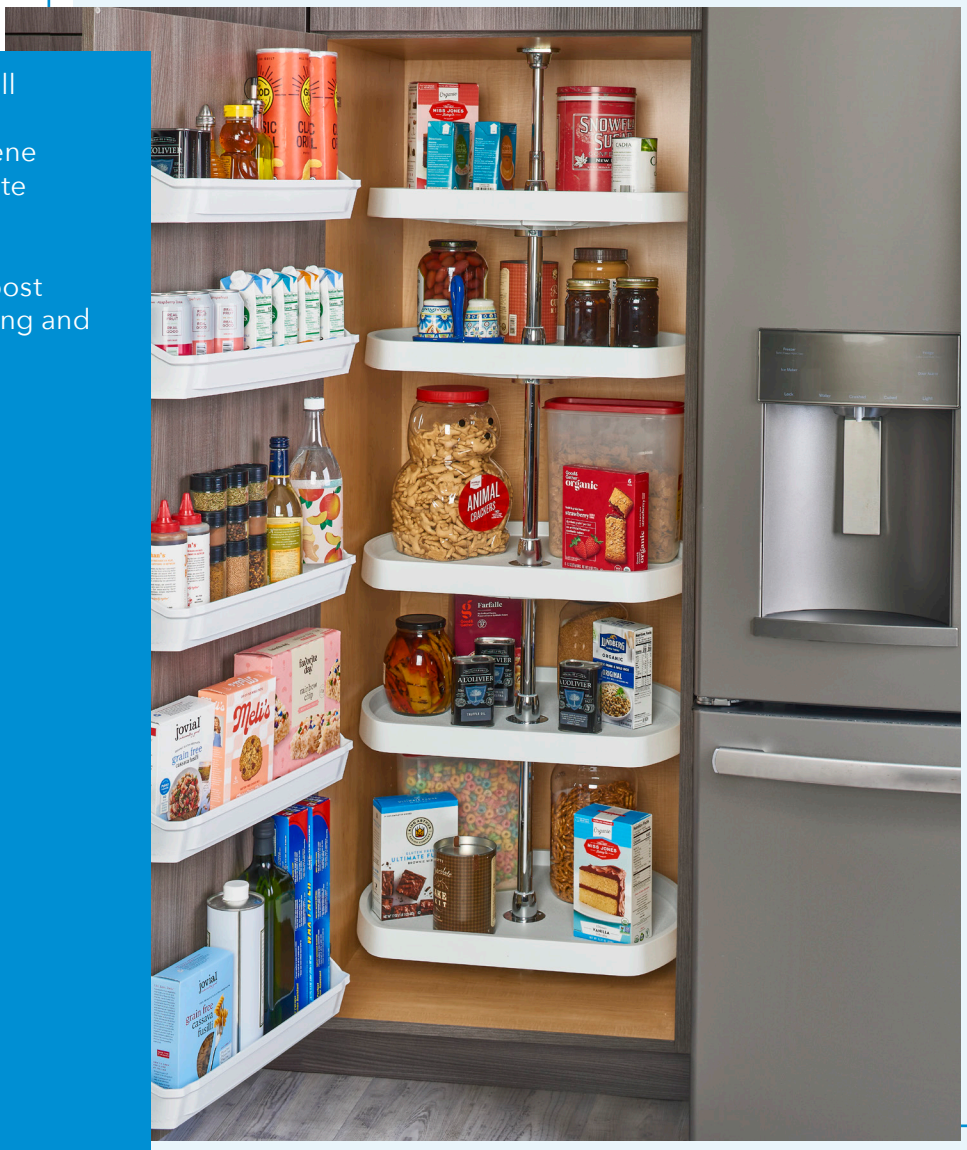

6265-22-11-52 & 6235-20-11-52

NOTE: ** Insert "11" for White finish or "15" for Almond finish

(5) Shelf Polymer D-Shaped Lazy Susan

PRODUCT	DESCRIPTION		FINISH	SLP
6265-22-**-52	(5) Shelf D-Shaped Set	22" (560 mm) Diameter	Polymer	$391.50
6235-20-**-52	(5) Door Storage Trays	19-3/4" (502 mm) W x 4-1/4" (110 mm) D x 3-9/16" (95 mm) H	Polymer	$85.55

Polymer Full-Circle Pantry Set

6065 Series

6065-18-11-52 & 6235-14-11-52

- Designed for pantry/tall cabinet applications
- (5) Full-Circle polystyrene shelves, almond or white
- Independent rotating hardware, chrome
- 56" – 62" telescoping post
- Mounts to cabinet ceiling and floor

NOTE: ** Insert "11" for White finish or "15" for Almond finish

(5) Shelf Polymer Full-Circle Lazy Susan					
PRODUCT	DESCRIPTION	DIMS	CAB	FINISH	SLP
6065-16-**-52	Full-Circle Set	16" (410 mm) Diameter	T18	Polymer	$417.60
6065-18-**-52	Full-Circle Set	18" (457 mm) Diameter	T21	Polymer	$432.10
(5) Polymer Door Storage Tray w/ Screw in Clips					
6235-14-**-52	Door Storage Trays	13-3/4" (350 mm) W x 4-1/4" (110 mm) D x 3-9/16" (95 mm) H	T18	Polymer	$68.15 ea.

PROP 65 WARNING FOR CALIFORNIA RESIDENTS

WARNING: These products can expose you to chemicals such as formaldehyde, lead or styrene, which are known to the State of California to cause cancer and birth defects or other reproductive harm. For more information go to www.P65Warnings.ca.gov

REV-A-SHELF®

DRAWER

Create a clutter-free home with the inventive selection of drawer accessories from Rev-A-Shelf®. Organizing is simple with great products like our cutlery trays, utensil trays and universal spice inserts. We've even found a way to expand the space in your drawer with our unique two-tier system for cookware, cutlery and cosmetics. From the kitchen, bathroom or to the laundry room, Rev-A-Shelf® drawer accessories furnish unlimited storage solutions for every room in your home.

Innovation through ***Organization***™

4ADI Series

Adjustable Deep Drawer Divider System

NEW!

- Designed for 36" or smaller base cabinet deep drawers
- Shipped ready to assemble and fits into an existing deep drawer
- (9) adjustable and removable dividers for easy customization
- Overall height of insert is 6"
- Trimmable
- Easy drop-in installation
- Maple hardwood and plywood construction
- TSCA Title VI compliant

Adjustable dividers for easy customization

Adjustable Deep Drawer Divider System

PRODUCT	DESCRIPTION	DIMS	CAB	FINISH	SLP
4ADI-36-1	Deep Drawer System	31-7/32" (793 mm) W x 19-1/2" (496 mm) D x 5-31/32" (152 mm) H	B36	Maple	$219.65

Deep Drawer Insert

4SDI Series

4SDI-24T-1

NEW!

- Designed for 18″ and 24″ base cabinet deep drawer
- Just under 2″ tall
- Trim-to-fit design
- Drop-in installation
- Natural maple construction with a semi-gloss finish
- (1) rear compartment and up to (2) tiers
- Compatible with the 4WD Wood Drawer Divider when using multiple inserts in one drawer (sold separately)
- Can be used with existing OXO 1.7 qt. containers (not included)
- TSCA Title VI compliant

4SDI-18T-1
Deep Drawer Insert

Deep Drawer Insert

PRODUCT	DESCRIPTION	DIMS	CAB	FINISH	SLP
4SDI-18T-1	Drawer Insert	13-7/32″ (337 mm) W x 19-1/2″ (496 mm) D x 1-15/16″ (50 mm) H	B18	Maple	$98.60
4SDI-24T-1	Drawer Insert	19-1/4″ (489 mm) W x 19-1/2″ (496 mm) D x 1-15/16″ (50 mm) H	B24	Maple	$133.40

4OXO Series

Deep Drawer Organizer Insert w/ OXO® Containers

NEW!

- Designed for 18″ and 24″ base cabinet deep drawers
- Overall height with containers is 7-7/8″
- Trim-to-fit existing drawers
- Drop-in installation
- Natural maple construction with semi-gloss finish
- (1) rear compartment and up to (2) tiers
- 18″ comes with (6) OXO 1.7 qt. containers
- 24″ comes with (8) OXO 1.7 qt. containers
- TSCA Title VI compliant

4OXO-24-1

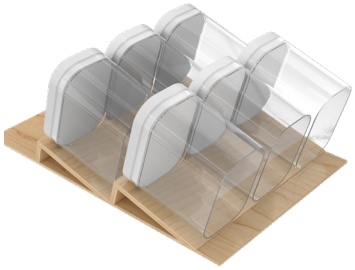

4OXO-18-1
Deep Drawer Organizer
w/ OXO® Containers

Deep Drawer Organizer w/ OXO® Containers

PRODUCT	DESCRIPTION	DIMS	CAB	FINISH	SLP
4OXO-18-1	Deep Drawer Organizer w/ (6) OXO® Containers	13-7/32″ (337 mm) W x 19-1/2″ (496 mm) D x 7-7/8″ (200 mm) H	B18	Maple	$335.10
4OXO-24-1	Deep Drawer Organizer w/ (8) OXO® Containers	19-1/4″ (489 mm) W x 19-1/2″ (496 mm) D x 7-7/8″ (200 mm) H	B24	Maple	$412.50

Shallow Adjustable Drawer Divider Insert

4WDIV Series

4WDIV-24SH-1

NEW!

- Designed for 24", 30" or 36" base cabinet drawers, can be trimmed to fit smaller sizes
- Shipped ready to assemble and fits into existing deep drawer
- Dividers are adjustable for easy customization
- Installs w/ (4) screws
- Maple construction with semi-gloss finish
- Each 4WDIV comes w/ (2) notched, (3) short, and up to (4) long dividers
- TSCA Title VI compliant

Adjustable dividers for easy customization

Shallow Adjustable Drawer Divider Insert

PRODUCT	DESCRIPTION	DIMS	CAB	FINISH	SLP
4WDIV-24SH-1	Deep Drawer Divider	19-1/4" (489 mm) W x 19-13/16" (503 mm) D x 2-3/8" (60 mm) H	B18	Maple	$129.05
4WDIV-30SH-1	Deep Drawer Divider	25-1/4" (642 mm) W x 19-13/16" (503 mm) D x 2-3/8" (60 mm) H	B24	Maple	$137.75
4WDIV-36SH-1	Deep Drawer Divider	31-7/32" (793 mm) W x 19-13/16" (503 mm) D x 2-3/8" (60 mm) H	B36	Maple	$176.75

4WDIV Series

Adjustable Deep Drawer Divider Insert

- Designed for 36″ or smaller base cabinet deep drawers
- Trim-to-fit existing drawer
- Installs w/ (4) screws
- Maple construction with semi-gloss finish
- Each 4WDIV comes w/ (2) notched dividers and (3) cross dividers
- Insert kits include:
  24″ - (2) standard dividers
  30″ - (3) standard dividers
  36″ - (4) standard dividers
- TSCA Title VI compliant

4WDIV-24-1
Deep Drawer Divider
(24″ version shown)

4WDIV-30-1
Deep Drawer Divider
(30″ version shown)

4WDIV-36-1

Customization for endless uses

Adjustable Deep Drawer Divider Insert

PRODUCT	DESCRIPTION	DIMS	CAB	FINISH	SLP
4WDIV-24-1	24″ Deep Drawer Divider	18-3/4″ (477 mm) W x 19-13/16″ (504 mm) D x 6″ (153 mm) H	B24	Maple	$161.65
4WDIV-30-1	30″ Deep Drawer Divider	24-3/4″ (629 mm) W x 19-13/16″ (504 mm) D x 6″ (153 mm) H	B30	Maple	$192.85
4WDIV-36-1	36″ Deep Drawer Divider	30-3/4″ (782 mm) W x 19-13/16″ (504 mm) D x 6″ (153 mm) H	B36	Maple	$224.05

Drying Rack Drawer

4WDR Series

NEW SIZES!

blum

- Designed for 24" and 30" face-frame base cabinet drawer openings
- Natural maple construction with semi-gloss finish
- Rust-resistant stainless steel rods
- 24" has (13) rods and 30" has (15) rods
- Patent-pending rack with (2) positions of placement
- Requires 42" and 48" of clearance when opened
- Folds away when not in use
- 4WDR-24HSC-1 and 4WDR-30HSC-1 include BLUM soft-close slides
- 4WDR-24H-1 and 4WDR-30H-1 (sold without slides)
- Figure 8 door-mount brackets
- Drawer front not included
- TSCA Title VI compliant

4WDR-24HSC-1

Patent-pending rack with
(2) positions of placement

4WDR-30HSC-1
Wood Drying Rack Pullout
w/ BLUM Soft-Close

JUST ADD YOUR OWN DRAWER FRONT!

Wood Drying Rack w/ BLUM Soft-Close

PRODUCT	DESCRIPTION	DIMS	MCO	CAB	FINISH	SLP
4WDR-24HSC-1	Wood Drying Rack	21" (534 mm) W x 22" (559 mm) D x 4-13/32" (113 mm) H	21" (533 mm)	B24	Maple	$345.10
4WDR-30HSC-1	Wood Drying Rack	27" (686 mm) W x 22" (559 mm) D x 4-13/32" (113 mm) H	27" (686 mm)	B30	Maple	$499.80
Wood Drying Rack - No Slides						
4WDR-24H-1	Wood Drying Rack	20-17/32" (522 mm) W x 20-31/32" (533 mm) D x 3-7/8" (99 mm) H	21" (521 mm)	B24	Maple	$290.00
4WDR-30H-1	Wood Drying Rack	26-17/32" (674 mm) W x 20-31/32" (533 mm) D x 3-7/8" (99 mm) H	27" (686 mm)	B30	Maple	$352.50

4PDI Series

Plate Divider Insert

- Designed for 36″ or 33″ deep drawer base cabinet
- Natural maple construction with semi-gloss finish
- Trim-to-fit existing drawer
- Drop-in installation
- (16) compartments
- Holds (8) small plates up to 1″ thick, and 8-1/4″ in diameter and (8) large plates 1-1/4″ thick, and 10-3/4″ in diameter
- TSCA Title VI compliant

4PDI-36
Wood Plate Divider Insert

Wood Plate Divider Insert

PRODUCT	DESCRIPTION	DIMS	CAB	FINISH	SLP
4PDI-36	Plate Divider Insert	33-3/32″ (841 mm) W x 22″ (550 mm) D x 2-31/32″ (75 mm) H	DB36-3 & DB33-3	Maple	$169.65

Tiered Maxx Drawer

4WTMD Series

blum

- Designed for 24" base face frame cabinet drawers
- Complete drawer system, just add your drawer front
- Easy installation
- Natural maple construction with semi-gloss finish
- Full-extension, undermount w/ BLUM soft-close slides
- 5/8" drawer side walls
- (5) drawer compartments
- Comes with (8) short dividers, (5) long dividers and (26) clips
- Mounts to cabinet drawer front, rear and sidewalls
- Figure 8 door-mount brackets
- Drawer front not included
- TSCA Title VI compliant

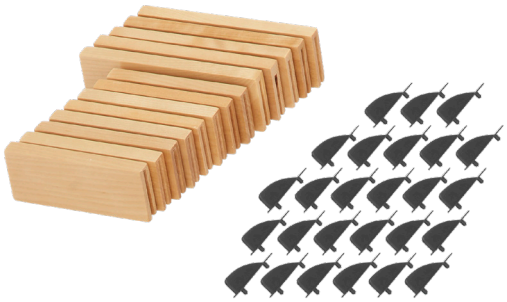

Comes with (8) short dividers, (5) long dividers and (26) clips

Scan for video

JUST ADD YOUR OWN DRAWER FRONT!

NOTE: Requires 30" of clearance when opened

Tiered Maxx Drawer w/ BLUM Soft-Close

PRODUCT	DESCRIPTION	DIMS	MCO	CAB	FINISH	SLP
4WTMD-24HSC-1	Tiered Maxx Drawer	21" (534 mm) W x 21-17/32" (548 mm) D x 4-3/8" (111 mm) H	21" (533 mm)	B24	Maple	$420.95

4WTCDD Series

Tiered Deep Drawer

- Designed for 30" and 36" base cabinet deep drawers
- Complete drawer system, just add your drawer front
- Easy installation
- Natural maple construction with semi-gloss finish
- Full-extension, undermount w/ BLUM soft-close slides
- (3) drawer compartments
- Sliding top tray is designed for use with 4WCT, 4WUT and 4WKB inserts (sold separately)
- Mounts to cabinet drawer front, rear and sidewalls
- Figure 8 door mount-brackets
- US Patent No. D843,791
- TSCA Title VI compliant

4WTCDD-36HSC-1

Scan for video

4WTCDD-30HSC-1 & 4WTCDD-724HFLSC-1
Tiered Deep Drawers
(30" version shown)

Top tier compatible with our trimmable inserts

Full Access Tiered Deep Drawer w/ BLUM Soft-Close

PRODUCT	DESCRIPTION	DIMS	MCO	CAB	FINISH	SLP
4WTCDD-724HFLSC-1	Tiered Deep Drawer	28-1/2" (724 mm) W x 22-3/16" (564 mm) D x 8-1/32" (204 mm) H	28-1/2" (724 mm)	FLB30	Maple	$567.65
4WTCDD-876HFLSC-1	Tiered Deep Drawer	34-1/2" (877 mm) W x 22-3/16" (564 mm) D x 8-1/32" (204 mm) H	34-1/2" (876 mm)	FLB36	Maple	$599.55
Face Frame Tiered Deep Drawer w/ BLUM Soft-Close						
4WTCDD-30HSC-1	Tiered Deep Drawer	27" (686 mm) W x 22-3/16" (564 mm) D x 8-1/32" (204 mm) H	27" (686 mm)	FFB30	Maple	$507.65
4WTCDD-36HSC-1	Tiered Deep Drawer	33" (839 mm) W x 22-3/16" (564 mm) D x 8-1/32" (204 mm) H	33" (838 mm)	FFB36	Maple	$526.35

Charging Drawer

4WCDB Series

- Designed for 18" base cabinet drawers
- Just add your drawer front
- Natural maple construction with semi-gloss finish
- Full-extension, undermount w/ BLUM soft-close slides
- Integrated cord guide to ensure safe operation
- Figure 8 door-mounting brackets
- Shock absorbent mat, black
- Overall safety of this product is determined by its end use
- TSCA Title VI compliant

Charging Drawer

- (2) 120V plugs and (2) 2.1 amp USB ports
- Tamper-resistant outlets
- Max Current: AC 12 amps @ 120VAC; USB 2.1 amp & 5VDC
- UL recognized to UL962/ CSA-C22.2 No. 0-10
- Power cord with NEMA 5 – 15 plug

USB

- In-drawer receptacle with thermal fuse protection for heat sensing to prevent overheating, (4) 2.1-amp USB-A ports and (1) USB-C adapter
- Max Current: USB 4.2 amp
- Additional front storage compartment

4WCDB-18HFLSC-1-USB

Scan for video

4WCDB-18HSC-1
Charging Drawer

Integrated cord guide mounts to cabinet side and rear wall

Full Access USB Charging Drawer w/ BLUM Soft-Close						
PRODUCT	DESCRIPTION	DIMS	MCO	CAB	FINISH	SLP
4WCDB-18HFLSC-1-USB	USB Charging Drawer	16-1/2" (419 mm) W x 23-1/2" (597 mm) D x 4-5/16" (110 mm) H	16-1/2" (419 mm)	FLB18	Maple	$798.95
Full Access Charging Drawer w/ BLUM Soft-Close						
4WCDB-18HFLSC-1	Charging Drawer	16-1/2" (420 mm) W x 22-7/16" (571 mm) D x 4-5/16" (110 mm) H	16-1/2" (419 mm)	FLB18	Maple	$600.60
Face Frame Charging Drawer w/ BLUM Soft-Close						
4WCDB-18HSC-1	Charging Drawer	15" (381 mm) W x 22-7/16" (571 mm) D x 4-5/16" (110 mm) H	15" (381 mm)	FFB18	Maple	$604.50

4WTCD Series

Tiered Cutlery Drawer

4WTCD-18HSC-1

- Designed for 15″, 18″, 21″ and 24″ base cabinet drawers
- Complete drawer system, just add your drawer front
- Easy installation
- Natural maple construction with semi-gloss finish
- Full-extension, undermount w/ BLUM soft-close slides
- Drawer features up to (7) compartments
- Sliding top tray features up to (7) compartments
- Mounts to cabinet drawer front, rear and side walls
- Figure 8 door-mount brackets
- TSCA Title VI compliant

JUST ADD YOUR OWN DRAWER FRONT!

Scan for video

4WTCD-15H-1 &
4WTCD-15HSC-1
Face Frame Tiered Cutlery Drawer
(15" version shown)

4WTCD-18H-1 &
4WTCD-18HSC-1
Face Frame Tiered Cutlery Drawer
(18" version shown)

4WTCD-21H-1 &
4WTCD-21HSC-1
Face Frame Tiered Cutlery Drawer
(21" version shown)

4WTCD-24H-1 &
4WTCD-24HSC-1
Face Frame Tiered Cutlery Drawer
(24" version shown)

4WTCD-343HFL-1 &
4WTCD-343HFLSC-1
Full Access Tiered Cutlery Drawer
(15" version shown)

4WTCD-419HFL-1 &
4WTCD-419HFLSC-1
Full Access Tiered Cutlery Drawer
(18" version shown)

4WTCD-495HFL-1 &
4WTCD-495HFLSC-1
Full Access Tiered Cutlery Drawer
(21" version shown)

4WTCD-572HFL-1 &
4WTCD-572HFLSC-1
Full Access Tiered Cutlery Drawer
(24" version shown)

NOW YOU HAVE THE CHOICE!

AVAILABLE WITH BLUM® CONCEALED SLIDES...OR PROVIDE YOUR OWN!

Designed to be used with BLUM 563H533 or Grass Elite 7523-16/550/533 concealed slides.

PRODUCT	DESCRIPTION	DIMS	MCO	CAB	FINISH	SLP
Full Access Tiered Cutlery Drawer, w/ BLUM Soft-Close						
4WTCD-343HFLSC-1	Tiered Cutlery Drawer	13-1/2" (343 mm) W x 21-21/32" (550 mm) D x 4-5/16" (110 mm) H	13-1/2" (343 mm)	FLB15	Maple	$303.05
4WTCD-419HFLSC-1	Tiered Cutlery Drawer	16-1/2" (420 mm) W x 21-21/32" (550 mm) D x 4-5/16" (110 mm) H	16-1/2" (419 mm)	FLB18	Maple	$325.50
4WTCD-495HFLSC-1	Tiered Cutlery Drawer	19-1/2" (496 mm) W x 21-21/32" (550 mm) D x 4-5/16" (110 mm) H	19-1/2" (495 mm)	FLB21	Maple	$349.45
4WTCD-572HFLSC-1	Tiered Cutlery Drawer	22-1/2" (572 mm) W x 21-21/32" (550 mm) D x 4-5/16" (110 mm) H	22-1/2" (572 mm)	FLB24	Maple	$376.25
Full Access Tiered Cutlery Drawer - No Slides						
4WTCD-343HFL-1	Tiered Cutlery Drawer	13-1/32" (331 mm) W x 21" (534 mm) D x 3-3/4" (96 mm) H	N/A	FLB15	Maple	$233.45
4WTCD-419HFL-1	Tiered Cutlery Drawer	16-1/32" (408 mm) W x 21" (534 mm) D x 3-3/4" (96 mm) H	N/A	FLB18	Maple	$254.50
4WTCD-495HFL-1	Tiered Cutlery Drawer	19-1/32" (484 mm) W x 21" (534 mm) D x 3-3/4" (96 mm) H	N/A	FLB21	Maple	$268.25
4WTCD-572HFL-1	Tiered Cutlery Drawer	22-1/32" (560 mm) W x 21" (534 mm) D x 3-3/4" (96 mm) H	N/A	FLB24	Maple	$316.80
Face Frame Tiered Cutlery Drawer, w/ BLUM Soft-Close						
4WTCD-15HSC-1	Tiered Cutlery Drawer	12" (305 mm) W x 21-3/4 " (553 mm) D x 4-5/16" (110 mm) H	12" (305 mm)	FFB15	Maple	$273.30
4WTCD-18HSC-1	Tiered Cutlery Drawer	15" (381 mm) W x 21-3/4" (553 mm) D x 4-5/16" (110 mm) H	15" (381 mm)	FFB18	Maple	$311.75
4WTCD-21HSC-1	Tiered Cutlery Drawer	18" (458 mm) W x 21-3/4" (553 mm) D x 4-5/16" (110 mm) H	18" (457 mm)	FFB21	Maple	$319.70
4WTCD-24HSC-1	Tiered Cutlery Drawer	21" (534 mm) W x 21-3/4" (553 mm) D x 4-5/16" (110 mm) H	21" (533 mm)	FFB24	Maple	$342.95
Face Frame Tiered Cutlery Drawer - No Slides						
4WTCD-15H-1	Tiered Cutlery Drawer	11-17/32" (293 mm) W x 21" (534 mm) D x 3-3/4" (96 mm) H	N/A	FFB15	Maple	$203.70
4WTCD-18H-1	Tiered Cutlery Drawer	14-17/32" (370 mm) W x 21" (534 mm) D x 3-3/4" (96 mm) H	N/A	FFB18	Maple	$235.65
4WTCD-21H-1	Tiered Cutlery Drawer	17-17/32" (446 mm) W x 21" (534 mm) D x 3-3/4" (96 mm) H	N/A	FFB21	Maple	$265.35
4WTCD-24H-1	Tiered Cutlery Drawer	20-17/32" (522 mm) W x 21" (534 mm) D x 3-3/4" (96 mm) H	N/A	FFB24	Maple	$280.55

4WTCD Series

Tiered Combination Drawer

- Designed for 30" and 36" base cabinet drawers
- Complete drawer system, just add your drawer front
- Easy installation
- Natural maple construction with semi-gloss finish
- Full-extension, undermount w/ BLUM soft-close slides
- Drawer features up to (6) compartments and a built-in knife organizer
- Sliding top tray features up to (6) compartments
- Mounts to cabinet side and rear wall
- Figure 8 door-mounting brackets
- (1) Foil Wrap Insert
- US Patent No. D843,791
- TSCA Title VI compliant

4WTCD-876HFLSC-1

Scan for video

4WTCD-724HFLSC-1 & 4WTCD-724HFL-1
Tiered Combination Drawer
(Full Access 30" shown)

4WTCD-36HFLSC-1 & 4WTCD-36HFL-1
Tiered Combination Drawer
(Face Frame 36" shown)

Sliding top tray features up to (6) compartments

PRODUCT	DESCRIPTION	DIMS	MCO	CAB	FINISH	SLP
Full Access Tiered Combination Drawer w/ BLUM Soft-Close						
4WTCD-724HFLSC-1	Tiered Combination Drawer	28-1/2" (724 mm) W x 22-3/16" (564 mm) D x 4-7/16" (113 mm) H	28-1/2" (724 mm)	FLB30	Maple	$575.65
4WTCD-876HFLSC-1	Tiered Combination Drawer	34-1/2" (877 mm) W x 22-3/16" (564 mm) D x 4-7/16" (113 mm) H	34-1/2" (876 mm)	FLB36	Maple	$615.50
Full Access Tiered Combination Drawer - No Slides						
4WTCD-724HFL-1	Tiered Combination Drawer	28-1/32" (712 mm) W x 21" (534 mm) D x 3-3/4" (96 mm) H		FLB30	Maple	$413.25
4WTCD-876HFL-1	Tiered Combination Drawer	34-1/32" (865 mm) W x 21" (534 mm) D x 3-3/4" (96 mm) H		FLB36	Maple	$442.25
Face Frame Tiered Combination Drawer w/ BLUM Soft-Close						
4WTCD-30HSC-1	Tiered Combination Drawer	27" (686 mm) W x 22-1/4" (566 - 604 mm) D x 4-5/16" (110 mm) H	27" (686 mm)	FFB30	Maple	$543.75
4WTCD-36HSC-1	Tiered Combination Drawer	33" (839 mm) W x 22-1/4" (566 - 604 mm) D x 4-5/16" (110 mm) H	33" (838 mm)	FFB36	Maple	$595.25
Face Frame Tiered Combination Drawer - No Slides						
4WTCD-30H-1	Tiered Combination Drawer	26-17/32" (674 mm) W x 21" (534 mm) D x 3-3/4" (96 mm) H		FFB30	Maple	$334.95
4WTCD-36H-1	Tiered Combination Drawer	32-17/32" (827 mm) W x 21" (534 mm) D x 3-3/4" (96 mm) H		FFB36	Maple	$390.75

Tiered K-Cup Drawer

4WTCD Series

- Designed for face frame 18" base cabinet drawers
- Complete drawer system, just add your drawer front
- Easy installation
- Natural maple construction with semi-gloss finish
- Full-extension, undermount slides w/ BLUM soft-close
- Drawer features (8) compartments
- Sliding top tray holds (40) K-Cups
- Mounts to cabinet side and rear wall
- Figure 8 door-mounting bracket
- Patented design (US Patent No. D789,750S1)
- TSCA Title VI compliant

4WTCD-18HSC-KCUP-1 &
4WTCD-18H-KCUP-1
Tiered K-Cup Drawer

Scan for video

Face Frame Tiered K-Cup Drawer w/ BLUM Soft-Close						
PRODUCT	DESCRIPTION	DIMS	MCO	CAB	FINISH	SLP
4WTCD-18HSC-KCUP-1	Tiered K-Cup Drawer	15" (381 mm) W x 21-3/4" (553 mm) D x 4-5/16" (110 mm) H	15" (381 mm)	FFB18	Maple	$317.70
Face Frame Tiered K-Cup Drawer - No Slides						
4WTCD-18H-KCUP-1	K-Cup Drawer	15" (381 mm) W x 21-3/4" (553 mm) D x 4-5/16" (110 mm) H		FFB18	Maple	$244.05

4WCCB Series

Cut-Out Cutting Board Drawer

- Designed for 18" cabinet drawers
- Natural maple construction with semi-gloss finish
- Removable cut-out cutting board
- Removable funnel insert
- Odor-reducing stopper
- Full-extension, undermount slides w/ BLUM soft-close slides
- 5/8" drawer side walls
- Figure 8 door-mounting brackets
- Drawer front not included
- Waste container not included
- TSCA Title VI compliant

4WCCB-419HFLSC-1

Scan for video

Odor-reducing stopper

Removable food funnel for easy cleanup

Full Access Cut-Out Cutting Board Drawer w/ BLUM Soft-Close						
PRODUCT	DESCRIPTION	DIMS	MCO	CAB	FINISH	SLP
4WCCB-419HFLSC-1	Cut-Out Cutting Board Drawer	16-1/2" (420 mm) W x 21-21/32" (550 mm) D x 4-5/16" (110 mm) H	16-1/2" (419 mm)	FLB18	Maple	$375.85
Face Frame Cut-Out Cutting Board Drawer w/ BLUM Soft-Close						
4WCCB-18HSC-1	Cut-Out Cutting Board Drawer	15" (381 mm) W x 21-3/4" (553 mm) D x 4-5/16" (110 mm) H	15" (521 mm)	FFB18	Maple	$361.90

Combination Knife Holder/Cutting Board Drawer

4KCB Series

4KCB-419HFLSC-1

- Designed for 18", 21" and 24" face frame and 18" full access base cabinet drawers
  - Face frame fits 1-1/2"
  - Full access fits 3/4"
- Complete drawer system, just add your drawer front
- Natural maple construction with semi-gloss finish
- Full-extension, undermount w/ BLUM soft-close slides
- Up to (4) compartments and built-in knife organizer
- Mounts to cabinet drawer front, rear and side walls
- Figure 8 door-mount brackets
- Built-in locking mechanism
- (1) wood cutting board
- Drawer front not included
- TSCA Title VI compliant

Top tier stores the included cutting board

4KCB-21HSC-1
Combination Drawer
(21" version shown)

4KCB-18HSC-1
Combination Drawer
(18" version shown)

Scan for video

Full Access Combination Knife Holder/ Cutting Board Drawer w/ BLUM Soft-Close

PRODUCT	DESCRIPTION	DIMS	MCO	CAB	FINISH	SLP
4KCB-419HFLSC-1	Combination Drawer	16-1/2" (420 mm) W x 21-21/32" (550 mm) D x 4-13/32" (112 mm) H	16-1/2" (419 mm)	FLB18	Maple	$375.55
Combination Knife Holder/ Cutting Board Drawer w/ BLUM Soft-Close						
4KCB-18HSC-1	Combination Drawer	15" (381 mm) W x 21-3/4" (553 mm) D x 4-13/32" (112 mm) H	15" (381 mm)	FFB18	Maple	$364.70
4KCB-21HSC-1	Combination Drawer	18" (458 mm) W x 21-3/4" (5534 mm) D x 4-13/32" (112 mm) H	18" (457 mm)	FFB21	Maple	$401.80
4KCB-24HSC-1	Combination Drawer	21" (534 mm) W x 21-3/4 " (553 mm) D x 4-13/32" (112 mm) H	21" (533 mm)	FFB24	Maple	$433.55

4TT Series

Wood Tambour Table

- Designed for 1-1/2" face frame 24" base cabinet drawers
- Complete drawer system, just add your drawer front
- Easy installation
- Natural maple construction with semi-gloss finish
- Over-extension, 220 lb. rated, table slides (static load)
- Adds 31-3/4" counter-top space
- Mounts to cabinet drawer rail and rear wall
- Patented door-mount brackets with 5" of adjustability and micro-trim adjuster (US Patent No. 8,388,076)
- TSCA Title VI compliant

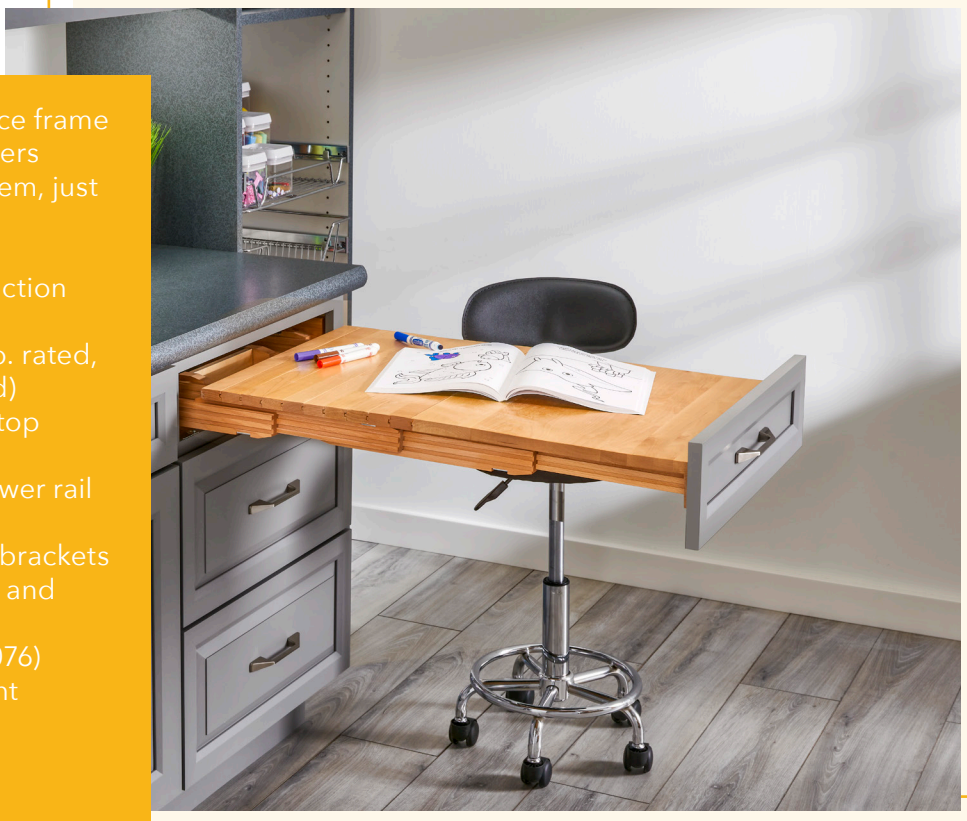

4TT-2133-1

4TT-2133-1
Tambour Table

Face Frame Wood Tambour Table

PRODUCT	DESCRIPTION	DIMS	MCO	CAB	FINISH	SLP
4TT-2133-1	Tambour Table	22" (559 mm) W x 19-15/16 - 24" (507 - 610 mm) D x 4-3/4" (121 mm) H	20-1/2" (521 mm) - FF 22" (559 mm) - FL	FFB24	Maple	$495.05

Wood Cutlery Tray Insert

4WCT Series

- Designed for 24" or smaller base cabinet drawers
- Trim-to-fit existing drawer
- Drop-in installation
- Natural maple construction with semi-gloss finish or walnut construction with satin finish
- Up to (9) compartments
- Shallow height sizes available
- Compatible with 4WD Wood Divider (Pg. 205) when using multiple inserts
- TSCA Title VI compliant

4WCT-WN-1SH/ 4WD-22SH-WN-1

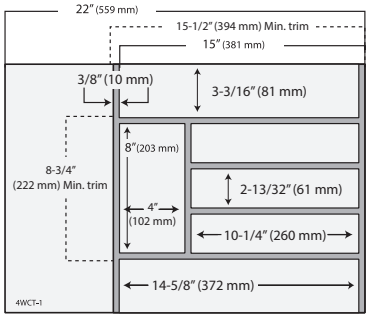

4WCT-1

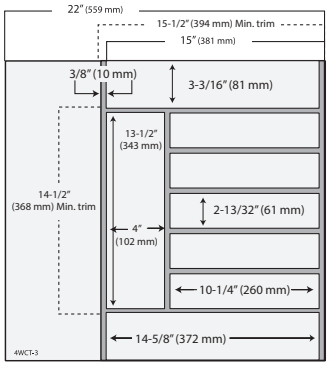

4WCT-3

Scan for video

Shallow Wood Cutlery Tray Insert

PRODUCT	DESCRIPTION	DIMS	FINISH	SLP
4WCT-WN-1SH	Shallow Height Cutlery Tray	15-1/8" (384 mm) W x 22" (559 mm) D x 2-3/8" (60 mm) H	Walnut	$166.75
4WCT-WN-3SH	Shallow Height Cutlery Tray	21-1/8" (537 mm) W x 22" (559 mm) D x 2-3/8" (60 mm) H	Walnut	$224.75
4WCT-1SH	Shallow Height Cutlery Tray	14-5/8" (371 mm) W x 22" (559 mm) D x 2-3/8" (60 mm) H	Maple	$83.40
4WCT-3SH	Shallow Height Cutlery Tray	20-5/8" (524 mm) W x 22" (559 mm) D x 2-3/8" (60 mm) H	Maple	$110.20
Wood Cutlery Tray Insert				
4WCT-1	Cutlery Tray	14-5/8" (372 mm) W x 22" (559 mm) D x 2-7/8" (73 mm) H	Maple	$94.25
4WCT-3	Cutlery Tray	20-5/8" (524 mm) W x 22" (559 mm) D x 2-7/8" (73 mm) H	Maple	$123.25

4WUT Series

Wood Utensil Tray Insert

Scan for video

- Designed for 36" or smaller base cabinet drawers
- Trim-to-fit existing drawer
- Drop-in installation
- Natural maple construction with semi-gloss finish or walnut construction with satin finish
- Up to (2) adjustable compartments
- Up to (12) static compartments
- Shallow height sizes available
- Compatible with 4WD Wood Divider (Pg. 205) when using multiple inserts
- TSCA Title VI compliant

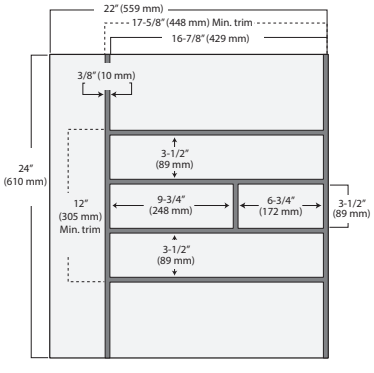

4WUT-3

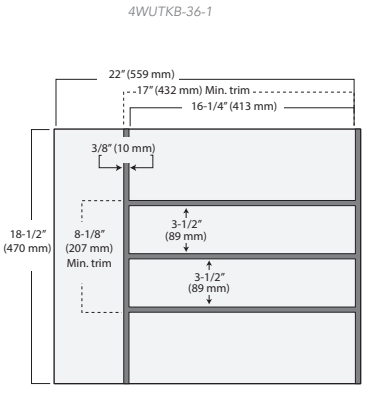

4WUT-1

4FWI-16SS-1
Foil Wrap Insert

REV-A-SHELF

4WUT-WN-1SH
Wood Utensil Tray Insert
(Walnut finish shown)

4WUT-36-1
Wide Utensil Drawer Insert

4WUTCT-36-1
Wide Utensil/Cutlery Drawer Insert

4WUTKB-36-1
Wide Knife Block/Utensil Drawer Insert

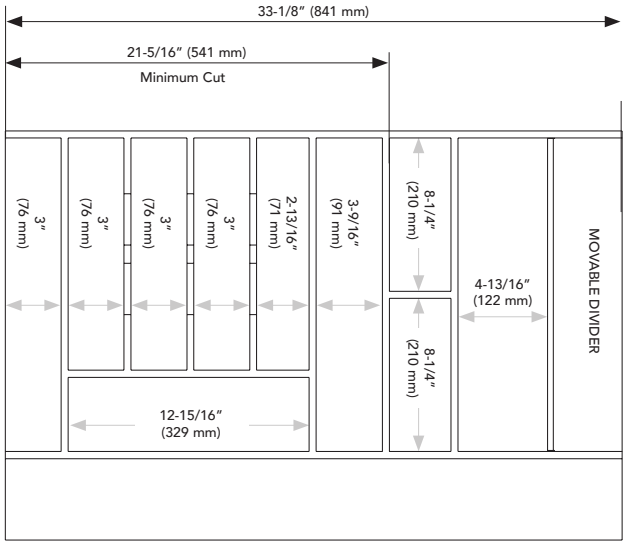

4WUTCT-36-1

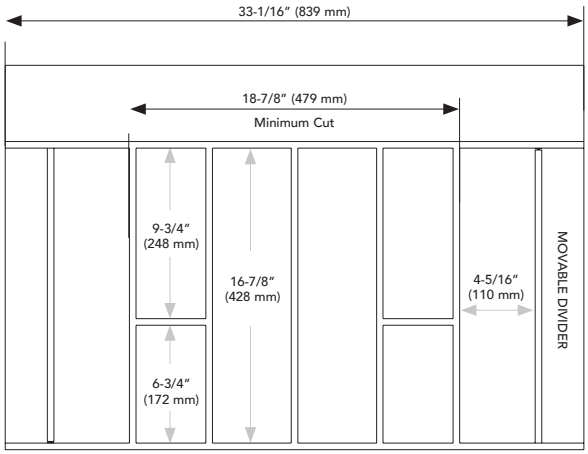

4WUT-36-1

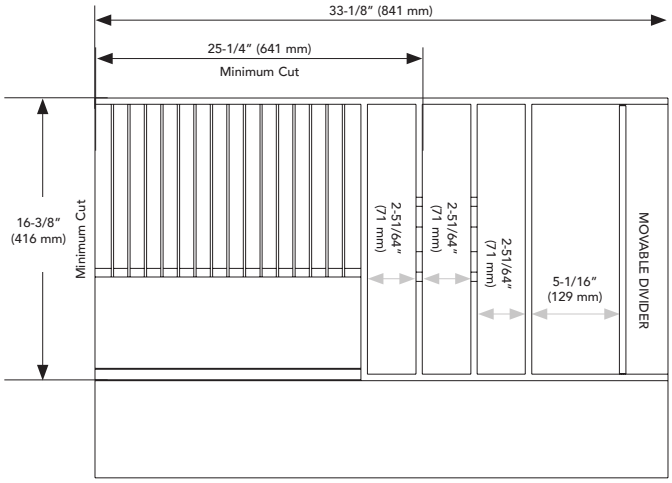

4WUTKB-36-1

PRODUCT	DESCRIPTION	DIMS	FINISH	SLP
Shallow Wood Utensil Tray Insert				
4WUT-WN-1SH	Shallow Height Utensil Tray	15-1/8" (384 mm) W x 22" (559 mm) D x 2-3/8" (60 mm) H	Walnut	$169.05
4WUT-WN-3SH	Shallow Height Utensil Tray	21-1/8" (537 mm) W x 22" (559 mm) D x 2-3/8" (60 mm) H	Walnut	$229.10
4WUT-1SH	Shallow Height Utensil Tray	18-1/2" (470 mm) W x 22" (559 mm) D x 2-3/8" (60 mm) H	Maple	$94.25
4WUT-3SH	Shallow Height Utensil Tray	24" (610 mm) W x 22" (559 mm) D x 2-3/8" (60 mm) H	Maple	$115.55
Wood Utensil Tray Insert				
4WUT-1	Utensil Tray	18-1/2" (470 mm) W x 22" (559 mm) D x 2-7/8" (73 mm) H	Maple	$100.05
4WUT-3	Utensil Tray	24" (610 mm) W x 22" (559 mm) D x 2-7/8" (73 mm) H	Maple	$129.05
Wide Drawer Inserts				
4WUT-36-1	Utensil Drawer Insert	33-1/8" (841 mm) W x 22" (559 mm) D x 2-7/8" (73 mm) H	Maple	$215.45
4WUTKB-36-1	Knife Block/Utensil Drawer Insert	33-1/8" (841 mm) W x 22" (559 mm) D x 2-7/8" (73 mm) H	Maple	$279.55
4WUTCT-36-1	Utensil/Cutlery Drawer Insert	33-1/8" (841 mm) W x 22" (559 mm) D x 2-7/8" (73 mm) H	Maple	$221.70
4WUT-36SH-1	Shallow Utensil Drawer Insert	33-1/8" (841 mm) W x 22" (559 mm) D x 2-3/8" (60 mm) H	Maple	$212.00
4WUTKB-36SH-1	Shallow Knife Block/Utensil Drawer Insert	33-1/8" (841 mm) W x 22" (559 mm) D x 2-3/8" (60 mm) H	Maple	$248.40
4WUTCT-36SH-1	Shallow Utensil/Cutlery Drawer Insert	33-1/8" (841 mm) W x 22" (559 mm) D x 2-3/8" (60 mm) H	Maple	$216.05
Accessories				
4FWI-16SS-1	16" Foil Wrap Insert for 4WUT	3-7/16" (87 mm) W x 16" (406 mm) D x 2-5/8" (67 mm) H	Stainless Steel	$38.40

4WCT Series

Right-Fit Cutlery Tray Insert

NEW!

- Designed for 15", 18", 21", and 24" base cabinet drawers
- 2-3/8" height accommodates shallow drawers
- Easy drop-in installation with no tools or trimming required for 1.5" face frame cabinets with 5/8" drawer sides
- Natural maple construction with a semi-gloss finish
- Features up to (9) compartments
- Compatible with 4FWI Foil Wrap
- TSCA Title VI Compliant

4WCT-18SH-1

4WCT-21SH-1
Right-Fit Cutlery Tray

Right-Fit Cutery Drawer Insert

PRODUCT	DESCRIPTION	DIMS	FINISH	SLP
4WCT-15SH-1	Cutlery Insert	10-1/4" (261 mm) W x 19-1/2" (496 mm) D x 2-3/8" (60 mm) H	Maple	$70.35
4WCT-18SH-1	Cutlery Insert	13-7/32" (337 mm) W x 19-1/2" (496 mm) D x 2-3/8" (60 mm) H	Maple	$82.65
4WCT-21SH-1	Cutlery Insert	16-7/32" (412 mm) W x 19-1/2" (496 mm) D x 2-3/8" (60 mm) H	Maple	$97.45
4WCT-24SH-1	Cutlery Insert	19-1/4" (489 mm) W x 19-1/2" (496 mm) D x 2-3/8" (60 mm) H	Maple	$109.20

Right-Fit Utensil Tray Insert

4WUT Series

4WUT-18SH-1

NEW!

- Designed for 15", 18", 21", and 24" base cabinet drawers
- 2-3/8" height accommodates shallow drawers
- Easy drop-in installation with no tools or trimming required for 1.5" face frame cabinets with 5/8" drawer sides
- Natural maple construction with a semi-gloss finish
- Features up to (7) compartments
- Compatible with 4FWI Foil Wrap
- TSCA Title VI Compliant

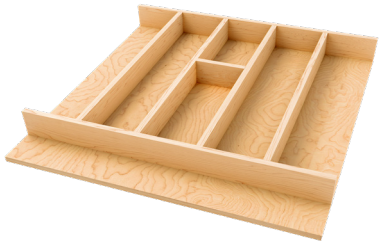

4WUT-24SH-1
Right-Fit Utensil Tray

Right-Fit Cutery Drawer Insert

PRODUCT	DESCRIPTION	DIMS	FINISH	SLP
4WUT-15SH-1	Cutlery Insert	10-1/4" (261 mm) W x 19-1/2" (496 mm) D x 2-3/8" (60 mm) H	Maple	$69.75
4WUT-18SH-1	Cutlery Insert	13-7/32" (337 mm) W x 19-1/2" (496 mm) D x 2-3/8" (60 mm) H	Maple	$78.45
4WUT-21SH-1	Cutlery Insert	16-7/32" (412 mm) W x 19-1/2" (496 mm) D x 2-3/8" (60 mm) H	Maple	$96.85
4WUT-24SH-1	Cutlery Insert	19-1/4" (489 mm) W x 19-1/2" (496 mm) D x 2-3/8" (60 mm) H	Maple	$105.70

4DP Series

Drawer Peg System

4DPS-WN-3021

- Designed for 42" or smaller base cabinet deep drawers
- Trim-to-fit existing drawer
- Drop-in installation
- Natural maple construction with semi-gloss finish, walnut construction with satin finish or natural maple construction with sound dampening vinyl covering
- Up to (120) pre-drilled peg holes
- (9), (12) or (16) matching, press-in pegs (maple and walnut only)
- Compatible with chrome accessories (sold separately)
- TSCA Title VI compliant

Think outside the box

Perfect for vanities

Mix and match accessories for the perfect drawer solution

4DPS-WN-2421
Drawer Peg System
(Walnut version shown)

4DPBG-3021-1
Drawer Peg Board
(Vinyl finish shown)

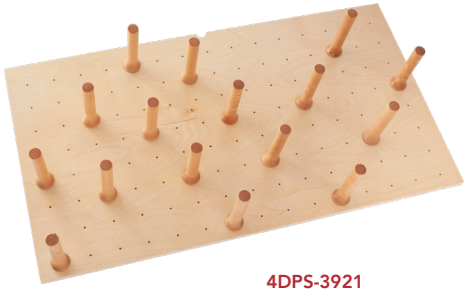

4DPS-3921
Drawer Peg System
(Maple finish shown)

4DPS-PEG-WN-4
(4) Wood Pegs
(Walnut finish shown)

DPS-PEG-4SS
(4) Stainless-Steel Pegs

5DCH-2-1-CR
(2) Stainless-Steel Containers

5DLD-1-CR
Lid Organizer

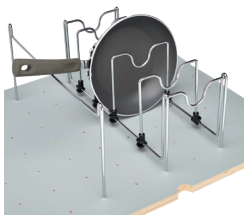

5DCD-1-CR
Pot & Pan Organizer

Drawer Peg System

PRODUCT	DESCRIPTION	DIMS	FINISH	SLP
4DPS-WN-2421	Peg System w/ (9) Pegs	24-1/4" (616 mm) W x 21-1/4" (540 mm) D x 6-5/8" (168 mm) H	Walnut	$340.75
4DPS-WN-3021	Peg System w/ (12) Pegs	30-1/4" (768 mm) W x 21-1/4" (540 mm) D x 6-5/8" (168 mm) H	Walnut	$421.95
4DPS-WN-3921	Peg System w/ (16) Pegs	39-1/4" (997 mm) W x 21-1/4" (540 mm) D x 6-5/8" (168 mm) H	Walnut	$525.65
4DPS-2421	Peg System w/ (9) Pegs	24-1/4" (616 mm) W x 21-1/4" (540 mm) D x 6-5/8" (168 mm) H	Maple	$137.75
4DPS-3021	Peg System w/ (12) Pegs	30-1/4" (768 mm) W x 21-1/4" (540 mm) D x 6-5/8" (168 mm) H	Maple	$164.55
4DPS-3921	Peg System w/ (16) Pegs	39-1/4" (997 mm) W x 21-1/4" (540 mm) D x 6-5/8" (168 mm) H	Maple	$209.55
Drawer Peg Board - No Pegs				
4DPBG-2421-1	Vinyl Drawer Peg Board	24-1/8" (613 mm) W x 21-1/4" (540 mm) D x 5/8" (16 mm) H	Vinyl	$123.25
4DPBG-3021-1	Vinyl Drawer Peg Board	30-1/8" (765 mm) W x 21-1/4" (540 mm) D x 5/8" (16 mm) H	Vinyl	$145.70
4DPBG-3921-1	Vinyl Drawer Peg Board	39-1/8" (994 mm) W x 21-1/4" (540 mm) D x 5/8" (16 mm) H	Vinyl	$189.95
4DPB-2421	Drawer Peg Board	24-1/4" (616 mm) W x 21-1/4" (540 mm) D x 5/8" (16 mm) H	Maple	$88.45
4DPB-3021	Drawer Peg Board	30-1/4" (769 mm) W x 21-1/4" (540 mm) D x 5/8" (16 mm) H	Maple	$108.75
4DPB-3921	Drawer Peg Board	39-1/4" (997 mm) W x 21-1/4" (540 mm) D x 5/8" (16 mm) H	Maple	$129.05
Accessories				
4DPS-PEG-4	(4) Maple Pegs	1-5/8" (41 mm) W x 1-5/8" (41 mm) D x 6-1/2" (165 mm) H	Maple	$10.90
4DPS-PEG-WN-4	(4) Walnut Pegs	1-5/8" (41 mm) W x 1-5/8" (41 mm) D x 6-1/2" (165 mm) H	Walnut	$23.05
DPS-PEG-4SS	(4) Stainless-Steel Pegs	1-1/4" (32 mm) W x 1-1/4" (32 mm) D x 6" (153 mm) H	Stainless Steel	$23.95
5DCH-2-1-CR	(2) Stainless-Steel Containers	6-1/2" (165 mm) W x 10-1/4" (260 mm) D x 6-1/2" (165 mm) H	Stainless Steel	$56.55
5DLD-1-CR	Lid Organizer	5-1/4" (133 mm) W x 16-7/8" (429 mm) D x 5-3/8" (137 mm) H	Chrome	$33.35
5DCD-1-CR	Pot/Pan Organizer	7-3/4" (197 mm) W x 15-1/4" (387 mm) D x 7-5/8" (194 mm) H	Chrome	$42.05

4SDI Series

Wood Spice Drawer Insert

- Designed for 36" or smaller base cabinet drawers
- Trim-to-fit existing drawer
- Drop-in installation
- Natural maple construction with semi-gloss finish or walnut construction with satin finish
- (1) rear compartment and up to (3) tiers
- Compatible with 4WD Wood Divider (PPg. 205) when using multiple inserts
- TSCA Title VI compliant

4SDI-36-1

Scan for video

4SDI-WN-18-1
Wood Spice Drawer Insert
(Walnut finish shown)

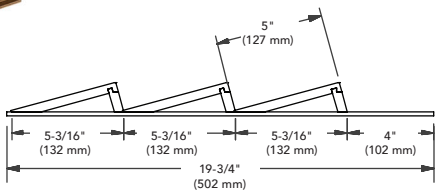

PRODUCT	DESCRIPTION	DIMS	FINISH	SLP
Wood Spice Drawer Insert				
4SDI-WN-18-1	Spice Drawer Insert	16" (407 mm) W x 19-3/4" (502 mm) D x 1-9/16" (39 mm) H	Walnut	$126.15
4SDI-WN-24-1	Spice Drawer Insert	22" (559 mm) W x 19-3/4" (502 mm) D x 1-9/16" (39 mm) H	Walnut	$163.85
4SDI-18	Spice Drawer Insert	16" (407 mm) W x 19-3/4" (502 mm) D x 1-9/16" (39 mm) H	Maple	$98.60
4SDI-24	Spice Drawer Insert	22" (559 mm) W x 19-3/4" (502 mm) D x 1-9/16" (39 mm) H	Maple	$133.40
Wide Spice Drawer Insert				
4SDI-36-1	Spice Drawer Insert	33-1/8" (841 mm) W x 19-3/4" (502 mm) D x 1-3/4" (44 mm) H	Maple	$193.55

Wood K-Cup Drawer Insert

4CDI Series

4CDI-18-KCUP-1

- Designed for 18" and 24" base cabinet drawers
- Trim-to-fit existing drawer
- Drop-in installation
- Natural maple construction with semi-gloss finish
- Up to (4) compartments and (5) tiers that hold up to (30) K-Cups
- Compatible with 4WD Wood Divider (Pg. 205) when using multiple inserts
- TSCA Title VI compliant

4CDI-24-KCUP-1
Wood K-CUP Drawer Insert
(24" version shown)

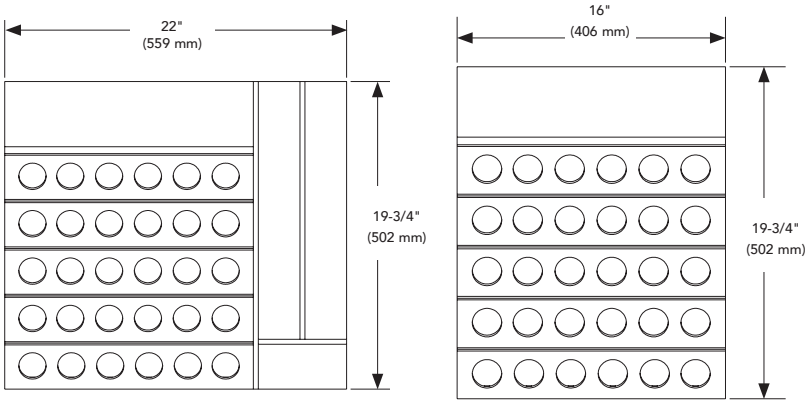

4CDI-24-KCUP-1 4CDI-18-KCUP-1

Scan for video

Wood K-Cup Drawer Insert

PRODUCT	DESCRIPTION	DIMS	FINISH	SLP
4CDI-18-KCUP-1	K-Cup Tray Insert	16" (406 mm) W x 19-3/4" (502 mm) D x 2-3/8" (60 mm) H	Maple	$123.25
4CDI-24-KCUP-1	K-Cup Tray Insert	22" (559 mm) W x 19-3/4" (502 mm) D x 2-3/8" (60 mm) H	Maple	$146.45

4WDKB Series

Double Knife Block Insert

- Designed for 18-1/2" or smaller base cabinet drawers
- Trim-to-fit existing drawer
- Drop-in installation
- Natural maple construction with semi-gloss finish or walnut construction with satin finish
- (1) compartment and (2) tiers that include up to (55) knife slots
- Compatible with 4WD Wood Divider (Pg. 205) when using multiple inserts
- TSCA Title VI compliant

Scan for video

4WDKB-1

4WDKB-WN-1
Wood Double Knife Block
(Walnut finish shown)

Wood Double Knife Block Insert

PRODUCT	DESCRIPTION	DIMS	FINISH	SLP
4WDKB-WN-1	Double Knife Block Insert	18-1/2" (470 mm) W x 22" (559 mm) D x 2" (51 mm) H	Walnut	$420.50
4WDKB-1	Double Knife Block Insert	18-1/2" (470 mm) W x 22" (559 mm) D x 2" (51 mm) H	Maple	$155.15

LD-4CT Series

Adjustable Wood Drawer Organizer

- Designed for 15" and 21" base cabinet drawers
- Fits into existing drawer
- Drop-in installation
- Maple construction with semi-gloss clear finish
- Up to (13) dividers
- Customizable, press-in clips: 15" includes (18), 21" includes (26)
- TSCA Title VI compliant

LD-4CT15-1

Wood Drawer Organizer

PRODUCT	DESCRIPTION		FINISH	SLP
LD-4CT15-1	Drawer Organizer	9-7/8" (251 mm) W x 19-1/8" (486 mm) D x 2-1/2" (64 mm) H	Maple	$55.10
LD-4CT21-1	Drawer Organizer	15-3/8" (391 mm) W x 19-1/8" (486 mm) D x 2-1/2" (64 mm) H	Maple	$75.40

Wood Knife Block Insert

4WKB Series

- Designed for 18-1/2" or smaller base cabinet drawers
- Trim-to-fit existing drawer
- Drop-in installation
- Natural maple construction with semi-gloss finish
- (1) compartment and up to (19) knife slots
- Compatible with 4WD Wood Divider (Pg. 205) when using multiple inserts
- TSCA Title VI compliant

Wood Knife Block Insert

PRODUCT	DESCRIPTION	DIMS	FINISH	SLP
4WKB-1	Knife Block Insert	18-1/2" (470 mm) W x 22" (559 mm) D x 2-3/8" (60 mm) H	Maple	$139.20

Wood Drawer Divider

4WD Series

4WD-22-1

- Designed for 22" depth or smaller base cabinet drawers
- Trim-to-fit existing drawer
- Natural maple construction with semi-gloss finish or walnut construction with satin finish
- 2-3/8" shallow H or 2-7/8" H
- Compatible with 4WCT, 4WUT, 4WKB and 4SDI Inserts
- Easily combine various drawer inserts into wider drawer
- TSCA Title VI compliant

Shallow Height Wood Drawer Divider

PRODUCT	DESCRIPTION	DIMS	FINISH	SLP
4WD-22SH-WN-1	Shallow Height Divider	1/2" (13 mm) W x 22" (559 mm) D x 2-3/8" (60 mm) H	Walnut	$36.25
4WD-22SH-1	Shallow Height Divider	1/2" (13 mm) W x 22" (559 mm) D x 2-3/8" (60 mm) H	Maple	$15.95

Wood Drawer Divider

4WD-22-1	Divider	1/2" (13 mm) W x 22" (559 mm) D x 2-7/8" (73 mm) H	Maple	$15.95

CT/GCT Series Polymer Cutlery Tray

- Designed for 24" or smaller base cabinet drawers
- Trim-to-fit existing drawer
- Drop-in installation
- Polystyrene construction with textured finish in white or almond, or glossy finish in white or metallic silver
- Up to (7) compartments
- Great for outdoor applications

CT-2W-52

CT-1A-52
Polymer Cutlery Tray
(Almond finish shown)

GCT-2S-52
Polymer Cutlery Tray
(Metallic Silver finish shown)

CT-4W-52
Polymer Cutlery Tray
(White finish shown)

NOTE: Trays can be ordered trimmed to your specifications for an additional charge. Ships with a clear protective coating; remove before use.

Polymer* - Insert (W) for White and (A) for Almond
Glossy Polymer* - Insert (W) for White and (S) For Metallic Silver.

Polymer Cutlery Tray

PRODUCT	DESCRIPTION	DIMS	MIN TRIM	FINISH	SLP
CT-1*-52	Cutlery Tray	11-1/2" (293 mm) W x 21-1/4" (540 mm) D x 2-3/8" (61 mm) H	8-5/8" (219 mm) W x 17-3/4" (451 mm) D	Polymer	$25.40
CT-2*-52	Cutlery Tray	14-1/4" (362 mm) W x 21-1/4" (540 mm) D x 2-3/8" (61 mm) H	11-5/8" (296 mm) W x 17-3/4" (451 mm) D	Polymer	$25.40
CT-3*-52	Cutlery Tray	17-1/2" (445 mm) W x 21-1/4" (540 mm) D x 2-3/8" (61 mm) H	14-3/4" (375 mm) W x 17-3/4" (451 mm) D	Polymer	$28.25
CT-4*-52	Cutlery Tray	21-7/8" (556 mm) W x 21-1/4" (540 mm) D x 2-3/8" (61 mm) H	18-3/4" (467 mm) W x 17-3/4" (451 mm) D	Polymer	$32.65
CT-1*-10	(10) Cutlery Trays	11-1/2" (293 mm) W x 21-1/4" (540 mm) D x 2-3/8" (61 mm) H	8-5/8" (219 mm) W x 17-3/4" (451 mm) D	Polymer	$16.70 ea.
CT-2*-20	(20) Cutlery Trays	14-1/4" (362 mm) W x 21-1/4" (540 mm) D x 2-3/8" (61 mm) H	11-5/8" (296 mm) W x 17-3/4" (451 mm) D	Polymer	$16.70 ea.
CT-3*-20	(20) Cutlery Trays	17-1/2" (445 mm) W x 21-1/4" (540 mm) D x 2-3/8" (61 mm) H	14-3/4" (375 mm) W x 17-3/4" (451 mm) D	Polymer	$18.85 ea.
CT-4*-10	(10) Cutlery Trays	21-7/8" (556 mm) W x 21-1/4" (540 mm) D x 2-3/8" (61 mm) H	18-3/4" (467 mm) W x 17-3/4" (451 mm) D	Polymer	$25.40 ea.
Glossy Polymer Cutlery Tray					
GCT-1*-52	Cutlery Tray	11-1/2" (293 mm) W x 21-1/4" (540 mm) D x 2-3/8" (61 mm) H	8-5/8" (219 mm) W x 17-3/4" (451 mm) D	Polymer	$24.65
GCT-2*-52	Cutlery Tray	14-1/4" (362 mm) W x 21-1/4" (540 mm) D x 2-3/8" (61 mm) H	11-5/8" (296 mm) W x 17-3/4" (451 mm) D	Polymer	$26.10
GCT-3*-52	Cutlery Tray	17-1/2" (445 mm) W x 21-1/4" (540 mm) D x 2-3/8" (61 mm) H	14-3/4" (375 mm) W x 17-3/4" (451 mm) D	Polymer	$27.85
GCT-4*-52	Cutlery Tray	21-7/8" (556 mm) W x 21-1/4" (540 mm) D x 2-3/8" (61 mm) H	18-3/4" (467 mm) W x 17-3/4" (451 mm) D	Polymer	$33.50
GCT-1*-10	(10) Cutlery Trays	11-1/2" (293 mm) W x 21-1/4" (540 mm) D x 2-3/8" (61 mm) H	8-5/8" (219 mm) W x 17-3/4" (451 mm) D	Polymer	$17.40 ea.
GCT-2*-20	(20) Cutlery Trays	14-1/4" (362 mm) W x 21-1/4" (540 mm) D x 2-3/8" (61 mm) H	11-5/8" (296 mm) W x 17-3/4" (451 mm) D	Polymer	$17.85 ea.
GCT-3*-20	(20) Cutlery Trays	17-1/2" (445 mm) W x 21-1/4" (540 mm) D x 2-3/8" (61 mm) H	14-3/4" (375 mm) W x 17-3/4" (451 mm) D	Polymer	$18.85 ea.
GCT-4*-10	(10) Cutlery Trays	21-7/8" (556 mm) W x 21-1/4" (540 mm) D x 2-3/8" (61 mm) H	18-3/4" (467 mm) W x 17-3/4" (451 mm) D	Polymer	$19.30 ea.

Polymer Utensil Tray

UT/GUT Series

GUT-18A-52

- Designed for 24" or smaller base cabinet drawers
- Trim-to-fit existing drawer
- Drop-in installation
- Polystyrene construction with textured or glossy finish in white, or textured finish in almond
- Up to (4) compartments
- Great for outdoor applications

UT-10A-52
Polymer Utensil Tray
(Almond finish shown)

UT-12A-52
Polymer Utensil Tray
(Almond finish shown)

GUT-15W-52
Polymer Utensil Tray
(White finish shown)

NOTE: Trays can be ordered trimmed to your specifications for an additional charge. Ships with a clear protective coating; remove before use.

* - Insert (W) for White, (A) for Almond. Add "G" to the begining of the product number to designate Glossy finish.

PRODUCT	DESCRIPTION	DIMS	MIN TRIM	FINISH	SLP
Polymer Utensil Tray					
UT-10*-52	Utensil Tray	11-1/2" (293 mm) W x 21-1/4" (540 mm) D x 2-3/8" (61 mm) H	8-5/8" (219 mm) W x 17-3/4" (451 mm) D	Polymer	$31.20
UT-12*-52	Utensil Tray	14-1/4" (362 mm) W x 21-1/4" (540 mm) D x 2-3/8" (61 mm) H	11-5/8" (296 mm) W x 17-3/4" (451 mm) D	Polymer	$32.65
UT-15*-52	Utensil Tray	17-1/2" (445 mm) W x 21-1/4" (540 mm) D x 2-3/8" (61 mm) H	14-3/4" (375 mm) W x 17-3/4" (451 mm) D	Polymer	$34.05
UT-18*-52	Utensil Tray	21-7/8" (556 mm) W x 21-1/4" (540 mm) D x 2-3/8" (61 mm) H	18-3/8" (467 mm) W x 17-3/4" (451 mm) D	Polymer	$35.50
Polymer Utensil Trays					
UT-10*-10	(10) Utensil Trays	11-1/2" (293 mm) W x 21-1/4" (540 mm) D x 2-3/8" (61 mm) H	8-5/8" (219 mm) W x 17-3/4" (451 mm) D	Polymer	$18.85 ea.
UT-12*-20	(20) Utensil Trays	14-1/4" (362 mm) W x 21-1/4" (540 mm) D x 2-3/8" (61 mm) H	11-5/8" (296 mm) W x 17-3/4" (451 mm) D	Polymer	$19.55 ea.
UT-15*-20	(20) Utensil Trays	17-1/2" (445 mm) W x 21-1/4" (540 mm) D x 2-3/8" (61 mm) H	14-3/4" (375 mm) W x 17-3/4" (451 mm) D	Polymer	$20.30 ea.
UT-18*-10	(10) Utensil Trays	21-7/8" (556 mm) W x 21-1/4" (540 mm) D x 2-3/8" (61 mm) H	18-3/8" (467 mm) W x 17-3/4" (451 mm) D	Polymer	$22.45 ea.

ST50 Series

Polymer Spice Tray

ST50-21A-52

- Designed for 48" or smaller base cabinet drawers
- Trim-to-fit existing drawer
- Drop-in installation
- Polystyrene construction with textured finish, almond or white
- Up to (4) tiers
- Great for outdoor applications

NOTE: Trays can be ordered trimmed to your specifications for an additional charge. Ships with a clear protective coating; remove before use.

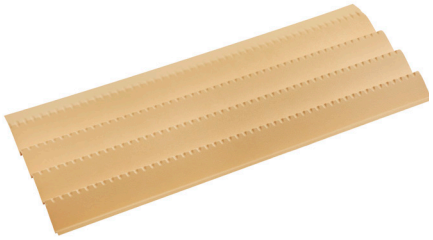

ST50-21A-52
Polymer Spice Tray
(Almond finish shown)

* - Insert (W) for White, (A) for Almond

Polymer Spice Tray				
PRODUCT	DESCRIPTION	DIMS	FINISH	SLP
ST50-21*-52	Spice Tray	50" (1270 mm) W x 20" (508 mm) D x 1-7/8" (48 mm) H	Polymer	$73.95
(12) Polymer Spice Trays				
ST50-21*-12	Spice Trays	50" (1270 mm) W x 20" (508 mm) D x 1-7/8" (48 mm) H	Polymer	$60.15 ea.

Bread Drawer Cover

BDC Series

BDC-200-20

- Designed for 24" or smaller base cabinet drawers
- Trim-to-fit existing drawer
- Easy installation
- Textured polymer available in almond, translucent or white
- Molded-in handle and rear stop
- Includes sliding rails and mounting screws

BDC24-11
Polymer Bread Drawer Cover
(White finish shown)

BDC24-15
Polymer Bread Drawer Cover
(Almond finish shown)

NOTE: Cover is textured to hide scratches. Product available in three colors. These bread drawer covers can be ordered custom cut to your drawer specifications.

** - Insert (11) for White, (15) for Almond and (20) for Translucent (for an additional cost).

PRODUCT	DESCRIPTION	DIMS	MIN TRIM	FINISH	SLP
Polymer Bread Drawer Cover					
BDC-200-**	BDC Kit	16-3/4" (426 mm) W x 21-3/4" (553 mm) D x 3/8" (10 mm) H	11-5/8" (295 mm) x Any Depth	Polymer	$43.50
BDC-200-20	BDC Kit–Translucent w/ Clear Rails	16-3/4" (426 mm) W x 21-3/4" (553 mm) D x 3/8" (10 mm) H	11-5/8" (295 mm) x Any Depth	Polymer	$52.20
Polymer Bread Drawer Cover					
BDC24-**	BDC Kit	20-3/8" (518 mm) W x 21-3/4" (553 mm) D x 3/8" (10 mm) H	16-1/16" (408 mm) x Any Depth	Polymer	$44.10
BDC24-20	BDC Kit–Translucent w/ Clear Rails	20-3/8" (518 mm) W x 21-3/4" (553 mm) D x 3/8" (10 mm) H	16-1/16" (408 mm) x Any Depth	Polymer	$73.95
F-Channel Rail Kit					
CDR-21W-A	Extra White Rails			White	$29.60
CDR-21A-A	Extra Almond Rails			Almond	$29.60
CDR-21C-A	Extra Clear Rails			Clear	$37.30

RAS-FDSM Series Pullout File Drawer System

- Designed for 18″ base cabinet with 1-1/2″ face frame
- Complete drawer system
- Easy installation
- Pre-assembled door-mount brackets
- Chrome-plated wire construction
- Full-extension, ball-bearing slides
- Stores either letter or legal sizes
- Mounts to cabinet side wall

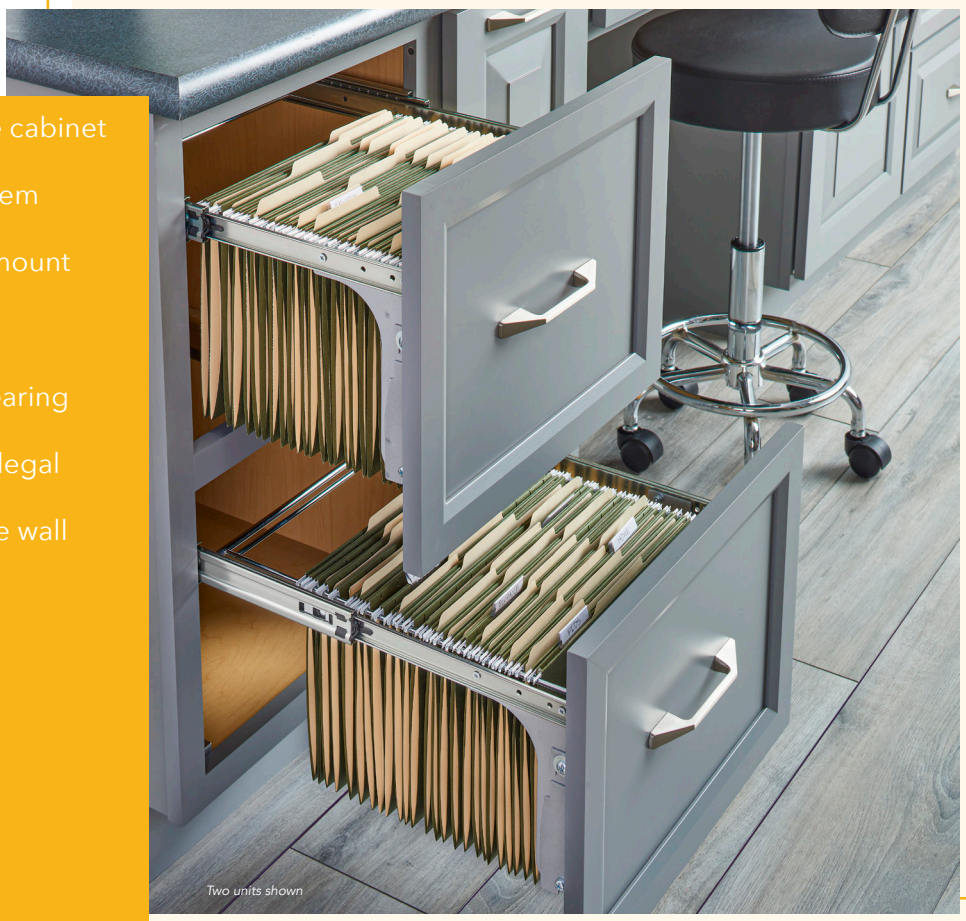

RAS-FDSM-DM15-1

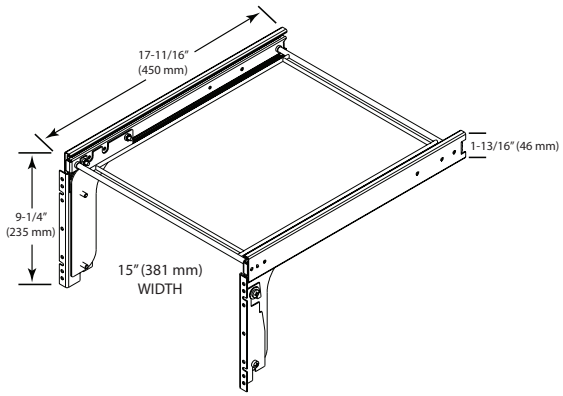

Pullout File Drawer System

PRODUCT	DESCRIPTION	DIMS	MCO	CAB	FINISH	SLP
RAS-FDSM-DM15-1	Drawer System	15″ (381 mm) W x 17-3/4″ (451 mm) D x 10-1/2″ (267 mm) H	15″ (381 mm)	B18	Polymer	$85.55

Two-Tier File Drawer System

RAS-FD Series

RAS-FD-KIT
Pullout File Drawer System

- Designed for a standard height base 18″ drawer/door cabinet
- Full-extension, ball-bearing slides
- Heavy duty chrome plated rails
- Can store both letter and legal folders
- Door-mounting brackets (sold separately)

Two-Tier File Drawer System

PRODUCT	DESCRIPTION	DIMS	MCO	CAB	FINISH	PRICE
RAS-FD-KIT	File Drawer System	14-3/4″ (375 mm) W x 19-3/4 - 24″ (502 - 610 mm) D x 22-5/8″ (575 mm) H	14-1/2″ (368 mm) - FF 14-7/8″ (378 mm) - FL	B18	Chrome	$143.55
RV-DM-FDKIT	(2) Door Mounting Kit				Silver	$58.00

File Drawer System

RAS-**FD Series

RAS-SMFD-52

- Designed for 18″ and 21″ base cabinet drawers
- Fits into existing drawer
- Drop-in installation
- Black, powder-coated wire construction
- RAS-LGFD includes T-rod connectors to store legal and letter sizes

File Drawer System

PRODUCT	DESCRIPTION	DIMS	MCO	CAB	FINISH	PRICE
RAS-SMFD-52	File System-Letter	13″ (331 mm) W x 19-1/4″ (489 mm) D x 9-3/4″ (248 mm) H	15″ (381 mm)	B18	Black	$30.45
RAS-LGFD-52	File System-Legal	15-7/8″ (404 mm) W x 19-1/4″ (489 mm) D x 9-3/4″ (248 mm) H	18″ (457 mm)	B21	Black	$31.90

PROP 65 WARNING FOR CALIFORNIA RESIDENTS

WARNING: These products can expose you to chemicals such as formaldehyde, lead or styrene, which are known to the State of California to cause cancer and birth defects or other reproductive harm. For more information go to www.P65Warnings.ca.gov

REV-A-SHELF®

WALL

How do you make more room in a confined space like a wall cabinet? How do you use all the space in your cabinet when you can't reach the shelves? Add Rev-A-Shelf® wall accessories. Our wire, polymer and wood spice racks, storage shelves and pullouts expand your limited space. And now, everyone can reach the shelves in your wall cabinet with our revolutionary Pull Down Shelving System. This popular kitchen convenience is one of the many innovative products introduced as Rev-A-Shelf® continues to change the way you think about cabinet organization!

Innovation through ***Organization***™

5WU Series

Upright Wall Pullout

5WU2-3N1-1 and 5WU2-9N3-1

NEW!

- Designed for 9″ and larger wall cabinets
- Fits inside cabinet depths of 10-¾″
- Single or two-tier options
- Available in three widths: 3″, 5″ or 9″
- (1) or (2) solid bottom shelves, natural compact melamine
- Chrome-plated round wire
- Modular, multiple units can be combined for a complete storage system
- 7/8-extension, ball-bearing slides
- Mounts to cabinet floor
- TSCA Title VI compliant

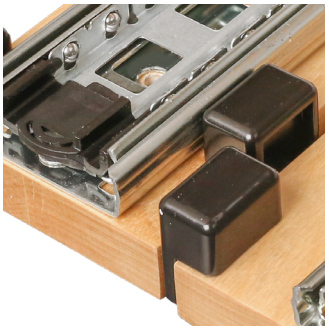

Seamlessly nest Uprights together to make the most of available space

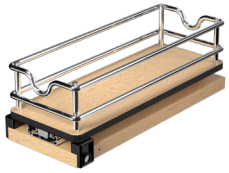

5WU1-5W1-1
5" Upright Wall Pullout

5WU2-5W1-1
5" Two-Tier Upright Wall Pullout

5WU2-9W2-1
9" Two-Tier Upright Wall Pullout

5WU2-3N1-1
3" Two-Tier Upright Wall Pullout

5WU2-9N3-1
9" Two-Tier Upright Wall Pullout

Maximize your cabinet storage space

Unlimited storage options

Upwright Wall Pullout

PRODUCT	DESCRIPTION	DIMS	MCO	CAB	FINISH	SLP
5WU1-5W1-1	5" Upright Wall Pullout	4-13/32" (113 mm) W x 10-19/32" (270 mm) D x 3-9/16" (91 mm) H	6" (153 mm)	W9	Maple	$52.90
5WU2-5W1-1	5" Two-Tier Upright Wall Pullout	4-13/32" (113 mm) W x 10-19/32" (270 mm) D x 10-1/2" (267 mm) H	6" (153 mm)	W9	Maple	$79.00
5WU2-9W2-1	9" Two-Tier Upright Wall Pullout	8-19/32" (219 mm) W x 10-19/32" (270 mm) D x 10-1/2" (267 mm) H	9" (229 mm)	W12	Maple	$151.55
Narrow Upwright Wall Pullout						
5WU2-3N1-1	3" Two-Tier Narrow Upright Wall Pullout	3-1/32" (77 mm) W x 10-19/32" (270 mm) D x 10-1/2" (267 mm) H	6" (153 mm)	W9	Maple	$64.50
5WU2-9N3-1	9" Two-Tier Narrow Upright Wall Pullout	8-19/32" (219 mm) W x 10-19/32" (270 mm) D x 10-1/2" (267 mm) H	9" (229 mm)	W12	Maple	$158.80

448 Series

Wall Cabinet Pullout

448-BBSCWC-6C

- Designed for 9″ and 12″ wall cabinets
- Natural maple construction with semi-gloss finish
- Up to (5) shelves with chrome wire accents
- Full-extension, ball-bearing slides w/ soft-close
- Mounts to cabinet floor and door
- Patented door-mount brackets with 5″ of adjustability and micro-trim adjuster (US Patent No. 8,388,076)
- Adjustable rub bushings
- Non soft-close available
- TSCA Title VI compliant

Scan for video

NOTE: See page 136 for base cabinet version

Micro-Adjustment screw for precise door alignment

Adjustable threaded rub bushings included for custom applications

448-BBSCWC-8C
Soft-Close Wall Cabinet Pullout
(8" version shown)

448-WC-5C
Wall Cabinet Pullout
(5" version shown)

448-BBSCWC-6C
Full Access Wall Cabinet Pullout
w/ Ball-Bearing Soft-Close
(6" version shown)

448-BBSCWC-9C
Full Access Wall Cabinet Pullout
w/ Ball-Bearing Soft-Close
(9" version shown)

448-BBSCWC36-5C
Face Frame 36" Tall
Wall Cabinet Pullout
(5" version shown)

448-BBSCWC36-8C
Face Frame 36" Tall
Wall Cabinet Pullout
(8" version shown)

Full Access Wall Cabinet Pullout w/ Ball-Bearing Soft-Close

PRODUCT	DESCRIPTION	DIMS	MCO	CAB	FINISH	SLP
448-BBSCWC-6C	Wall Cabinet Pullout	6-1/2" (166 mm) W x 10-3/4" (274 mm) D x 26-5/32 - 27-27/32" (665 - 708 mm) H	7-1/2" (191 mm)	FLW9	Maple	$248.65
448-BBSCWC-9C	Wall Cabinet Pullout	9-1/2" (242 mm) W x 10-3/4" (274 mm) D x 26-5/32 - 27-27/32" (665 - 708 mm) H	10-1/2" (267 mm)	FLW12	Maple	$289.25
Face Frame Wall Cabinet Pullout w/ Ball-Bearing Soft-Close for 36" and Taller Wall cabinets						
448-BBSCWC36-5C	Wall Cabinet Pullout	5" (127 mm) W x 10-3/4" (274 mm) D x 32-5/32 - 33-27/32" (817 - 860 mm) H	5-1/2" (140 mm)	W9	Maple	$272.60
448-BBSCWC36-8C	Wall Cabinet Pullout	8" (204 mm) W x 10-3/4" (274 mm) D x 32-5/32 - 33-27/32" (817 - 860 mm) H	8-1/2" (216 mm)	W12	Maple	$317.55
Face Frame Wall Cabinet Pullout w/ Ball-Bearing Soft-Close for 30" and Taller Wall cabinets						
448-BBSCWC-5C	Wall Pullout for 9"	5" (127 mm) W x 10-3/4" (274 mm) D x 26-5/32 - 27-27/32" (665 - 708 mm) H	5-1/2" (140 mm)	W9	Maple	$218.95
448-BBSCWC-8C	Wall Pullout for 12"	8" (204 mm) W x 10-3/4" (274 mm) D x 26-5/32 - 27-27/32" (665 - 708 mm) H	8-1/2" (216 mm)	W12	Maple	$262.45
Face Frame Wall Cabinet Pullout						
448-WC-5C	Wall Pullout for 9"	5" (127 mm) W x 10-3/4" (274 mm) D x 26-1/4 - 27-27/32" (667 - 708 mm) H	5-1/2" (140 mm)	W9	Maple	$187.80
448-WC-8C	Wall Pullout for 12"	8" (204 mm) W x 10-3/4" (274 mm) D x 26-1/4 - 27-27/32" (667 - 708 mm) H	8-1/2" (216 mm)	W12	Maple	$223.30
448-HP-523C	Wood Hood Pullout	5" (127 mm) W x 10-3/4" (274 mm) D x 23 - 24-11/16" (585 - 627 mm) H	5-1/2" (140 mm)	N/A	Maple	$218.25

5708 Series

Above Appliance Pullout

- Designed for 24" deep wall cabinets
- Chrome round wire construction
- (1) wire bottom shelf
- Full-extension, ball-bearing slides
- 45 lb. weight rating
- Universal mounting, non-handed
- Mounts to cabinet door, floor and side walls
- Pulls out of cabinet as door opens
- Adjustable door-mount brackets

5708-15CR

Top

Scan for video

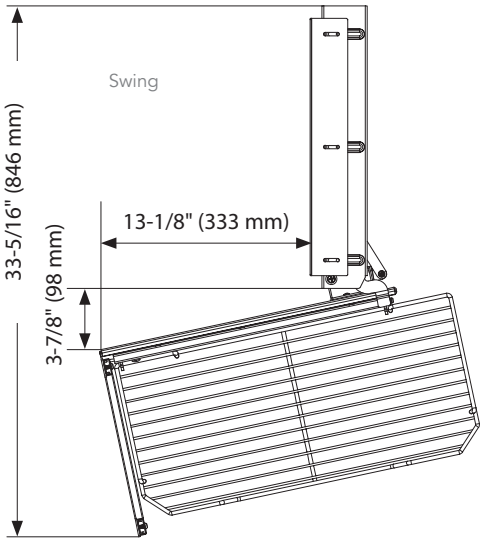

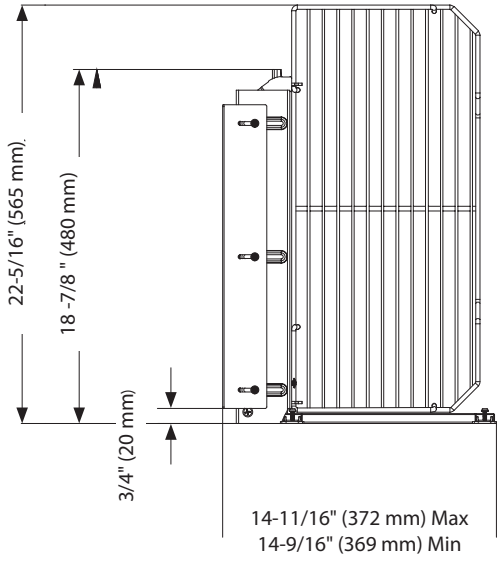

Above Appliance Pullout

PRODUCT	DESCRIPTION	DIMS	MCO	CAB	FINISH	SLP
5708-15CR	Above Appliance Pullout	14 - 15" (356 - 381 mm) W x 21-3/8" (544 mm) D x 15" (381 mm) H	14-3/4" (375 mm)	T33 Butt/ T36	Chrome	$577.10

U-Shaped Tray Divider

596 Series

- Available in 10" height
- Chrome-plated round wire
- Mounts to cabinet floor
- Easy 4-screw installation
- Use multiple to create custom storage space

Chrome Wire U-Shaped Tray Organizer

PRODUCT	DESCRIPTION	DIMS	MCO	FINISH	SLP
596-10CR-52	U-Shaped Tray Divider	3" (77 mm) W x 11-7/8" (302 mm) D x 10" (254 mm) H	3-1/4" (83 mm)	Chrome	$21.75

Tray Divider w/ Clips

597 Series

- Available in 12" height
- Chrome-plated or powder-coated white round wire
- Mounts to cabinet floor and rear wall
- Includes (4) screw-in clips and fasteners each
- Use multiple to create custom storage space

White Wire Tray Divider

PRODUCT	DESCRIPTION	DIMS	FINISH	SLP
597-12-52	Tray Divider with Clips	3/4" (20 mm) W x 20" (508 mm) D x 12" (305 mm) H	White Wire	$13.80
(10) White Wire Tray Dividers				
597-12-10	(10) Tray Dividers with Clips	3/4" (20 mm) W x 20" (508 mm) D x 12" (305 mm) H	White Wire	$9.85 ea.
Chrome Wire Tray Divider				
597-12CR-52	Tray Divider with Clips	3/4" (20 mm) W x 20" (508 mm) D x 12" (305 mm) H	Chrome Wire	$15.25
(10) Chrome Wire Tray Dividers				
597-12CR-10	(10) Tray Dividers with Clips	3/4" (19 mm) W x 20" (508 mm) D x 12" (305 mm) H	Chrome Wire	$12.30 ea.

4SR Series

Door-Mount Spice Rack

- Designed for 15", 18" and 21" wall cabinets
- Natural maple construction with semi-gloss finish
- 4-screw installation
- (3) shelves with chrome wire accents
- Holds items up to 2-1/4" deep
- Mounts to cabinet door
- Patented adjustable door-mount brackets provide up to 5" of adjustability (US Patent No. 7,204,569)
- TSCA Title VI compliant

4SR-18

NOTE: Height between shelves is 8-5/8" (219 mm)

4SR-15
Spice Rack
(15" version shown)

4SR-21
Spice Rack
(21" version shown)

Door-Mount Spice Rack

PRODUCT	DESCRIPTION	DIMS	MCO	CAB	FINISH	SLP
4SR-15	Spice Rack	10-1/2" (267 mm) W x 3-1/8" (80 mm) D x 21-1/4" (540 mm) H	11-1/2" (292 mm)	W15	Maple	$84.10
4SR-18	Spice Rack	13-1/2" (343 mm) W x 3-1/8" (80 mm) D x 21-1/4" (540 mm) H	14-1/2" (368 mm)	W18	Maple	$94.95
4SR-21	Spice Rack	16-1/2" (420 mm) W x 3-1/8" (80 mm) D x 21-1/4" (540 mm) H	17-1/2" (445 mm)	W21	Maple	$105.85

Adjustable Door Mount Spice Rack

4ASR Series

- Designed for 15", 18" and 21" wall cabinets
- Natural maple construction with semi-gloss finish
- 6-screw installation
- (3) adjustable shelves with chrome wire accents
- (2) wood standards
- Holds items up to 2-1/4" deep
- Mounts to cabinet door
- Patented adjustable door-mount brackets provide up to 5" of adjustability (US Patent No. 7,204,569)
- TSCA Title VI compliant

4ASR-18

4ASR-15
Adjustable Spice Rack
(15" version shown)

4ASR-21
Adjustable Spice Rack
(21" version shown)

Adjustable Door-Mount Spice Rack

PRODUCT	DESCRIPTION		MCO	CAB	FINISH	SLP
4ASR-15	Adjustable Spice Rack	10-1/8" (257 mm) W x 4" (102 mm) D x 25" (635 mm) H	12" (305 mm)	W15	Maple	$129.05
4ASR-18	Adjustable Spice Rack	13-1/8" (333 mm) W x 4" (102 mm) D x 25" (635 mm) H	15" (381 mm)	W18	Maple	$151.55
4ASR-21	Adjustable Spice Rack	16-1/8" (410 mm) W x 4" (102 mm) D x 25" (635 mm) H	18" (457 mm)	W21	Maple	$172.55
Bulk Components						
4ASR-25STD-20	(20) Spice Rack Standards	25" (635 mm) H			Maple	$10.60
4ASR-31STD-20	(20) Spice Rack Standards	31" (787 mm) H			Maple	$12.90
4ASR-37STD-20	(20) Spice Rack Standards	37" (940 mm) H			Maple	$14.35
4ASR-15BIN-10	(10) Bins ONLY	10-1/8" (257 mm) W x 3-5/8" (92 mm) D x 3-5/8" (92 mm) H	12" (305 mm)	W15	Maple	$31.75
4ASR-18BIN-10	(10) Bins ONLY	13-1/8" (333 mm) W x 3-5/8" (92 mm) D x 3-5/8" (92 mm) H	15" (381 mm)	W18	Maple	$39.60
4ASR-21BIN-10	(10) Bins ONLY	16-1/8" (410 mm) W x 3-5/8" (92 mm) D x 3-5/8" (92 mm) H	18" (457 mm)	W21	Maple	$46.25

500 Series

Door-Mount Spice Rack

- Designed for 12", 15" and 18" wall cabinets
- Adjustable door-mounting brackets with 4" of adjustability (5365 only)
- Screw-in clips (565 only)
- White powder-coated wire or orion gray flat wire construction
- 4-screw installation
- (4) shelves w/ wire accents
- Wire shelves:
  - 2-3/8" deep
    bottom shelf is 4-1/8" deep
  - Orion gray shelves are 2-15/32" deep
- Holds items up to 2-1/4" deep
- Mounts to cabinet door

5365-10-FOG

Adjustable door-mounting brackets with 4" of adjustability (5365 only)

5365-08-FOG
Door-Mount Spice Rack
(Orion Gray finish shown)
4-1/16" (104 mm) between shelves

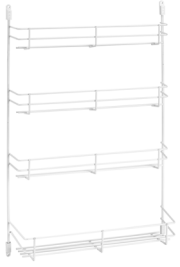

565-14-52
Door-Mount Spice Rack
(White finish shown)

Flat Wire Door-Mount Spice Rack

PRODUCT	DESCRIPTION	DIMS	MCO	CAB	FINISH	SLP
5365-08-FOG	Spice Rack	7-7/8" (200 mm) W x 2-15/32" (63 mm) D x 23-11/32" (593 mm) H	9" (229 mm) - FF 9" (229 mm) - FL	FLW12	Orion Gray	$149.35
5365-10-FOG	Spice Rack	10-5/8" (270 mm) W x 2-15/32" (63 mm) D x 23-11/32" (593 mm) H	12" (305 mm) - FF 12" (305 mm) - FL	FLW15	Orion Gray	$155.15
5365-14-FOG	Spice Rack	13-5/8" (346 mm) W x 2-15/32" (63 mm) D x 23-11/32" (593 mm) H	15" (381 mm) - FF 15" (381 mm) - FL	FLW18	Orion Gray	$160.95
Wire Door-Mount Spice Rack						
565-8-52	Spice Rack	7-7/8" (200 mm) W x 2-3/8 - 4-1/8" (60 - 105 mm) D x 21-3/8" (543 mm) H	9" (229 mm) - FF 9" (229 mm) - FL	W12	White	$50.75
565-10-52	Spice Rack	10-5/8" (270 mm) W x 2-3/8 - 4-1/8" (60 - 105 mm) D x 21-3/8" (543 mm) H	12" (305 mm) - FF 12" (305 mm) - FL	W15	White	$54.40
565-14-52	Spice Rack	13-5/8" (346 mm) W x 2-3/8 - 4-1/8" (60 - 105 mm) D x 21-3/8" (543 mm) H	15" (381 mm) - FF 15" (381 mm) - FL	W18	White	$56.55

Door-Mount Spice Tray

ST/6571 Series

6571-36-15-4

- Available in 36" or 72" extruded trays, almond or white
- Cut-to-size
- Components include end caps, screws and adhesive (each sold separately)

NOTE: 6571-Extruded cut-to-size trays, components must be ordered separately.

**Insert 11 for White finish or 15 for Almond finish

Door-Mount Spice Tray

PRODUCT	DESCRIPTION	DIMS	FINISH	SLP
6571-36-**-4	(20) Trays	36" (914 mm) W x 2-7/16" (62 mm) D x 3-15/16" (100 mm) H	Polymer	$13.80
6571-72-**-4	(20) Trays	72" (1829 mm) W x 2-7/16" (62 mm) D x 3-15/16" (100 mm) H	Polymer	$33.35

Bulk Components

ST-97-**-4	(40 pr.) End Caps, Screws		$6.50
6571-60-52	Tube of Adhesive	2 Gram	$5.80
6571-61-52	Bottle of Adhesive	1 Ounce	$21.75

Door Mount Foil Rack

4WFR Series

4WFR-21-1

- Designed for 15", 18" and 21" wall cabinets
- Maple construction with chrome accents
- Patented adjustable door-mount brackets provide up to 5" of adjustability (US Patent No. 7,204,569)
- TSCA Title VI compliant

Door-Mount Vertical Foil Rack

PRODUCT	DESCRIPTION	DIMS	MCO	CAB	FINISH	SLP
4WFR-15-1	Vertical Foil Rack	10-1/8" (258 mm) W x 4" (102 mm) D x 8" (204 mm) H	11" (279 mm)	W15	Maple	$82.65
4WFR-18-1	Vertical Foil Rack	13-1/8" (334 mm) W x 4" (102 mm) D x 8" (204 mm) H	14" (356 mm)	W18	Maple	$88.45
4WFR-21-1	Vertical Foil Rack	16-1/8" (410 mm) W x 4" (102 mm) D x 8" (204 mm) H	17" (432 mm)	W21	Maple	$99.35

432 Series

Tiered Wall Filler

432-WF36-6C

- Available for 3" and 6" wall cabinet applications
- Create a functional storage space behind those decorative panels
- Features adjustable shelves with chrome rails
- Full-extension, ball-bearing slides w/ soft-close
- Non soft-close available
- Tri-slide design provides stability
- TSCA Title VI compliant

5KCUP Accessory

- Holds (44) pods
- 8-screw installation
- Not available for base cabinet application
- For 3" fillers only

NOTE: See page 133 for base cabinet version

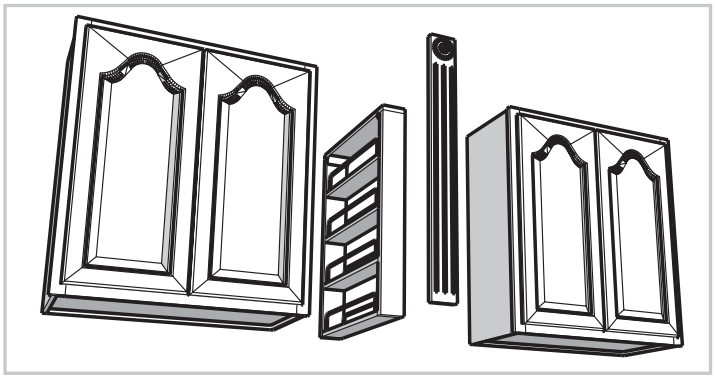

This product installs between two cabinets. Just add your door front

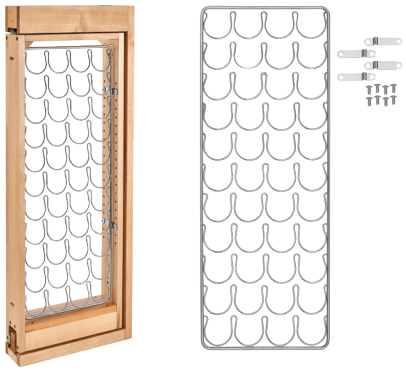

5KCUP-432-1
K-Cup Accessory
(Shown installed in a 3" Wall Filler)

432-WFBBSC30-3C
Wall Cabinet Filler
(3" version shown)

432-WF33-6C
Wall Cabinet Filler
(6" version shown)

432-WFBBSC36-3C
Wall Cabinet Filler
(3" version shown)

432-WFBBSC39-6C
Wall Cabinet Filler
(6" version shown)

432-WF42-3C
Wall Cabinet Filler
(3" version shown)

Tiered Wall Filler Pullout Organizer w/ Ball-Bearing Soft-Close

PRODUCT	DESCRIPTION	DIMS	FINISH	SLP
432-WFBBSC30-3C	Tiered Filler for 3" Width	3" (77 mm) W x 11-1/8" (283 mm) D x 30" (762 mm) H	Maple	$229.10
432-WFBBSC33-3C	Tiered Filler for 3" Width	3" (77 mm) W x 11-1/8" (283 mm) D x 33" (839 mm) H	Maple	$246.50
432-WFBBSC36-3C	Tiered Filler for 3" Width	3" (77 mm) W x 11-1/8" (283 mm) D x 36" (915 mm) H	Maple	$304.50
432-WFBBSC39-3C	Tiered Filler for 3" Width	3" (77 mm) W x 11-1/8" (283 mm) D x 39" (991 mm) H	Maple	$313.20
432-WFBBSC42-3C	Tiered Filler for 3" Width	3" (77 mm) W x 11-1/8" (283 mm) D x 42" (1067 mm) H	Maple	$321.90
432-WFBBSC30-6C	Tiered Filler for 6" Width	6" (153 mm) W x 11-1/8" (283 mm) D x 30" (762 mm) H	Maple	$240.70
432-WFBBSC33-6C	Tiered Filler for 6" Width	6" (153 mm) W x 11-1/8" (283 mm) D x 33" (839 mm) H	Maple	$306.55
432-WFBBSC36-6C	Tiered Filler for 6" Width	6" (153 mm) W x 11-1/8" (283 mm) D x 36" (915 mm) H	Maple	$313.20
432-WFBBSC39-6C	Tiered Filler for 6" Width	6" (153 mm) W x 11-1/8" (283 mm) D x 39" (991 mm) H	Maple	$333.50
432-WFBBSC42-6C	Tiered Filler for 6" Width	6" (153 mm) W x 11-1/8" (283 mm) D x 42" (1067 mm) H	Maple	$336.40
Tiered Wall Filler Pullout Organizer				
432-WF-3C	Tiered Filler for 3" Width	3" (77 mm) W x 11-1/8" (283 mm) D x 30" (762 mm) H	Maple	$200.10
432-WF33-3C	Tiered Filler for 3" Width	3" (77 mm) W x 11-1/8" (283 mm) D x 33" (839 mm) H	Maple	$208.80
432-WF36-3C	Tiered Filler for 3" Width	3" (77 mm) W x 11-1/8" (283 mm) D x 36" (915 mm) H	Maple	$214.60
432-WF39-3C	Tiered Filler for 3" Width	3" (77 mm) W x 11-1/8" (283 mm) D x 39" (991 mm) H	Maple	$226.20
432-WF42-3C	Tiered Filler for 3" Width	3" (77 mm) W x 11-1/8" (283 mm) D x 42" (1067 mm) H	Maple	$239.25
432-WF-6C	Tiered Filler for 6" Width	6" (153 mm) W x 11-1/8" (283 mm) D x 30" (762 mm) H	Maple	$229.10
432-WF33-6C	Tiered Filler for 6" Width	6" (153 mm) W x 11-1/8" (283 mm) D x 33" (839 mm) H	Maple	$240.70
432-WF36-6C	Tiered Filler for 6" Width	6" (153 mm) W x 11-1/8" (283 mm) D x 36" (915 mm) H	Maple	$242.90
432-WF39-6C	Tiered Filler for 6" Width	6" (153 mm) W x 11-1/8" (283 mm) D x 39" (991 mm) H	Maple	$253.05
432-WF42-6C	Tiered Filler for 6" Width	6" (153 mm) W x 11-1/8" (283 mm) D x 42" (1067 mm) H	Maple	$258.10
Accessories				
5KCUP-432-1	K-Cup Accessory	Fits all 432 series 3" Wall Fillers	Chrome	$42.05

3000 Series

Wine & Stemware Rack

3250SN, 3150-11SN

- Available in single 11", 16" and 18" rack
- Heavy gauge wire construction
- Hidden mounting
- Easy installation
- Available in chrome, satin nickel, brass and oil-rubbed bronze
- Quad 11" includes (4) single racks fused together for ease of installation

3150-11BR
11″ Stemware Rack
(Brass finish shown)

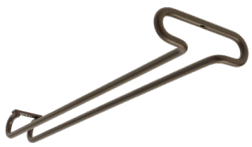

3150-16ORB
16″ Stemware Rack
(Oil-Rubbed Bronze finish shown)

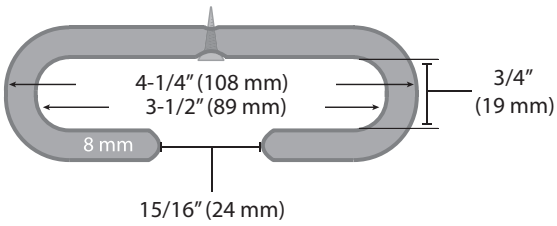

3450-11SN
Quad Stemware Rack
(Satin Nickel finish shown)

3150-18CR
18″ Stemware Rack
(Chrome finish shown)

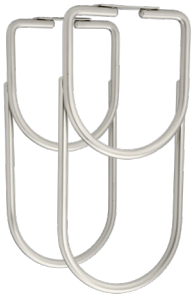

3250SN
Double Bottle Rack
(Satin Nickel finish shown)

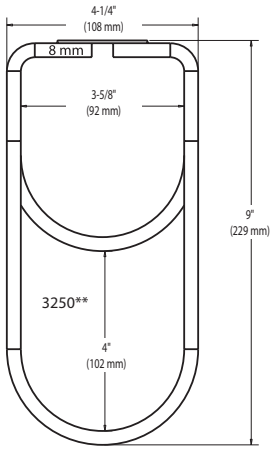

Wine and Stemware Rack

PRODUCT	DESCRIPTION	DIMS	FINISH	SLP
3150-11CR	11″ Stemware Rack	4-1/4″ (108 mm) W x 11″ (280 mm) D x 1-1/2″ (39 mm) H	Chrome	$11.60
3150-16CR	16″ Stemware Rack	4-1/4″ (108 mm) W x 16″ (407 mm) D x 1-1/2″ (39 mm) H	Chrome	$15.25
3150-18CR	18″ Stemware Rack	4-1/4″ (108 mm) W x 18″ (458 mm) D x 1-1/2″ (39 mm) H	Chrome	$18.85
3250CR	Double Bottle Rack	4-1/4″ (108 mm) W x 5/8″ (16 mm) D x 9″ (229 mm) H	Chrome	$24.65
3450-11CR	11″ Quad Stemware Rack	17″ (432 mm) W x 11″ (280 mm) D x 1-1/2″ (39 mm) H	Chrome	$55.10
Wine and Stemware Rack				
3150-11SN	11″ Stemware Rack	4-1/4″ (108 mm) W x 11″ (280 mm) D x 1-1/2″ (39 mm) H	Satin Nickel	$11.60
3150-16SN	16″ Stemware Rack	4-1/4″ (108 mm) W x 16″ (407 mm) D x 1-1/2″ (39 mm) H	Satin Nickel	$15.25
3150-18SN	18″ Stemware Rack	4-1/4″ (108 mm) W x 18″ (458 mm) D x 1-1/2″ (39 mm) H	Satin Nickel	$18.85
3250SN	Double Bottle Rack	4-1/4″ (108 mm) W x 5/8″ (16 mm) D x 9″ (229 mm) H	Satin Nickel	$24.65
3450-11SN	11″ Quad Stemware Rack	17″ (432 mm) W x 11″ (280 mm) D x 1-1/2″ (39 mm) H	Satin Nickel	$55.10
Wine and Stemware Rack				
3150-11BR	11″ Stemware Rack	4-1/4″ (108 mm) W x 11″ (280 mm) D x 1-1/2″ (39 mm) H	Brass	$11.60
3150-16BR	16″ Stemware Rack	4-1/4″ (108 mm) W x 16″ (407 mm) D x 1-1/2″ (39 mm) H	Brass	$15.25
3150-18BR	18″ Stemware Rack	4-1/4″ (108 mm) W x 18″ (458 mm) D x 1-1/2″ (39 mm) H	Brass	$18.85
3250BR	Double Bottle Rack	4-1/4″ (108 mm) W x 5/8″ (16 mm) D x 9″ (229 mm) H	Brass	$24.65
3450-11BR	11″ Quad Stemware Rack	17″ (432 mm) W x 11″ (280 mm) D x 1-1/2″ (39 mm) H	Brass	$55.10
Wine and Stemware Rack				
3150-11ORB	11″ Stemware Rack	4-1/4″ (108 mm) W x 11″ (280 mm) D x 1-1/2″ (39 mm) H	Oil-Rubbed Bronze	$14.50
3150-16ORB	16″ Stemware Rack	4-1/4″ (108 mm) W x 16″ (407 mm) D x 1-1/2″ (39 mm) H	Oil-Rubbed Bronze	$15.25
3150-18ORB	18″ Stemware Rack	4-1/4″ (108 mm) W x 18″ (458 mm) D x 1-1/2″ (39 mm) H	Oil-Rubbed Bronze	$18.85
3250ORB	Double Bottle Rack	4-1/4″ (108 mm) W x 5/8″ (16 mm) D x 9″ (229 mm) H	Oil-Rubbed Bronze	$24.65
3450-11ORB	11″ Quad Stemware Rack	17″ (432 mm) W x 11″ (280 mm) D x 1-1/2″ (39 mm) H	Oil-Rubbed Bronze	$55.10

5PD Series Pull-Down Shelf

5PD-36FOG

- Designed for 24″ and 36″ wall cabinets
- Chrome-plated metal frame
- (2) configurations
  - Wire bottom shelves with chrome wire accents
  - Solid bottom walnut shelves with satin finish with orion gray flat wire accent
- Mounts to cabinet floor and side walls
- Side and bottom mount brackets
- Gas-assisted lifting/lowering mechanism
- Locks into down position for hands-free accessibility
- Pulls down 13-1/2″ and out 16-3/4″
- TSCA Title VI compliant

Scan for video

NOTE: Weight capacity: 5PD-24CRN: 17 lb., 5PD-36CRN: 26 lb.

Pull-Down Shelving System

PRODUCT	DESCRIPTION	DIMS	MCOFL	MCOFF	CAB	FINISH	SLP
5PD-24CRN	Pull-Down	22-1/4″ (566 mm) W x 10-1/8″ (258 mm) D x 18-3/8″ (467 mm) H	22-1/2″ (572 mm)	21″ (534 mm)	W24	Silver/Chrome	$797.50
5PD-36CRN	Pull-Down	34-1/4″ (870 mm) W x 10-1/8″ (258 mm) D x 18-3/8″ (467 mm) H	34-1/2″ (876 mm)	33″ (838 mm)	W36	Silver/Chrome	$855.50
Solid Bottom Pull-Down Shelving System							
5PD-24FOG	Pull-Down	22-3/16″ (564 mm) W x 10-1/8″ (258 mm) D x 18-7/32″ (463 mm) H	22-1/2″ (572 mm)	21″ (534 mm)	FLW24	Orion Gray/ Walnut	$812.00
5PD-36FOG	Pull-Down	34-1/32″ (865 mm) W x 10-1/8″ (258 mm) D x 18-7/32″ (463 mm) H	34-1/2″ (876 mm)	33″ (838 mm)	FLW36	Orion Gray/ Walnut	$870.00

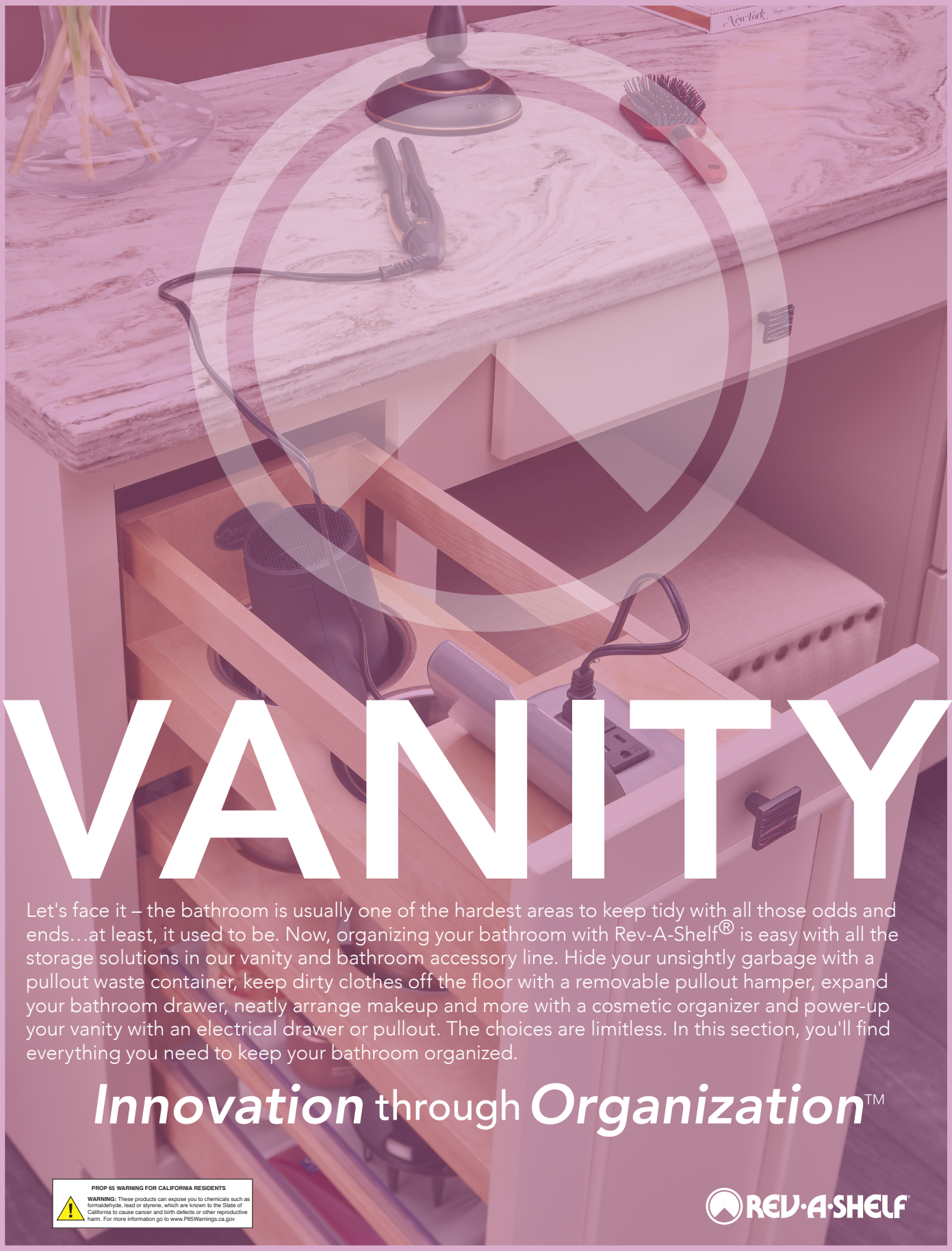

VANITY

Let's face it – the bathroom is usually one of the hardest areas to keep tidy with all those odds and ends…at least, it used to be. Now, organizing your bathroom with Rev-A-Shelf® is easy with all the storage solutions in our vanity and bathroom accessory line. Hide your unsightly garbage with a pullout waste container, keep dirty clothes off the floor with a removable pullout hamper, expand your bathroom drawer, neatly arrange makeup and more with a cosmetic organizer and power-up your vanity with an electrical drawer or pullout. The choices are limitless. In this section, you'll find everything you need to keep your bathroom organized.

Innovation through ***Organization***™

PROP 65 WARNING FOR CALIFORNIA RESIDENTS

WARNING: These products can expose you to chemicals such as formaldehyde, lead or styrene, which are known to the State of California to cause cancer and birth defects or other reproductive harm. For more information go to www.P65Warnings.ca.gov

REV-A-SHELF

4WHOX Series

Bottom Mount Hamper w/ OXO Container

- Designed for 24" base cabinets
- Natural maple dovetail construction with a semi-gloss finish
- BLUM soft-close slides
- Patented door-mount brackets with micro-adjustment (US Patent No. 8,338,076)
- (1) reversible left-hand or right-hand mounted compartment
- (2) Configurations
  - (1) 1.5 BU hamper
  - (1) 1.7 BU hamper, (1) 1.7 qt. OXO container and maple beauty ring
- Mounts to cabinet floor and door
- TSCA Title VI compliant

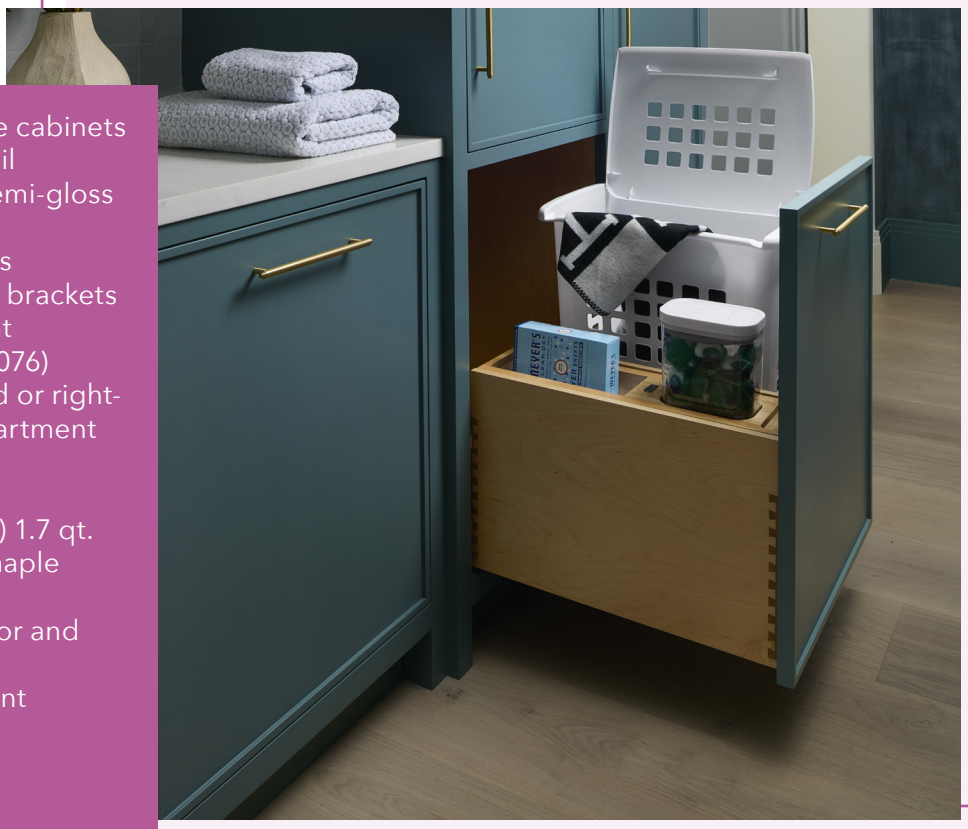

4WHOX-24DMSC-1

4WHOX-24FHDMSC-1
1.7 Bushel Hamper Pullout w/ OXO and Storage

Reversible compartment for additional storage

Wood Bottom-Mount Hamper System w/ OXO & Storage

PRODUCT	DESCRIPTION	DIMS	MCO	CAB	FINISH	SLP
4WHOX-24FHDMSC-1	1.7 BU Hamper w/ Storage	21" (534 mm) W x 22" (559 mm) D x 24-1/2" (623 mm) H	21" (534 mm)	FHB24	Maple	$639.90
4WHOX-24DMSC-1	1.5 BU Hamper w/ Storage	21" (534 mm) W x 22" (559 mm) D x 19-15/16" (507 mm) H	21" (534 mm)	B24	Maple	$634.10

Maple U-Shaped Vanity Pullout

- Designed for 30" vanity sink base cabinets
- Natural maple construction with semi-gloss finish
- Full-extension, undermount slides w/ BLUM soft-close
- Mounts to cabinet floor or side walls
- Side and bottom mount brackets
- (4) adjustable dividers, (1) 8 L waste container w/ white lid (BM), or (4) adjustable dividers and (2) removable polycarbonate bins (SM)
- Non-skid vinyl lining
- TSCA Title VI compliant

486-30VSBSC-BM-1

Can be door mounted

486-30VSBSC-BM-1
Maple U-Shaped Pullout
w/ (4) Adjustable Dividers and
(1) 8 L Container
(Bottom mount unit shown)

486-30VSBSC-SM-1
Maple U-Shaped Pullout
w/ (4) Adjustable Dividers and
(2) Acrylic Bins
(Side mount unit shown)

See page 105 for sink base version

Scan for video

U-Shaped Vanity Pullout w/ BLUM Soft-Close

PRODUCT	DESCRIPTION	DIMS	MCO	CAB	FINISH	SLP
486-30VSBSC-BM-1	Bottom Mount	25-21/32" (652 mm) W x 18-11/16" (475 mm) D x 14-1/4" (362 mm) H	25" (635 mm) - FF 25-3/4" (654 mm) - FL	VSB30	Maple	$407.45
486-30VSBSC-SM-1	Side Mount	27-9/16 - 28-3/4" (700 - 731 mm) W x 19 - 20-3/4" (483 - 528 mm) D x 6-1/2" (166 mm) H	25" (635 mm) - FF	VSB30	Maple	$384.25

445-VB Series

Vanity Outlet Grooming Organizer Pullout

445-VBOSC-8C

- Designed for 12" full-height vanity cabinets with 1-3/4", 1-1/2" and 1-5/8" face frames
- Natural maple construction with semi-gloss finish
- (2) shelves with acrylic accents
- Full-extension, undermount slides w/ BLUM soft-close
- Patented foldable slide set for easy installation (US Patent No. 10,799,020)
- Mounts to cabinet door, floor and side
- Patented door-mount brackets provide 5" of adjustability and include micro-trim adjuster (US Patent No. 8,388,076)
- Non-skid vinyl lining
- (2) removable stainless-steel bins
- In-drawer receptacle with (2) 120V plugs
- Tamper-resistant outlets
- Max Current: AC 12 amps @ 120VAC
- UL Recognized to UL962/ CSA-C22.2 no. 0-10
- Power cord with NEMA 5 – 15 plug
- Integrated cord guide ensures safe operation
- Drawer stop prevents items from being stored "ON" inside the cabinet
- Its end use determines the overall safety of this product
- US Patent No. 20210022492A1
- TSCA Title VI compliant

445-VBOSC-8C
Outlet Grooming Organizer

Scan for video

Face Frame Vanity Outlet Grooming Organizer Pullout w/ BLUM Soft-Close

PRODUCT	DESCRIPTION	DIMS	MCO	CAB	FINISH	SLP
445-VBOSC-8C	Grooming Organizer	9-9/32" (236 mm) W x 20 1/8" (511 mm) D x 26-1/8" (664 mm) H	8-1/2" (216 mm) - FF 9-1/2" (241 mm) - FL	FHVB12	Maple	$885.25

rev-a-shelf.com | 800-626-1126 | info@rev-a-shelf.com

Vanity Outlet Drawer

4VOD Series

4VOD-18SC-1

- Designed for 18" base cabinet drawers
- Natural maple construction with semi-gloss finish
- (2) compartments
- (2) stainless steel bins
- Full-extension, undermount slides w/ BLUM soft-close
- In-drawer receptacle with (2) 120V plugs
- Tamper resistant outlets
- Max Current: AC 12 amps @ 120VAC
- UL Recognized to UL962/ CSA-C22.2 No. 0-10
- Power cord with NEMA 5 – 15 plug
- Integrated cord guide ensures safe operation
- Patented design prevents items from being accidentally left plugged in when unit is closed (US Patent No. 11,070,038)
- Door-mounting brackets
- Anti-skid lining
- Drawer front not included
- The overall safety of this product is determined by its end use
- TSCA Title VI compliant

Scan for video

4VOD-18SC-1 & 4VOD-18FLSC-1
Vanity Outlet Drawer

Full Access Vanity Outlet Drawer w/ BLUM Soft-Close						
PRODUCT	DESCRIPTION	DIMS	MCO	CAB	FINISH	SLP
4VOD-18FLSC-1	Vanity Outlet Drawer	16-1/2" (420 mm) W x 20-1/8" (511 mm) D x 8-15/16" (227 mm) H	16-1/2" (419 mm)	FLVB18	Maple	$651.05
Face Frame Vanity Outlet Drawer w/ BLUM Soft-Close						
4VOD-18SC-1	Vanity Outlet Drawer	15" (381 mm) W x 20-1/2" (521 mm) D x 8-15/16" (227 mm) H	15" (381 mm)	VB18	Maple	$651.05

4VCOS Series

Vanity Drawer Organizer Insert

- Designed for 22″ or smaller vanity cabinet drawers
- Natural maple construction with semi-gloss finish
- Trim-to-fit existing drawer
- Drop-in installation
- Anti-skid vinyl lining
- Up to (13) compartments
- (2) clear acrylic lids
- TSCA Title VI compliant

4VCOS-22-1

4VCOS-22-1
Vanity Drawer Organizer Insert

Scan for video

22" Vanity Drawer Organizer Insert

PRODUCT	DESCRIPTION	DIMS	FINISH	SLP
4VCOS-22-1	Vanity Drawer Organizer	21-3/4" (553 mm) W x 21-1/8" (537 mm) D x 2" (51 mm) H	Maple	$155.90

Scale Holder

4SH Series

4SH-15-1

- Designed for 15" vanity base cabinets
- Scale clip holds a min. thickness of 0.8" to 2.0" max.
- Natural maple frame with semi-gloss finish
- Torsion spring with non-skid coating
- Patented adjustable door mount brackets provide up to 5" of adjustability (US Patent No. 7,204,569)
- TSCA Title VI compliant

Can be used for a multitude of things such as cutting boards, cookbooks and more.

4SH-15-1
Scale Holder

Scan for video

Scale Holder

PRODUCT	DESCRIPTION	DIMS	MCO	CAB	FINISH	SLP
4SH-15-1	Scale Holder	10-1/2" (267 mm) W x 3-5/8" (93 mm) D x 12-1/2" (318 mm) H	12" (305 mm)	VB15	Chrome/Maple	$117.45

4HD Series

Vanity Appliance Storage Rack

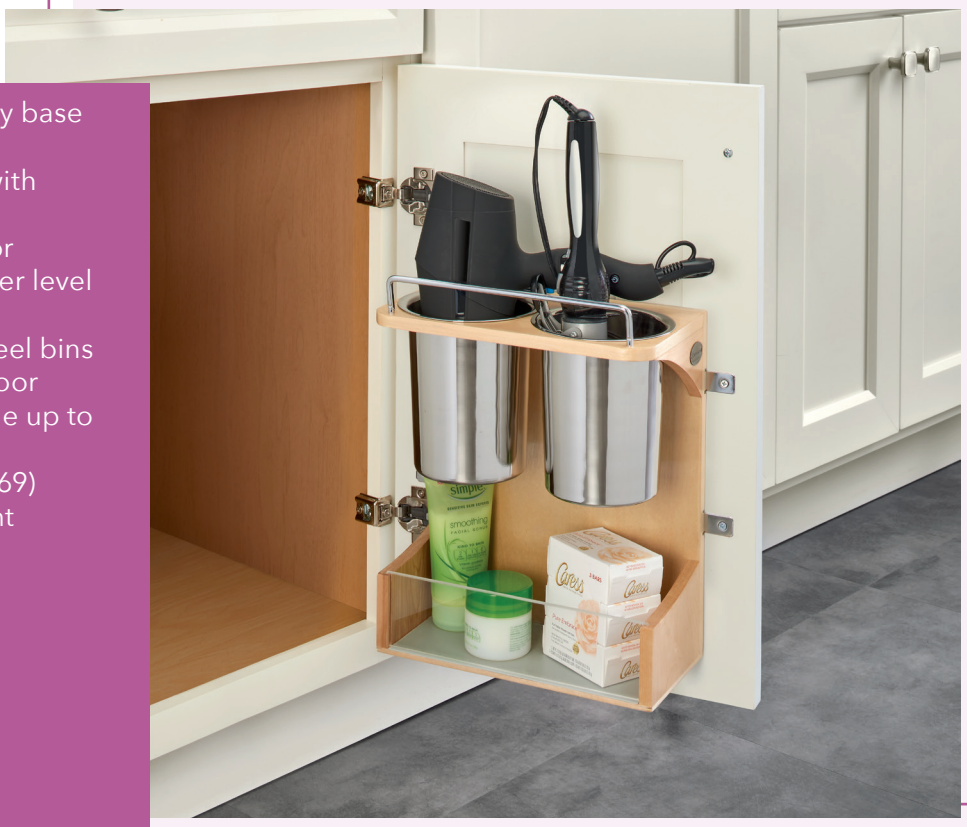

- Designed for 30" vanity base (butt door) cabinets
- Natural maple frame with semi-gloss finish
- Mounts to cabinet door
- Non-skid lining on lower level shelf
- (2) 1.25 qt. stainless steel bins
- Patented adjustable door mount brackets provide up to 5" of adjustability (US Patent No. 7,204,569)
- TSCA Title VI compliant

4HD-15-1

Scan for video

4HD-15-1
Vanity Appliance Storage Rack

Vanity Appliance Storage Rack

PRODUCT	DESCRIPTION	DIMS	MCO	CAB	FINISH	SLP
4HD-15-1	Storage Rack	10-3/4" (274 mm) W x 6" (153 mm) D x 13-7/8" (353 mm) H	12-3/8" (314 mm)	SB30 Butt	Maple	$120.35

Pullout Ironing Board

VIB Series

- Designed for 14-1/2" to 21" vanity cabinet drawer openings
- Complete drawer system, just add your drawer front
- Chrome-plated metal frame
- Over-extension, ball-bearing slides
- Mounts to cabinet side and rear wall
- Built-in ironing board

VIB-20CR

Solid surface counter overlays
CANNOT exceed 1-1/4"

VIB-20CR
Vanity Pullout Ironing Board

See closet section (page 294) for more ironing board solutions

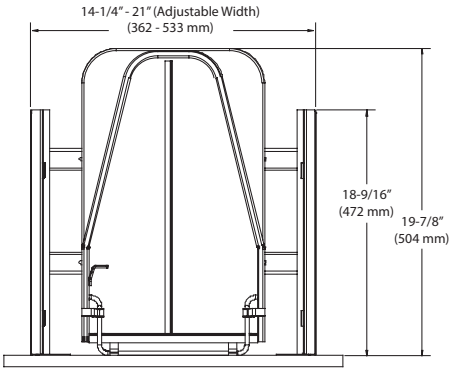

Height = 4" (102 mm)
MIN OPENING: Height = 3-21/32" (93 mm)

NOTE: Not compatible with inset cabinetry

Vanity Pullout Ironing Board

PRODUCT	DESCRIPTION	DIMS	MCO	CAB	FINISH	SLP
VIB-20CR	Pullout Ironing Board	See drawings for detailed specifications.	14-1/4" (362 mm)	VB18	Chrome	$348.00
RAS-VIB-COVER-52	Replacement Cover				Silver	$26.10

441 Series

L-Shaped Vanity Organizer

- Designed for 24" and 30" vanity sink base cabinets
- Natural maple dovetail construction with semi-gloss finish
- Full-extension, undermount slides w/ BLUM soft-close
- Patented mounting straps (US Patent No. 9,756,941)
- Anti-skid vinyl lining on lower level
- (6) acrylic bins for upper level
- Mounts to cabinet floor
- Patented design (US Patent No. D854,359)
- TSCA Title VI compliant

441-15VSBSC-1

Scan for video

441-12VSBSC-1
Vanity Organizer for 24"

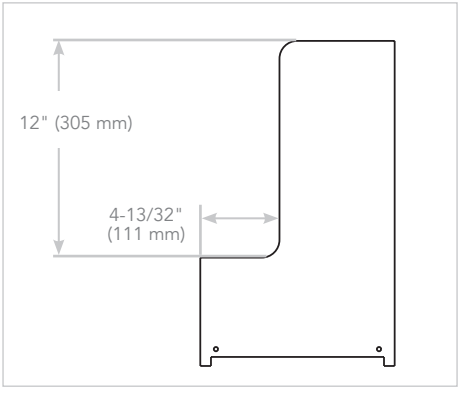

PIPE CLEARANCE DIMENSIONS
(For both units)

L-Shaped Vanity Organizer w/ BLUM Soft-Close

PRODUCT	DESCRIPTION	DIMS	MCO	CAB	FINISH	SLP
441-12VSBSC-1	Vanity Organizer for 24"	8-1/2" (216 mm) W x 18-25/32" (478 mm) D x 18-7/8" (480 mm) H	9-1/4" (235 mm)	VSB24	Maple	$395.85
441-15VSBSC-1	Vanity Organizer for 36"	11-21/32" (297 mm) W x 18-25/32" (478 mm) D x 18-7/8" (480 mm) H	12-5/32" (309 mm)	VSB30	Maple	$479.95

Vanity Storage Rack

4VR Series

4VR-12-1

- Designed for 12", 15", 18", 21" and 24" vanity base cabinets
- Natural maple frame with semi-gloss finish
- (2) non-skid vinyl shelves with acrylic accents
- Mounts to cabinet door
- Patented adjustable door mount brackets provide up to 5" of adjustability
  (US Patent No. 7,204,569)
- TSCA Title VI compliant

Patented adjustable mounting brackets
(US Patent No. 7,204,569)

4VR-18-1
Vanity Storage Rack
(18" version shown)

Door Mount Vanity Storage Rack

PRODUCT	DESCRIPTION	DIMS	MCO	CAB	FINISH	SLP
4VR-12-1	Storage Rack for 12"	8-1/4" (210 mm) W x 3-1/8" (80 mm) D x 15-1/2" (394 mm) H	9" (229 mm)	VB12	Maple	$101.50
4VR-15-1	Storage Rack for 15"	11-1/4" (286 mm) W x 3-1/8" (80 mm) D x 15-1/2" (394 mm) H	12" (305 mm)	VB15	Maple	$107.30
4VR-18-1	Storage Rack for 18"	14-1/4" (362 mm) W x 3-1/8" (80 mm) D x 15-1/2" (394 mm) H	15" (381 mm)	VB18	Maple	$121.80

8-010/8-700 Series

Undersink Waste Containers

8-010

- Designed for 33" and 36" sink base cabinets or 24" single door sink base cabinets
- Single black polymer container with built-in handle, 14 or 15 L
- Stainless steel or white lacquer finish
- Lid rises as container pivots out
- Mounts to cabinet door, floor and side walls

8-700

- Designed for full access 36" sink base cabinets
- Single white polymer bin with built-in handle, 20 L
- Lid rises as container pivots out
- Mounts to cabinet door and side walls

8-010314-15

8-010212-14
14 L Container
(White lacquer finish shown)

8-010412-15
15 L Container, White
(White lacquer finish shown)

8-700411-20
20 L Sink Base Container
(White polymer finish shown)

Undersink Waste Container Pivot Outs

PRODUCT	DESCRIPTION	DIMS	MCO	CAB	FINISH	SLP
8-010212-14	Single 14 L	11" (280 mm) W x 10-1/2" (267 mm) D x 17-1/8 - 11" (435 - 280 mm) H	13-3/4" (350 mm)	VSB33	White Lacquered	$117.45
8-010412-15	Single 15 L	11-3/4" (299 mm) W x 10-1/2" (267 mm) D x 15-3/16" (386 mm) H	14-3/4" (375 mm) - FF 14-3/4" (375 mm) - FL	VSB33	White Lacquered	$129.05
8-010314-15	Single 15 L	11-3/4" (299 mm) W x 10-1/2" (267 mm) D x 15-3/16" (386 mm) H	14-3/4" (375 mm) - FF 14-3/4" (375 mm) - FL	VSB33	Stainless Steel	$158.05
8-700411-20	Single 20 L	15-3/4" (401 mm) W x 7-1/4" (185 mm) D x 18" (458 mm) H	17-1/2" (445 mm)	VSB33	White Polymer	$201.55

Chrome Universal Waste Pullout

RUKD Series

RUKD-820-1

RUKD-1432RB-1
Single 32 qt. Waste Container w/ Rear Basket

- Designed for 12″ and 18″ base cabinet*
- Universal frame configuration
- Single 20 and 32 qt. polymer containers, gray
- Chrome-plated welded wire frame
- Full-extension, ball-bearing slides
- Clip-on handle
- RB versions come with a rear storage basket
- 4-screw installation
- Mounts to cabinet floor
- RV DM17 KIT door-mount kit (sold separately)

** Can be installed in sink base applications*

Chrome Universal Waste Pullout

PRODUCT	DESCRIPTION	DIMS	MCO	CAB	FINISH	SLP
RUKD-820-1	Single 20 qt.	8-5/8″ (219 mm) W x 15-3/4″ (400 mm) D x 16-5/8″ (422 mm) H 14-1/2″ (368 mm) W x 15-3/4″ (400 mm) D x 16-5/8″ (422 mm) H	8-1/2″ (216 mm) 14-1/2″ (368 mm)	B12 B18	Gray/Chrome	$102.95
RUKD-1420RB-1	Single 20 qt. w/ Rear Basket	14-1/2″ (368 mm) W x 15-3/4″ (400 mm) D x 16-5/8″ (422 mm) H	14-1/2″ (368 mm)	B18	Gray/Chrome	$108.75
RUKD-932-1	Single 32 qt.	9-3/8″ (238 mm) W x 15-3/4″ (400 mm) D x 19-1/2″ (495 mm) H 14-1/2″ (368 mm) W x 16-7/16″ (418 mm) D x 19-1/2″ (495 mm) H	9-1/2″ (241 mm) 14-1/2″ (368 mm)	B12	Gray/Chrome	$105.85
RUKD-1432RB-1	Single 32 qt. w/ Rear Basket	14-1/2″ (368 mm) W x 16-7/16″ (418 mm) D x 19-1/2″ (495 mm) H	14-1/2″ (368 mm)	B18	Gray/Chrome	$113.85
Accessories						
RV DM17 KIT	Heavy-Duty Door Mount Kit				Chrome	$39.15

Aluminum Bottom Mount Rev-A-Motion®

5149 Series

5149-15DM18-117

MADE IN THE USA

REV-A-MOTION® SOFT OPEN SOFT CLOSE
US PATENT NO: 8,091,971

- Designed for 15″ base height vanity cabinets
- Single 35 qt. polymer containers, metallic silver or white
- Anodized aluminum frame, metallic silver or white base
- Full-extension with 1-1/2″ over-travel, ball-bearing slides w/ Rev-A-Motion® soft-open/soft-close (US Patent No. 8,091,971)
- Patented door-mount brackets with 5" of adjustability (US Patent No. 8,939,526)

See page 37 for more information

Aluminum Bottom Mount Waste Container Pullout w/ Rev-A-Motion® - Reduced Depth

PRODUCT	DESCRIPTION	DIMS	MCO	CAB	FINISH	SLP
5149-15DM18-111	Single 35 qt.	12-1/8" (308 mm) W x 16" (407 mm) D x 19-1/2" (496 mm) H	11-1/2" (292 mm)- FF/ 12-1/4" (311 mm) - FL	VB15	White/Alum	$408.90
5149-15DM18-117	Single 35 qt.	12-1/8" (308 mm) W x 16" (407 mm) D x 19-1/2" (496 mm) H	11-1/2" (292 mm)- FF/ 12-1/4" (311 mm) - FL	VB15	Silver/Alum	$408.90

4SOWC Series

Door Mount Vanity Waste Container

- Designed for 30" vanity base cabinets
- Single 8 L polymer container, metallic silver
- Natural maple dovetail frame with semi-gloss finish
- Mounts to cabinet door
- Patented adjustable door-mount brackets provide up to 5" of adjustability (US Patent No. 7,204,569)
- (1) white lid
- TSCA Title VI compliant

Door Mount Vanity Waste Container

PRODUCT	DESCRIPTION	DIMS	MCO	CAB	FINISH	SLP
4SOWC-8-1	Single 8 L	10-3/8" (264 mm) W x 7-3/8" (188 mm) D x 12-5/16" (313 mm) H	12" (305 mm)	VSB30	Silver	$92.80

4WCSC Series

Reduced Depth Bottom Mount Waste Container

- Designed for 30" vanity sink base cabinets and 15" base vanity cabinets
- Single 32 and 35 qt. polymer container, gray (32 qt. only) or metallic silver
- Natural maple dovetail frame with semi-gloss finish
- Full-extension, undermount slides w/ BLUM soft-close
- Mounts to cabinet door and floor
- Patented door-mount brackets with 5" of adjustability and micro-trim adjuster (US Patent No. 8,388,076)
- Rear storage
- 35 qt. polymer lids available (sold separately)
- TSCA Title VI compliant

4WCSC-1535DM19-1
Single 35 qt. Waste Container, Reduced Depth
(Metallic silver/maple finish shown)

4WCSC-1532DM16-1

Reduced Depth Bottom Mount Waste Container w/ BLUM Soft-Close

PRODUCT	DESCRIPTION	DIMS	MCO	CAB	FINISH	SLP
4WCSC-1532DM16-1	Single 32 qt.	12" (305 mm) W x 15-21/32" (399 mm) D x 19-1/2" (496 mm) H	12" (305 mm)	VB15	Gray/Maple	$378.45
4WCSC-1535DM19-1	Single 35 qt.	12" (305 mm) W x 18-21/32 - 18-5/8" (474 - 474 mm) D x 19-1/2" (496 mm) H	12" (305 mm)	VB15	Metallic Silver/Maple	$413.25

Bottom Mount Wood Hamper

4WH Series

4WH-VCSC-21DM-1

- Designed for face frame 24" vanity base cabinets
- Single 1.5 BU polymer hamper, white
- Natural maple frame with semi-gloss finish
- Full-extension concealed slides w/ BLUM soft-close
- Mounts to cabinet door and floor
- (1) matching lid
- TSCA Title VI compliant

Scan for video

See closet section (page 296) for more hampers

1.5 BU Bottom Mount Hamper Pullout w/ BLUM Soft-Close

PRODUCT	DESCRIPTION	DIMS	MCO	CAB	FINISH	SLP
4WH-VCSC-21DM-1	Hamper Pullout	20-5/16" (516 mm) W x 18-11/16" (475 mm) D x 21-1/4" (540 mm) H	21" (533 mm)	VB24	Maple	$462.55
Accessories						
HPB-03323-52	Replacement Hamper				Polymer	$49.30

4VHTM Series

Top Mount Wood Hamper

4VHTM-1520DM-1

- Designed for face frame 18" vanity height and base height vanity cabinets
- Single 1.5 BU polymer hamper w/ lid, white
- Natural maple frame with semi-gloss finish
- Full-extension w/ 2" over-travel, ball-bearing slides
- Mounts to cabinet door, rear and side walls
- Adjustable rear mount brackets and pre-assembled door-mount brackets
- TSCA Title VI compliant

See closet section (page 296) for more hampers

*Replacement lid Part No: SP-HPB-LID

Maple Top Mount Pullout Hamper

PRODUCT	DESCRIPTION	DIMS	MCO	CAB	FINISH	SLP
4VHTM-1520DM-1	1.5 BU Hamper	15" (381 mm) W x 19-7/8" (505 mm) D x 20" (508 mm) H	15" (381 mm)	VB18	White/Maple	$198.65
HPB-03323-52	Replacement Hamper	14" (356 mm) W x 18-5/8" (473 mm) D x 18-1/4" (464 mm) H (no lid)*			Polymer	$49.30

Steel Top Mount Hamper

53TMVH Series

53TMVH-24SCDM-2-FL

- Designed for full access 24″ vanity base cabinets with 5/8″ or 3/4″ side walls
- Double .85 BU polymer containers, gray and white
- Powder-coated metal frame, white
- Door mount brackets
- Full-extension slides w/ soft-close
- Mounts to cabinet door and side walls
- Pre-assembled door-mount brackets
- (1) gray and (1) white lid

53TMVH-24SCDM-2-FL
.85 BU Hamper

See closet section (page 296) for more hampers

Steel Top Mount Vanity Hamper Pullout w/ Soft-Close

PRODUCT	DESCRIPTION	DIMS	MCO	CAB	FINISH	SLP
53TMVH-24SCDM-2-FL	Top Mount Hamper	22-1/8" (562 mm) W x 21-21/32" (550 mm) D x 19-1/16" (485 mm) H	22-1/8" (562 mm)	FLFHVB24	White/Gray/ Steel	$507.50

HPRV Series

Polymer Bottom Mount Hamper

- Designed for face frame 18" vanity height and base height vanity cabinets
- Single 1.5 BU polymer hamper, white
- 4-screw installation
- Powder-coated white wire frame
- Full-extension, ball-bearing slides
- Mounts to cabinet floor
- Door-mount kit available (sold separately)

See closet section (page 296) for more hampers

HPRV-1520 S
1.5 BU Hamper

HPRV-1520 S

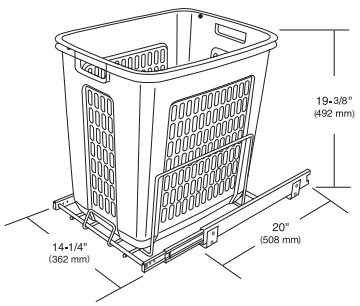

Polymer Bottom Mount Hamper Pullout

PRODUCT	DESCRIPTION	DIMS	MCO	CAB	FINISH	SLP
HPRV-1520 S	1.5 BU Hamper	14-1/4" (362 mm) W x 20" (508 mm) D x 19-3/8" (493 mm) H	14-1/2" (368 mm)	VB18	White/Aluminum	$160.95
Accessories						
HPB-03323-52	Replacement Hamper	14" (356 mm) W x 18-5/8" (473 mm) D x 18-1/4" (464 mm) H			Polymer	$49.30
RV DM KIT	Heavy Duty Door Mount Kit				White	$39.15

Wire Bottom Mount Hamper

HRV Series

HRV-1520 S CR

- Designed for 15" and 18" vanity cabinets
- Single 1- 1.7 BU wire hampers
- 4-screw installation
- Chrome-plated or powder-coated white wire frame
- Full-extension, ball-bearing slides
- Mounts to cabinet floor
- (1) 1.7 BU machine washable canvas liner included with HRV-1520 S CR
- Door-mount kit available (sold separately)

HRV-1215 S
1 BU Hamper

HRV-1515 S
1.3 BU Hamper

See closet section (page 296) for more hampers

PRODUCT	DESCRIPTION	DIMS	MCO	CAB	FINISH	SLP
Wire Bottom Mount Hamper Pullout						
HRV-1215 S	1.0 BU Hamper	11-7/8" (302 mm) W x 18" (458 mm) D x 14-3/4" (375 mm) H	11-1/2" (292 mm) - FF 12" (305 mm) - FL	VB15	White	$204.45
HRV-1220 S	1.4 BU Hamper	11-7/8" (302 mm) W x 18" (458 mm) D x 19-3/8" (493 mm) H	11-3/4" (298 mm) - FF 12" (305 mm) - FL	VB15	White	$204.45
HRV-1515 S	1.3 BU Hamper	14-3/4" (375 mm) W x 18" (458 mm) D x 14-3/4" (375 mm) H	14-1/2" (368 mm) - FF 14-3/4" (375 mm) - FL	VB18	White	$210.25
HRV-1520 S	1.7 BU Hamper	14-3/4" (375 mm) W x 18" (458 mm) D x 19-3/8" (493 mm) H	14-1/2" (368 mm) - FF 14-3/4" (375 mm) - FL	VB18	White	$221.85
Wire Bottom Mount Hamper Pullout w/ Canvas Liner						
HRV-1520 S CR	1.7 BU Hamper	14-3/4" (375 mm) W x 18" (458 mm) D x 19-3/8" (493 mm) H	14-1/2" (368 mm) - FF 14-3/4" (375 mm) - FL	VB18	Chrome	$227.65
Accessories						
HRV-1520-LINER	1.7 BU Replacement Liner				Tan	$44.95
RV DM KIT	Heavy Duty Door Mount Kit				White	$39.15

NOTE: Only HRV-1520 S CR includes (1) liner

5190 Series

Aluminum Bottom Mount Canvas Hamper

REV-A-MOTION SOFT OPEN SOFT CLOSE
US PATENT NO: 8,091,971

- Designed for 18" base height vanity cabinets
- Single 2.1 BU canvas liner, tan (machine washable)
- Anodized aluminum frame, metallic silver or white base
- Full-extension with 1-1/2" over-travel, ball-bearing slides w/ Rev-A-Motion® soft-open/ soft-close (US Patent No. 8,091,971)
- Mounts to cabinet door and floor
- Patented door-mount brackets with 5" of adjustability (US Patent No. 8,939,526)

5190-15RM-117

See closet section (page 296) for more hampers

Aluminum Bottom Mount Canvas Hamper w/ Rev-A-Motion®

PRODUCT	DESCRIPTION	DIMS	MCO	CAB	FINISH	SLP
5190-15RM-117	2.1 BU Canvas Hamper w/ Silver Base	14-5/16" (364 mm) W x 18-1/32" (458 mm) D x 19-11/32" (491 mm) H	14-1/2" (368 mm)	VB18	Silver/Tan	$536.50
Accessories						
5190-LINER	Canvas Liner Replacement	12" (305 mm) W x 18" (458 mm) D x 16" (407 mm) H			Tan	$46.40

Aluminum Bottom Mount Wire Hampers

CH Series

REV-A-MOTION SOFT OPEN SOFT CLOSE
US PATENT NO: 8,091,971

CH-241419-RM-217

- Designed for 27" base height vanity cabinets
- Double 1.2 BU wire hampers, with (2) canvas liners, machine washable
- Anodized aluminum frame, metallic silver
- Full-extension with 1-1/2" over-travel, ball-bearing slides w/ Rev-A-Motion® soft-open/soft-close (US Patent No. 8,091,971)
- Mounts to cabinet door and floor
- Patented door-mount brackets with 5" of adjustability (US Patent No. 8,939,526)

CH-241419-RM-217
Double 1.2 BU Hampers
w/ Silver Base

See closet section (page 296) for more hampers

Scan for video

Aluminum Bottom Mount Wire Hamper w/ Rev-A-Motion®

PRODUCT	DESCRIPTION	DIMS	MCO	CAB	FINISH	SLP
CH-241419-RM-217	Double 1.2 BU Hampers w/ Silver Base	24" (610 mm) W x 13-15/16" (355 mm) D x 18-7/8" (480 mm) H	24" (610 mm)	VB27	Silver/Tan	$710.50
Accessories						
5CHB-Liner	(1) Replacement Canvas Liner				Tan	$29.00

4WH Series

Bottom Mount Rev-A-Motion®

- Designed for 18" full height vanity and base height vanity cabinets
- Single 1.5 BU polymer hamper w/ lid, white
- Natural maple frame with semi-gloss finish
- Full-extension with 1-1/2" over-travel, ball-bearing slides w/ Rev-A-Motion® soft-open/soft-close (US Patent No. 8,091,971)
- Mounts to cabinet door and floor
- Pre-assembled door-mount brackets
- TSCA Title VI compliant

4WH-RM-15DM-1

US PATENT NO: 8,091,971

REV-A-MOTION SOFT OPEN SOFT CLOSE

See closet section (page 296) for more hampers

*Replacement lid Part No: SP-HPB-LID

Bottom Mount Hamper Pullout w/ Rev-A-Motion®

PRODUCT	DESCRIPTION	DIMS	MCO	CAB	FINISH	SLP
4WH-RM-15DM-1	1.5 BU Hamper	14-1/4" (362 mm) W x 19-3/4" (502 mm) D x 21" (534 mm) H	14-1/2" (381 mm) - FF 14-1/2" (381 mm) - FL	FHVB18	White/Maple	$492.25
HPB-03323-52	Replacement Hamper	14" (356 mm) W x 18-5/8" (473 mm) D x 18-1/4" (464 mm) H (no lid)*			Polymer	$49.30

Pullout Vanity Fillers

432-VF Series

432-VF26SC-6

- Designed for 3" and 6" vanity filler applications
- Natural maple frame with semi-gloss finish
- Full-extension, undermount slides w/ BLUM soft-close
- Patented undermount soft-close slide system (US Patent No. 8,733,865)
- Mounts between cabinets
- Adjustable shelves with clear rails and non-skid vinyl lining
- (4) or (6) polycarbonate bins
- TSCA Title VI compliant

432-VF30SC-3
3" Vanity Base Height Filler w/ (6) Bins

NOTE: Polycarbonate Bins = 7" (178 mm) W x 1-3/4" (45 mm) D x 2-1/4" (57 mm) H

Vanity Filler Pullout w/ BLUM Soft-Close

PRODUCT	DESCRIPTION	DIMS	FINISH	SLP
432-VF26SC-3	3" Vanity Filler w/ (4) Bins	3" (77 mm) W x 19" (483 mm) D x 26" (661 mm) H	Maple	$421.95
432-VF26SC-6	6" Vanity Filler w/ (4) Bins	6" (153 mm) W x 19" (483 mm) D x 26" (661 mm) H	Maple	$508.95
432-VF30SC-3	3" Vanity Base Height Filler w/ (6) Bins	3" (77 mm) W x 19" (483 mm) D x 30" (762 mm) H	Maple	$479.95
432-VF30SC-6	6" Vanity Base Height Filler w/ (6) Bins	6" (153 mm) W x 19" (483 mm) D x 30" (762 mm) H	Maple	$566.95

445 Series

Grooming Organizer

- Designed for face frame 12" vanity cabinets with full height door
- Natural maple frame with semi-gloss finish
- Full-extension, undermount slides w/ BLUM soft-close
- Mounts to cabinet door and floor
- Patented door-mount brackets provide 5" of adjustability and include micro-trim adjuster (US Patent No. 8,388,076)
- Adjustable shelves with clear rails and non-skid vinyl lining
- (2) stainless steel bins
- Patented design (US Patent No. D596,424)
- TSCA Title VI compliant

445-VCG25SC-8

445-VCG20SC-8
8" Vanity Grooming Organizer

Grooming Organizer Pullout w/ BLUM Soft-Close

PRODUCT	DESCRIPTION	DIMS	MCO	CAB	FINISH	SLP
445-VCG20SC-8	8" Vanity Grooming Organizer	8-7/16" (215 mm) W x 19-9/16" (497 mm) D x 20-3/8" (518 mm) H	9" (227 mm)	FHVB12	Wood	$436.45
445-VCG25SC-8	8" Base Height Vanity Grooming Organizer	8-7/16" (215 mm) W x 19-9/16" (497 mm) D x 25-9/16" (650 mm) H	9" (227 mm)	FHVB12	Wood	$522.00

Vanity Tiered Organizer

448 Series

448-VC25SC-8

- Designed for face frame 12" vanity cabinets with full height door
- Natural maple frame with semi-gloss finish
- Full-extension, undermount slides w/ BLUM soft-close
- Mounts to cabinet door and floor
- Patented door-mount brackets provide 5" of adjustability and include micro-trim adjuster (US Patent No. 8,388,076)
- Adjustable shelves with clear rails and non-skid vinyl lining
- (6) or (9) polycarbonate bins
- Patented mounting straps (US Patent No. 9,756,941)
- TSCA Title VI compliant

448-VC25SC-8
8" Base Height Vanity Organizer
w/ (9) Bins

Tiered Vanity Organizer Pullout w/ BLUM Soft-Close

PRODUCT	DESCRIPTION	DIMS	MCO	CAB	FINISH	SLP
448-VC20SC-8	8" Vanity Organizer w/ (6) Bins	8-7/16" (215 mm) W x 19-9/16" (497 mm) D x 20-3/8" (518 mm) H	8-1/2" (216 mm) - FF 8-1/2" (216 mm) - FL	FHVB12	Wood	$595.95
448-VC25SC-8	8" Base Height Vanity Organizer w/ (9) Bins	8-7/16" (215 mm) W x 19" (483 mm) D x 25-9/16" (650 mm) H	8-1/2" (216 mm) - FF 8-1/2" (216 mm) - FL	FHVB12	Wood	$682.95

NOTE: Polycarbonate Bins = 7" (178 mm) W x 1-3/4" (45 mm) D x 2-1/4" (57 mm) H

SBVDTF-Series

Flexible Vanity Drip Tray

- Designed for 27" to 42" sink base cabinets
- Flexible, durable and easy-to-clean TPE construction, gray
- Trimmable
- Drop-in installation
- Funnels excess water out of the front of your cabinet
- Can be installed in existing cabinet construction

SBVDTF-3336-14-1

See sink section page 84 for sink base version

Flexible, durable, and easy-to-clean TPE construction, gray

Funnels excess water out of the front of your cabinet

Flexible Drip Tray

PRODUCT	DESCRIPTION	DIMS	CAB	FINISH	SLP
SBVDTF-2124-14-1	Drip Tray	22-1/2" (572 mm) W x 20-1/4" (515 mm) D x 3/4" (19 mm) H	VSB-24-27	Gray	$58.00
SBVDTF-2730-14-1	Drip Tray	28-1/2" (724 mm) W x 20-1/4" (515 mm) D x 3/4" (19 mm) H	VSB-27-30	Gray	$63.65
SBVDTF-3336-14-1	Drip Tray	34-1/2" (876 mm) W x 20-1/4" (515 mm) D x 3/4" (19 mm) H	VSB-33-36	Gray	$70.35

Vanity Drip Tray

SBVDT Series

SBVDT-2730-A-1

- Designed for installation in new 24" to 36" vanity sink base cabinets
- Glossy polystyrene construction, almond or metallic silver
- Drop-in installation
- Protects the bottom of your cabinet from water damage
- Recommended for new construction only

See sink section page 85 for sink base version

S: Metallic Silver, A: Almond

Tray Capacity	
SBVDT-2124	7/8 qt.
SBVDT-2730	1-1/4 qt.
SBVDT-3336	1-1/2 qt.

Vanity Drip Tray

PRODUCT	DESCRIPTION	DIMS	MIN TRIM	FINISH	SLP
SBVDT-2124-A-1	Drip Tray	22-1/2" (572 mm) W x 20-1/4" (515 mm) D x 3/4" (20 mm) H	19-1/2" (495 mm) W x 18-1/2" (470 mm) D	Almond	$58.75
SBVDT-2124-S-1	Drip Tray	22-1/2" (572 mm) W x 20-1/4" (515 mm) D x 3/4" (20 mm) H	19-1/2" (495 mm) W x 18-1/2" (470 mm) D	Metallic Silver	$61.65
SBVDT-2730-A-1	Drip Tray	28-1/2" (724 mm) W x 20-1/4" (515 mm) D x 3/4" (20 mm) H	25-1/2" (648 mm) W x 18-1/2" (470 mm) D	Almond	$65.10
SBVDT-2730-S-1	Drip Tray	28-1/2" (724 mm) W x 20-1/4" (515 mm) D x 3/4" (20 mm) H	25-1/2" (648 mm) W x 18-1/2" (470 mm) D	Metallic Silver	$67.40
SBVDT-3336-A-1	Drip Tray	34-1/2" (876 mm) W x 20-1/4" (515 mm) D x 3/4" (20 mm) H	31-1/2" (800 mm) W x 18-1/2" (470 mm) D	Almond	$72.50
SBVDT-3336-S-1	Drip Tray	34-1/2" (876 mm) W x 20-1/4" (515 mm) D x 3/4" (20 mm) H	31-1/2" (800 mm) W x 18-1/2" (470 mm) D	Metallic Silver	$73.95
(12) Vanity Drip Trays					
SBVDT-2124-A-12	(12) Drip Trays	22-1/2" (572 mm) W x 20-1/4" (515 mm) D x 3/4" (20 mm) H	19-1/2" (495 mm) W x 18-1/2" (470 mm) D	Almond	$53.65 ea.
SBVDT-2124-S-12	(12) Drip Trays	22-1/2" (572 mm) W x 20-1/4" (515 mm) D x 3/4" (20 mm) H	19-1/2" (495 mm) W x 18-1/2" (470 mm) D	Metallic Silver	$58.45 ea
SBVDT-2730-A-12	(12) Drip Trays	28-1/2" (724 mm) W x 20-1/4" (515 mm) D x 3/4" (20 mm) H	25-1/2" (648 mm) W x 18-1/2" (470 mm) D	Almond	$52.90 ea
SBVDT-2730-S-12	(12) Drip Trays	28-1/2" (724 mm) W x 20-1/4" (515 mm) D x 3/4" (20 mm) H	25-1/2" (648 mm) W x 18-1/2" (470 mm) D	Metallic Silver	$63.80 ea
SBVDT-3336-A-12	(12) Drip Trays	34-1/2" (876 mm) W x 20-1/4" (515 mm) D x 3/4" (20 mm) H	31-1/2" (800 mm) W x 18-1/2" (470 mm) D	Almond	$63.80 ea
SBVDT-3336-S-12	(12) Drip Trays	34-1/2" (876 mm) W x 20-1/4" (515 mm) D x 3/4" (20 mm) H	31-1/2" (800 mm) W x 18-1/2" (470 mm) D	Metallic Silver	$69.30 ea

5SBWC Series

Sink Base Waste Pullout

- Designed for 24" and larger sink base cabinets
- (1) 8 L and (1) 15 L bin, both with handles
- Full-extension, undermount slides w/ soft-close
- Mounts to cabinet floor
- (1) green lid and (1) white lid
- Door-mounting kit (sold separately)

Scan for video

5SBWC-815S-1

Wire Undersink Waste Pullout

PRODUCT	DESCRIPTION	DIMS	MCO	CAB	FINISH	SLP
5SBWC-815S-1	(1) 8 L and (1) 15 L Bin	8-15/16" (228 mm) W x 18-19/32" (473 mm) D x 14-1/4" (362 mm) H	9" (227 mm)	VSB24+	Silver	$173.30
Accessories						
5WB-DMKIT	Door Mount Kit				Chrome	$39.15

5SBWCC Series

Sink Base Waste & Cleaning Pullout

- Designed for 24" and larger sink base cabinets
- (1) 8 L with removable rack and (2) 1 L spray bottles
- Full-extension, undermount slides w/ soft-close
- Mounts to cabinet floor
- (1) green lid
- Door-mounting kit (sold separately)

Scan for video

5SBWC-815S-1

Wire Undersink Waste & Cleaning Pullout

PRODUCT	DESCRIPTION	DIMS	MCO	CAB	FINISH	SLP
5SBWCC-8S-1	(1) 8 L and (2) 1 L Bottles	8-15/16" (228 mm) W x 18-19/32" (473 mm) D x 14-1/4" (362 mm) H	9" (227 mm)	VSB24+	Silver	$152.25
Accessories						
5WB-DMKIT	Door-Mount Kit				Chrome	$39.15

CLOSET

The company that has become America's market leader in "whole home storage solutions", brings you innovative solutions for your closet that add greater convenience and ease of use.

True to our success story, the closet program has a plethora of superior quality accessories that include hampers, mirrors, ironing boards and hooks, pulls and knobs in numerous finishes and multiple sizes.

Innovation through ***Organization***™

PROP 65 WARNING FOR CALIFORNIA RESIDENTS

WARNING: These products can expose you to chemicals such as formaldehyde, lead or styrene, which are known to the State of California to cause cancer and birth defects or other reproductive harm. For more information go to www.P65Warnings.ca.gov

REV-A-SHELF®

CSOHSL Series

Black Hamper Pullout

- Designed for 14" depth closet cabinets
- Available in 18", 24" and 30" section widths
- Full-extension, 75 lb. rated, ball-bearing steel slides
- Removable canvas bag w/ handles
  - 18" and 24" - (1) canvas bag
  - 30" - (2) canvas bags
- Mounts to cabinet sides
- Installs easily in 32 mm applications

CSOHSL-24-1

Scan for video

SIDELINES® by REV-A-SHELF

CSOHSL-24-1
Black Hamper Pullout
(24" version shown)

1.7 BU removable canvas bag w/ handles

Black Hamper Pullout

PRODUCT	DESCRIPTION	DIMS	MCO	FINISH	SLP
CSOHSL-18-1	1.7 BU Hamper	18" (458 mm) W x 14" (356 mm) D x 20-7/8" (531 mm) H	18" (457 mm)	Black	$139.20
CSOHSL-24-1	2.1 BU Hamper	24" (610 mm) W x 14" (356 mm) D x 20-7/8" (531 mm) H	24" (610 mm)	Black	$150.80
CSOHSL-30-1	(2) 1.3 BU Hampers	30" (762 mm) W x 14" (356 mm) D x 20-7/8" (531 mm) H	30" (762 mm)	Black	$173.30

Iron Holder

IRH Series

- Easy installation
- Heavy-duty wire construction, silver mist
- Cord management
- Mounts to cabinet or wall

IRH-SM-1
Iron Holder

SIDELINES® by REV-A-SHELF

Iron Holder

PRODUCT	DESCRIPTION		FINISH	SLP
IRH-SM-1	Iron Holder	5-11/16" (145 mm) W x 5-3/32" (130 mm) D x 10-7/32" (260 mm) H	Silver Mist	$40.60

CB Series

Wire Pullout Basket

CB-182007CR-1 & CB-182011CR-1

- Installs easily in 32 mm applications
- Easy to remove baskets
- Baskets rest on top of the full-extension slides, eliminating torque twist
- Bayonet mounting system
- Available in chrome

NOTE: * Product available in (1) or (3) packs - 100 lb. weight rated slides.

Close up of bayonet mounting system
for easy removal and re-installation

Our baskets rest upon the slide, to eliminate
the torque-twist associated
with other baskets

See page 256 for basket accessories

CB-181207CR-1
Chrome,
18" wide, 12" deep, 7" height

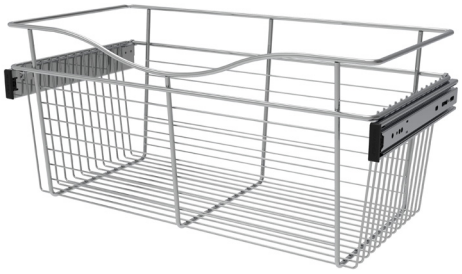

CB-241411CR-1
Chrome,
24" wide, 14" deep, 11" height

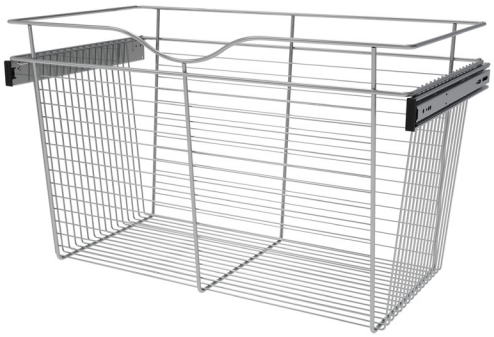

CB-301618CR-1
Chrome,
30" wide, 16" deep, 18" height

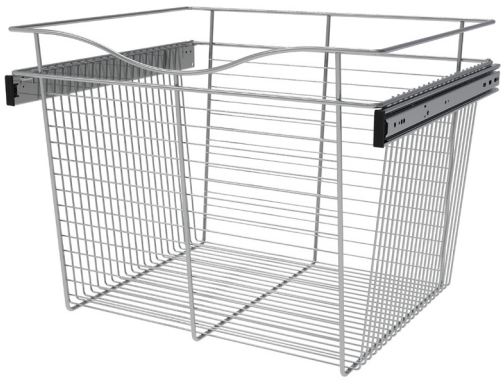

CB-242018CR-1
Chrome,
24" wide, 20" deep, 18" height

Specs on the following page

CB Series

Wire Pullout Basket

NOTE: * Product available in individual (1) or (3) packs - 100 lb. weight rated slides.

PRODUCT	DESCRIPTION	DIMS	FINISH	SLP (1)	SLP (3)
Chrome Wire Pullout Baskets—12" Deep Basket					
CB-181207CR-*	Pullout Basket	18" (457 mm) W x 12" (305 mm) D x 7" (178 mm) H	Chrome	$94.25	$73.95 ea.
CB-181211CR-*	Pullout Basket	18" (457 mm) W x 12" (305 mm) D x 11" (280 mm) H	Chrome	$100.05	$76.85 ea.
CB-181218CR-*	Pullout Basket	18" (457 mm) W x 12" (305 mm) D x 18" (457 mm) H	Chrome	$116.00	$65.40 ea.
CB-241207CR-*	Pullout Basket	24" (610 mm) W x 12" (305 mm) D x 7" (178 mm) H	Chrome	$100.05	$77.60 ea.
CB-241211CR-*	Pullout Basket	24" (610 mm) W x 12" (305 mm) D x 11" (280 mm) H	Chrome	$108.75	$92.10 ea.
CB-241218CR-*	Pullout Basket	24" (610 mm) W x 12" (305 mm) D x 18" (457 mm) H	Chrome	$129.80	$101.50 ea.
CB-301207CR-*	Pullout Basket	30" (762 mm) W x 12" (305 mm) D x 7" (178 mm) H	Chrome	$105.85	$60.75 ea.
CB-301211CR-*	Pullout Basket	30" (762 mm) W x 12" (305 mm) D x 11" (280 mm) H	Chrome	$116.00	$94.25 ea.
CB-301218CR-*	Pullout Basket	30" (762 mm) W x 12" (305 mm) D x 18" (457 mm) H	Chrome	$152.25	$89.75 ea.
Chrome Wire Pullout Baskets—14" Deep Basket					
CB-181407CR-*	Pullout Basket	18" (457 mm) W x 14" (356 mm) D x 7" (178 mm) H	Chrome	$95.70	$75.40 ea.
CB-181411CR-*	Pullout Basket	18" (457 mm) W x 14" (356 mm) D x 11" (280 mm) H	Chrome	$108.75	$85.55 ea.
CB-181418CR-*	Pullout Basket	18" (457 mm) W x 14" (356 mm) D x 18" (457 mm) H	Chrome	$129.05	$105.85 ea.
CB-241407CR-*	Pullout Basket	24" (610 mm) W x 14" (356 mm) D x 7" (178 mm) H	Chrome	$114.55	$83.40 ea.
CB-241411CR-*	Pullout Basket	24" (610 mm) W x 14" (356 mm) D x 11" (280 mm) H	Chrome	$120.35	$101.50 ea.
CB-241418CR-*	Pullout Basket	24" (610 mm) W x 14" (356 mm) D x 18" (457 mm) H	Chrome	$137.75	$121.10 ea.
CB-301407CR-*	Pullout Basket	30" (762 mm) W x 14" (356 mm) D x 7" (178 mm) H	Chrome	$123.25	$94.95 ea.
CB-301411CR-*	Pullout Basket	30" (762 mm) W x 14" (356 mm) D x 11" (280 mm) H	Chrome	$129.05	$106.60 ea.
CB-301418CR-*	Pullout Basket	30" (762 mm) W x 14" (356 mm) D x 18" (457 mm) H	Chrome	$143.55	$135.55 ea.
Chrome Wire Pullout Baskets—16" Deep Basket					
CB-181607CR-*	Pullout Basket	18" (457 mm) W x 16" (407 mm) D x 7" (178 mm) H	Chrome	$101.50	$86.25 ea.
CB-181611CR-*	Pullout Basket	18" (457 mm) W x 16" (407 mm) D x 11" (280 mm) H	Chrome	$114.55	$100.75 ea.
CB-181618CR-*	Pullout Basket	18" (457 mm) W x 16" (407 mm) D x 18" (457 mm) H	Chrome	$143.60	$120.35 ea.
CB-241607CR-*	Pullout Basket	24" (610 mm) W x 16" (407 mm) D x 7" (178 mm) H	Chrome	$114.55	$92.80 ea.
CB-241611CR-*	Pullout Basket	24" (610 mm) W x 16" (407 mm) D x 11" (280 mm) H	Chrome	$123.95	$109.45 ea.
CB-241618CR-*	Pullout Basket	24" (610 mm) W x 16" (407 mm) D x 18" (457 mm) H	Chrome	$158.05	$141.40 ea.
CB-301607CR-*	Pullout Basket	30" (762 mm) W x 16" (407 mm) D x 7" (178 mm) H	Chrome	$137.75	$112.40 ea.
CB-301611CR-*	Pullout Basket	30" (762 mm) W x 16" (407 mm) D x 11" (280 mm) H	Chrome	$143.55	$123.95 ea.
CB-301618CR-*	Pullout Basket	30" (762 mm) W x 16" (407 mm) D x 18" (457 mm) H	Chrome	$160.95	$147.15 ea.
Chrome Wire Pullout Baskets—20" Deep Basket					
CB-182007CR-*	Pullout Basket	18" (457 mm) W x 20" (508 mm) D x 7" (178 mm) H	Chrome	$134.85	$98.60 ea.
CB-182011CR-*	Pullout Basket	18" (457 mm) W x 20" (508 mm) D x 11" (280 mm) H	Chrome	$143.55	$115.25 ea.
CB-182018CR-*	Pullout Basket	18" (457 mm) W x 20" (508 mm) D x 18" (457 mm) H	Chrome	$166.75	$146.45 ea.
CB-242007CR-*	Pullout Basket	24" (610 mm) W x 20" (508 mm) D x 7" (178 mm) H	Chrome	$137.80	$112.40 ea.
CB-242011CR-*	Pullout Basket	24" (610 mm) W x 20" (508 mm) D x 11" (280 mm) H	Chrome	$143.55	$135.55 ea.
CB-242018CR-*	Pullout Basket	24" (610 mm) W x 20" (508 mm) D x 18" (457 mm) H	Chrome	$172.55	$164.55 ea.

CB-182007CR-1

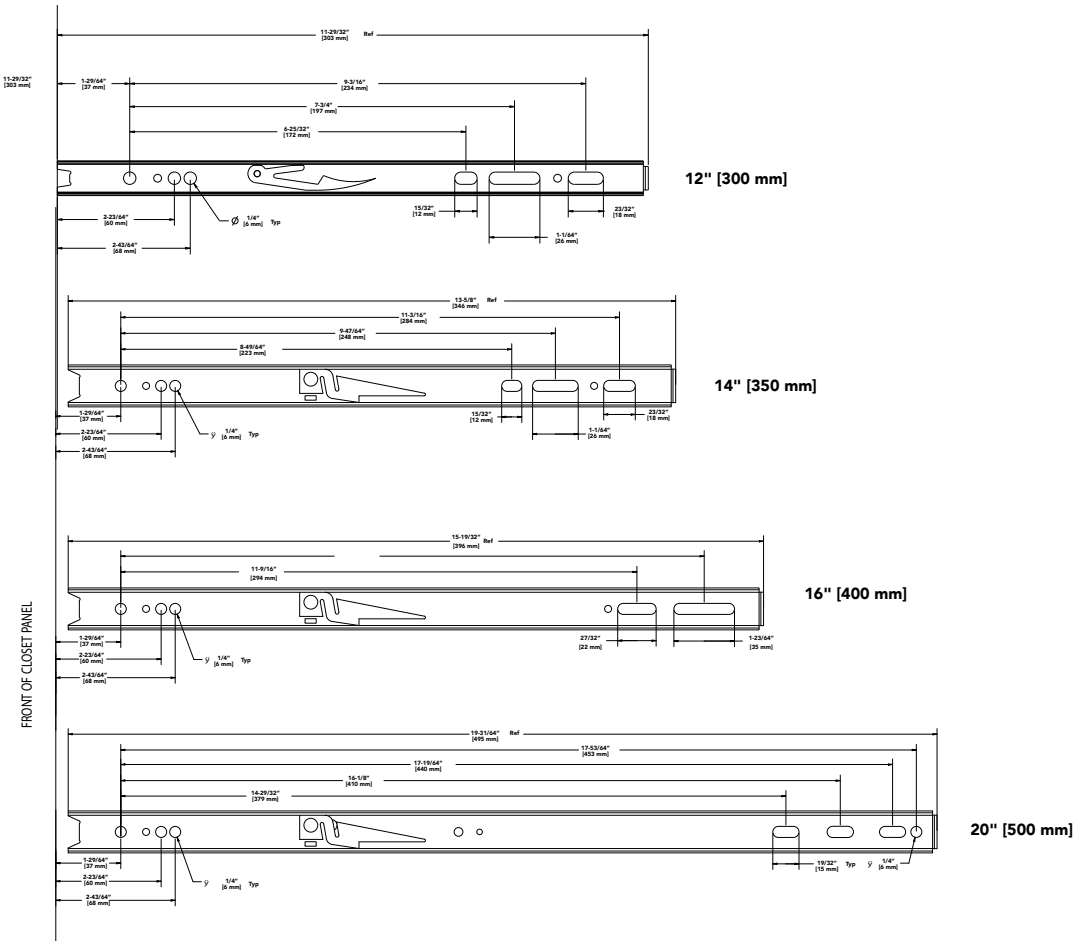

Cloth Hamper for CB Series

CHBI Series

- Designed to fit our CB Series Baskets
  CB-241418**-1/3
  CB-241618**-1/3
  CB-242018**-1/3
  CB-301418**-1/3
  CB-301618**-1/3
  ** Denotes color code
- Machine washable canvas with velcro ties
- Black coated metal handles and clips included

NOTE: * Product available in individual (1) or (3) packs.

Cloth Hamper for CB Basket

PRODUCT	DESCRIPTION	DIMS	FINISH	SLP (1)	SLP (3)
CHBI-241418-*	Cloth Hamper	21-17/32" (547 mm) W x 12-1/4" (311 mm) D x 14-15/32" (368 mm) H	Black	$68.15	$53.65 ea.
CHBI-241618-*	Cloth Hamper	21-17/32" (547 mm) W x 14-1/4" (362 mm) D x 14-15/32" (368 mm) H	Black	$70.35	$54.40 ea.
CHBI-242018-*	Cloth Hamper	21-17/32" (547 mm) W x 18-1/4" (464 mm) D x 14-15/32" (368 mm) H	Black	$82.65	$55.80 ea.
CHBI-301418-*	Cloth Hamper	27-3/8" (695 mm) W x 12-1/4" (311 mm) D x 14-15/32" (368 mm) H	Black	$79.75	$57.30 ea.
CHBI-301618-*	Cloth Hamper	27-3/8" (695 mm) W x 14-1/4" (362 mm) D x 14-15/32" (368 mm) H	Black	$83.40	$62.35 ea.

CBSL Series

Closet Basket Pullout

NEW FINISH!

- Designed for 14″ depth closet cabinets
- Available in (3) heights: 5″, 10″ or 17″ and (3) widths: 18″, 24″ or 30″
- Installs easily in 32 mm applications
- Easy to remove baskets rest securely on hooks
- Full-extension, ball-bearing slides (included)
- Available in chrome and matte black
- Canvas and plastic liners (sold separately, pg. 252)

CBSL-241405MB-1, CBSL-241410MB-1, CBSL-241417MB-1

Coated clips protect the finish, stabilize the basket and allow for easy removal and replacement

SIDELINES® by REV-A-SHELF

CBSL-181417CR-1
Chrome,
18" wide, 14" deep, 17" height

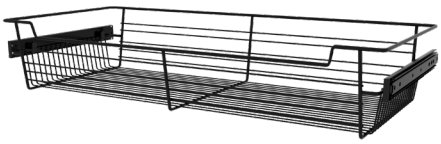

CBSL-301405MB-1
Matte Black,
30" wide, 14" deep, 5" height

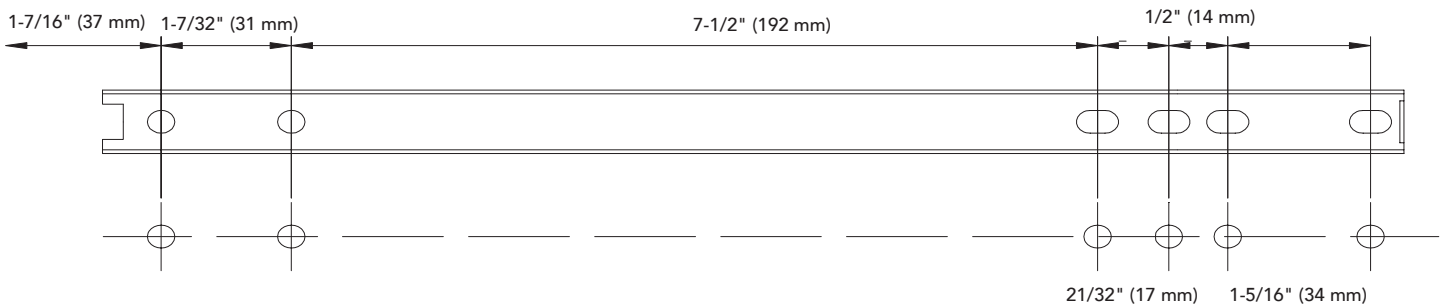

* Product available in individual (1) or (3) packs.

Closet Basket Pullout

PRODUCT	DESCRIPTION	DIMS	FINISH	SLP (1)	SLP (3)
CBSL-181405CR-*	Closet Basket Pullout	18" (457 mm) W x 14" (356 mm) D x 5-3/8" (137 mm) H	Chrome	$116.00	$97.15 ea.
CBSL-181410CR-*	Closet Basket Pullout	18" (457 mm) W x 14" (356 mm) D x 10-7/16" (265 mm) H	Chrome	$116.00	$80.90 ea.
CBSL-181417CR-*	Closet Basket Pullout	18" (457 mm) W x 14" (356 mm) D x 17" (432 mm) H	Chrome	$116.00	$80.45 ea.
CBSL-241405CR-*	Closet Basket Pullout	24" (609 mm) W x 14" (356 mm) D x 5-3/8" (137 mm) H	Chrome	$102.95	$71.35 ea.
CBSL-241410CR-*	Closet Basket Pullout	24" (609 mm) W x 14" (356 mm) D x 10-7/16" (265 mm) H	Chrome	$126.15	$91.50 ea.
CBSL-241417CR-*	Closet Basket Pullout	24" (609 mm) W x 14" (356 mm) D x 17" (432 mm) H	Chrome	$129.05	$105.70 ea.
CBSL-301405CR-*	Closet Basket Pullout	30" (762 mm) W x 14" (356 mm) D x 5-3/8" (137 mm) H	Chrome	$102.20	$68.60 ea.
CBSL-301410CR-*	Closet Basket Pullout	30" (762 mm) W x 14" (356 mm) D x 10-7/16" (265 mm) H	Chrome	$130.50	$101.05 ea.
CBSL-301417CR-*	Closet Basket Pullout	30" (762 mm) W x 14" (356 mm) D x 17" (432 mm) H	Chrome	$142.10	$121.80 ea.
CBSL-181405MB-*	Closet Basket Pullout	18" (457 mm) W x 14" (356 mm) D x 5-3/8" (137 mm) H	Matte Black	$116.00	$97.15 ea.
CBSL-181410MB-*	Closet Basket Pullout	18" (457 mm) W x 14" (356 mm) D x 10-7/16" (265 mm) H	Matte Black	$145.00	$126.15 ea.
CBSL-181417MB-*	Closet Basket Pullout	18" (457 mm) W x 14" (356 mm) D x 17" (432 mm) H	Matte Black	$168.20	$160.20 ea.
CBSL-241405MB-*	Closet Basket Pullout	24" (609 mm) W x 14" (356 mm) D x 5-3/8" (137 mm) H	Matte Black	$139.20	$118.90 ea.
CBSL-241410MB-*	Closet Basket Pullout	24" (609 mm) W x 14" (356 mm) D x 10-7/16" (265 mm) H	Matte Black	$168.20	$138.45 ea.
CBSL-241417MB-*	Closet Basket Pullout	24" (609 mm) W x 14" (356 mm) D x 17" (432 mm) H	Matte Black	$182.70	$187.05 ea.
CBSL-301405MB-*	Closet Basket Pullout	30" (762 mm) W x 14" (356 mm) D x 5-3/8" (137 mm) H	Matte Black	$153.70	$131.20 ea.
CBSL-301410MB-*	Closet Basket Pullout	30" (762 mm) W x 14" (356 mm) D x 10-7/16" (265 mm) H	Matte Black	$171.10	$155.15 ea.
CBSL-301417MB-*	Closet Basket Pullout	30" (762 mm) W x 14" (356 mm) D x 17" (432 mm) H	Matte Black	$200.10	$187.05 ea.

Basket Liners

Closet Basket Liners

- (3) variations available
  - Plastic Liner
  - Canvas Basket
  - Canvas Hamper
- Available in matte (plastic) or tan (canvas)
- Drop-in installation (plastic) or with velcro tabs (canvas)
- Canvas basket liners fit our 5", 10" and 17" tall baskets
- Canvas hamper bags fit our 18" and 24" tilt-out hampers
- Canvas hampers feature elasticized bag opening and fold-down handles
- Easy to clean
- Compatible with Sidelines By Rev-A-Shelf® baskets

CBLSL-181405-T-1

SIDELINES® by REV-A-SHELF

PRODUCT	DESCRIPTION	Dims	FINISH	SLP
Canvas Bag Liners				
CBLSL-181405-T-1	18" W x 14" D x 5" Closet Basket Liner	17-5/32" (436 mm) W x 12-11/32" (314 mm) D x 5" (127 mm) H	Tan	$29.00
CBLSL-181410-T-1	18" W x 14" D x 10" Closet Basket Liner	17-5/32" (436 mm) W x 12-11/32" (314 mm) D x 10" (254 mm) H	Tan	$30.45
CBLSL-181417-T-1	18" W x 14" D x 17" Closet Basket Liner	17-5/32" (436 mm) W x 12" (305 mm) D x 16-9/16" (421 mm) H	Tan	$32.65
CBLSL-241405-T-1	24" W x 14" D x 5" Closet Basket Liner	23-3/16" (589 mm) W x 12-11/32" (314 mm) D x 5" (127 mm) H	Tan	$33.35
CBLSL-241410-T-1	24" W x 14" D x 10" Closet Basket Liner	23-3/16" (589 mm) W x 12-11/32" (314 mm) D x 10" (254 mm) H	Tan	$36.25
CBLSL-241417-T-1	24" W x 14" D x 17" Closet Basket Liner	23-3/16" (589 mm) W x 12" (305 mm) D x 16-9/16" (421 mm) H	Tan	$41.30
CBLSL-301405-T-1	30" W x 14" D x 5" Closet Basket Liner	29-5/32" (741 mm) W x 12-11/32" (314 mm) D x 5" (127 mm) H	Tan	$33.35
CBLSL-301410-T-1	30" W x 14" D x 10" Closet Basket Liner	29-5/32" (741 mm) W x 12-11/32" (314 mm) D x 10" (254 mm) H	Tan	$36.25
CBLSL-301417-T-1	30" W x 14" D x 17" Closet Basket Liner	29-5/32" (741 mm) W x 12" (305 mm) D x 16-9/16" (421 mm) H	Tan	$42.05
Hamper Bag Liners				
CTOHLSL-16-1	19" H x 16" W x 13" D Hamper Liner	15-1/2" (394 mm) W x 12-19/32" (320 mm) D x 21-27/32" (555 mm) H	Tan	$46.40
CTOHLSL-21-1	21" H x 16" W x 13" D Hamper Liner	20-1/2" (521 mm) W x 12-19/32" (320 mm) D x 21-27/32" (555 mm) H	Tan	$52.20

Tilt-Out Hampers

CTO SERIES

- Available in chrome or black cloth varities
- Chrome is available in 18" and 24" widths and black cloth is available for 18", 24" and 30" openings
- Unique, slanted rim design for clearance with tilt-down hamper cabinet doors
- Heavy gauge 2.8 mm and 5.8 mm steel wire construction
- Flap stay and door mounting bracket hardware included
- Door hinges (sold separately)

CTOHSL-24-1

CTOHBSL-211419-CR-1
Chrome Tilt-Out Hamper
(24" version)

CTOHBSL-FS-1
Flap Stay Mechanism

Scan for video

SIDELINES® by REV-A-SHELF

Tilt-Out Hampers

PRODUCT	DESCRIPTION	DIMS	MCO	FINISH	SLP
CTOHSL-18-1	Cloth Tilt-Out Hamper for 18" Closet	16" (406 mm) W x 13-1/2" (343 mm) D x 19-1/2" (495 mm) H	18" (457 mm)	Black	$123.25
CTOHSL-24-1	Cloth Tilt-Out Hamper for 24" Closet	21" (533 mm) W x 13-1/2" (343 mm) D x 19-1/2" (495 mm) H	24" (610 mm)	Black	$130.50
CTOHSL-30-1	Cloth Tilt-Out Hamper for 30" Closet	27" (686 mm) W x 13-1/2" (343 mm) D x 19-1/2" (495 mm) H	30" (762 mm)	Black	$142.10
CTOHBSL-161419-CR-1	Tilt-Out Hamper for 18" Closet	16" (406 mm) W x 13-1/2" (343 mm) D x 19-1/2" (495 mm) H	18" (457 mm)	Chrome	$176.15
CTOHBSL-211419-CR-1	Tilt-Out Hamper for 24" Closet	21" (533 mm) W x 13-1/2" (343 mm) D x 19-1/2" (495 mm) H	24" (610 mm)	Chrome	$205.15
Accessories					
CTOHBSL-FS-1	Flap Stay for Tip-Out Hamper	1-11/16" (43 mm) W x 1-11/16" (43 mm) D x 10-1/2" (267 mm) H		Chrome	$31.90

CTOHB Series

Wire Tilt-Out Hamper

- Available in (2) sizes and (2) finishes
- Simple one-step "slide-in/ slide-out" basket removal
- Heavy duty wire construction
- 1.7 bushels (55 qt.) for the 16" wide unit
- 2.3 bushels (74 qt.) for the 21" wide unit
- Door attachment brackets
- Flap stay mechanism (sold separately)
- Canvas liner(s) available (sold separately, pg. 255)

CTOHB-161319-CR-52

CTOHB-211319-CR-52
Chrome, 2.3 BU Hamper

CTOHBSL-FS-1
Flap Stay Mechanism
(Sold Separately)

Wire Tilt-Out Hamper

PRODUCT	DESCRIPTION	DIMS	MCO	FINISH	SLP
CTOHB-161319-CR-52	1.7 BU Hamper	15-1/2" (394 mm) W x 13-1/2" (343 mm) D x 19-3/4" (502 mm) H	16-1/2" (419 mm)	Chrome	$137.75
CTOHB-211319-CR-52	2.3 BU Hamper	20-1/2" (521 mm) W x 13-1/2" (343 mm) D x 19-3/4" (502 mm) H	21-1/2" (546 mm)	Chrome	$155.90
CTOHB-161319-SN-52	1.7 BU Hamper	15-1/2" (394 mm) W x 13-1/2" (343 mm) D x 19-3/4" (502 mm) H	16-1/2" (419 mm)	Satin Nickel	$159.50
CTOHB-211319-SN-52	2.3 BU Hamper	20-1/2" (521 mm) W x 13-1/2" (343 mm) D x 19-3/4" (502 mm) H	21-1/2" (546 mm)	Satin Nickel	$159.50
Accessories					
CTOHBSL-FS-1	Flap Stay for Tilt-Out Hamper	1-11/16" (43 mm) W x 10-1/2" (267 mm) H		Chrome	$31.90

Cloth Liners for CTOHB Series

CTOHB-21-I-1

- Designed for our CTOHB Series hampers
- Machine washable canvas bag
- 1.7 bushels (55 qt.) for the 16" wide unit
- 2.3 bushels (74 qt.) for the 21" wide unit
- Designed to fit tight and securely with hook and loop fasteners
- Strong handles for easy transport and removal

Available in Black and Tan

Built-in handle

Cloth Liner for CTOHB

PRODUCT	DESCRIPTION		FINISH	SLP
CTOHB-16-I-1	1.7 BU Cloth Liner for CTOHB-161319	14-15/32" (368 mm) W x 12-5/32" (309 mm) D x 19-1/32" (483 mm) H	Black	$43.65
CTOHB-21-I-1	2.3 BU Cloth Liner for CTOHB-211319	19-15/32" (495 mm) W x 12-5/32" (309 mm) D x 19-1/32" (483 mm) H	Black	$47.70
CTOHT-16-I-1	1.7 BU Cloth Liner for CTOHB-161319	14-15/32" (368 mm) W x 12-5/32" (309 mm) D x 19-1/32" (483 mm) H	Tan	$60.90
CTOHT-21-I-1	2.3 BU Cloth Liner for CTOHB-211319	19-15/32" (495 mm) W x 12-5/32" (309 mm) D x 19-1/32" (483 mm) H	Tan	$63.80

CSWBRSL Series Premier Swivel Belt Rack

NEW FINISH!

- Fits panel depths of 14" or greater
- Holds up to (7) belts
- Over-extension, ball-bearing, steel slide with pivoting roller hinge
- Locks in place after pivoting
- Cast aluminum slide housing
- Non-slip soft PVC coated pegs
- Available in matte black, chrome, satin chrome or satin nickel
- US Patent No. 8,028,844 B2
- Reversible (left or right mount)

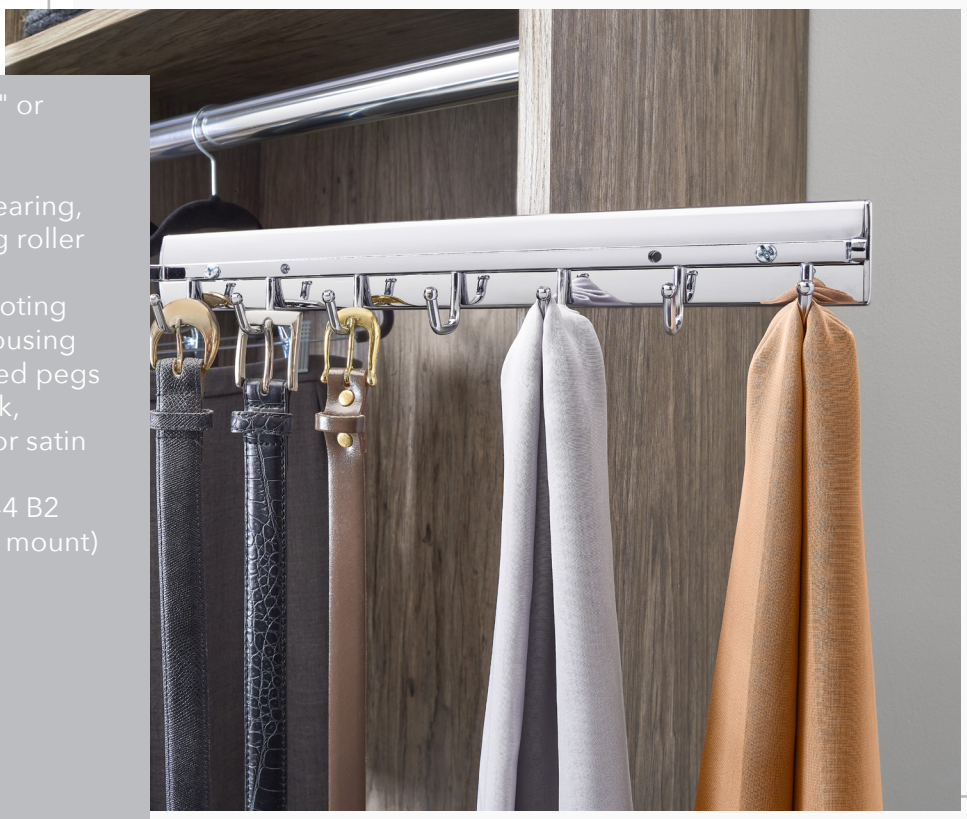

CSWBRSL-14-CR-1

CSWBRSL-14-MB-1
Premier Swivel Belt Rack
(Matte Black finish)

CSWBRSL-14-SN-1
Premier Swivel Belt Rack
(Satin Nickel finish)

CSWBRSL-14-SC-1
Premier Swivel Belt Rack
(Satin Chrome finish)

SIDELINES® by REV-A-SHELF

Premier Swivel Belt Rack

PRODUCT	DESCRIPTION	DIMS	FINISH	SLP
CSWBRSL-14-CR-1	14" Premier Swivel Belt Rack	2-15/32" (63 mm) W x 13-11/16" (348 mm) D x 2-1/4" (57 mm) H	Chrome	$111.65
CSWBRSL-14-MB-1	14" Premier Swivel Belt Rack	2-15/32" (63 mm) W x 13-11/16" (348 mm) D x 2-1/4" (57 mm) H	Matte Black	$108.75
CSWBRSL-14-SN-1	14" Premier Swivel Belt Rack	2-15/32" (63 mm) W x 13-11/16" (348 mm) D x 2-1/4" (57 mm) H	Satin Nickel	$111.65
CSWBRSL-14-SC-1	14" Premier Swivel Belt Rack	2-15/32" (63 mm) W x 13-11/16" (348 mm) D x 2-1/4" (57 mm) H	Satin Chrome	$66.85

Premier Swivel Tie Rack

CSWTRSL Series

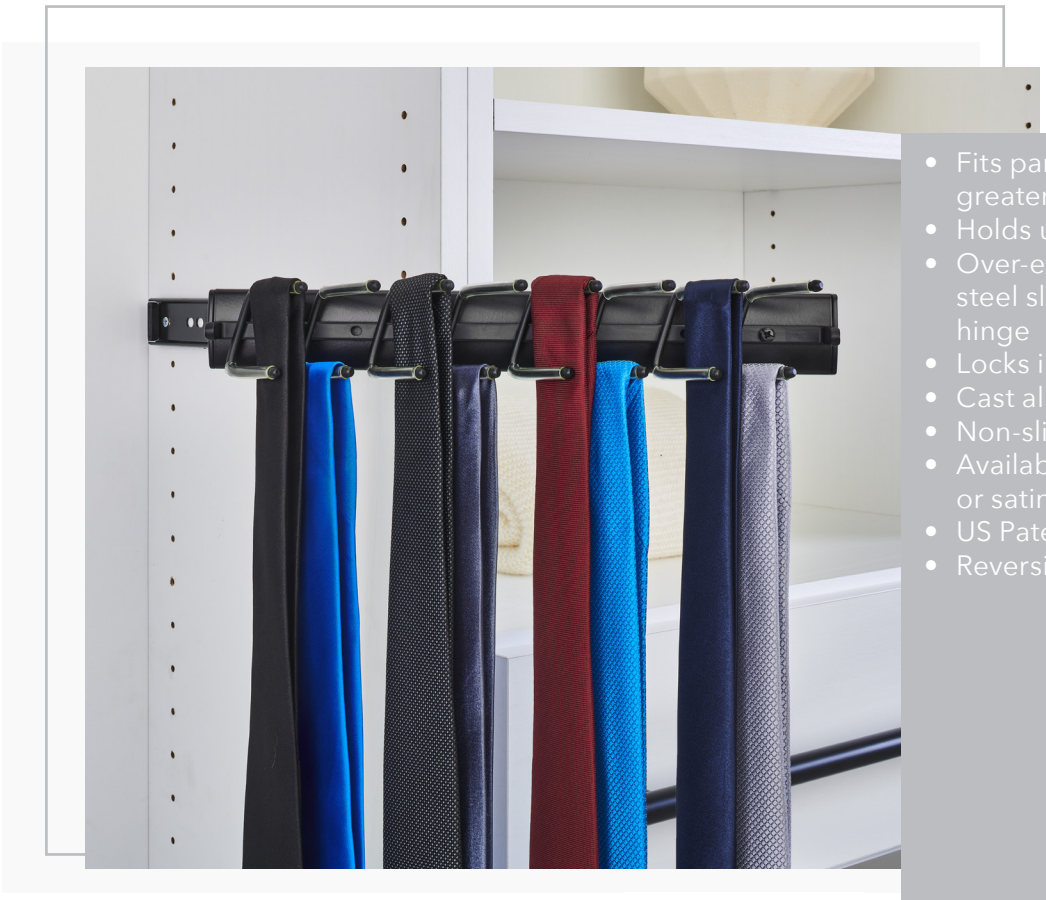

CSWTRSL-14-BZ-1

- Fits panel depths of 14" or greater
- Holds up to (16) ties
- Over-extension, ball-bearing, steel slide with pivoting roller hinge
- Locks in place after pivoting
- Cast aluminum slide housing
- Non-slip soft PVC coated pegs
- Available in chrome, matte black or satin nickel
- US Patent No. 8,028,844 B2
- Reversible (left or right mount)

CSWTRSL-14-MB-1
Premier Swivel Tie Rack
(Matte Black finish)

CSWTRSL-14-SN-1
Premier Swivel Tie Rack
(Satin Nickel finish)

SIDELINES® by REV-A-SHELF

Premier Swivel Tie Rack

PRODUCT	DESCRIPTION	DIMS	FINISH	SLP
CSWTRSL-14-CR-1	14" Premier Swivel Tie Rack	2-17/32" (65 mm) W x 13-11/16" (348 mm) D x 2" (51 mm) H	Chrome	$107.30
CSWTRSL-14-MB-1	14" Premier Swivel Tie Rack	2-17/32" (65 mm) W x 13-11/16" (348 mm) D x 2" (51 mm) H	Matte Black	$104.40
CSWTRSL-14-SN-1	14" Premier Swivel Tie Rack	2-17/32" (65 mm) W x 13-11/16" (348 mm) D x 2" (51 mm) H	Satin Nickel	$107.30

CBRSL Series

Deluxe Slide Belt Rack

NEW FINISH!

- Full-extension, ball-bearing, steel slide with steel rack housing
- Fits panel depths of 14" or greater
- 10 mm diameter rod extends 8"
- Holds up to (7) belts
- Available in matte black, chrome or satin nickel
- Coordinates with Sidelines By Rev-A-Shelf® Deluxe Tie and Scarf Racks

CBRSL-14-SN-1

CBRSL-14-MB-1
Deluxe Slide Belt Rack
(Matte Black finish)

CBRSL-14-CR-1
Deluxe Slide Belt Rack
(Chrome finish)

SIDELINES® by REV-A-SHELF

Deluxe Slide Belt Rack

PRODUCT	DESCRIPTION	DIMS	FINISH	SLP
CBRSL-14-CR-1	14" Deluxe Slide Belt Rack	2-7/32" (56 mm) W x 13-25/32" (350 mm) D x 3-7/16" (87 mm) H	Chrome	$83.40
CBRSL-14-MB-1	14" Deluxe Slide Belt Rack	2-7/32" (56 mm) W x 13-25/32" (350 mm) D x 3-7/16" (87 mm) H	Matte Black	$81.90
CBRSL-14-SN-1	14" Deluxe Slide Belt Rack	2-7/32" (56 mm) W x 13-25/32" (350 mm) D x 3-7/16" (87 mm) H	Satin Nickel	$83.40

Deluxe Slide Tie Rack

CTRSL Series

CTRSL-14-SN-1

- Full-extension, ball-bearing, steel slide with steel rack housing
- Fits panel depths of 14" or greater
- 10 mm diameter rod extends 8"
- Holds up to (16) ties
- Available in matte black, chrome or satin nickel
- Coordinates with Sidelines By Rev-A-Shelf® Deluxe Belt and Scarf Racks

CTRSL-14-CR-1
Deluxe Slide Tie Rack
(*Chrome finish*)

CTRSL-14-MB-1
Deluxe Slide Tie Rack
(Matte Black *finish*)

SIDELINES® by REV-A-SHELF

Deluxe Slide Tie Rack

PRODUCT	DESCRIPTION	DIMS	FINISH	SLP
CTRSL-14-CR-1	14" Deluxe Slide Tie Rack	2-5/16" (59 mm) W x 13-25/32" (350 mm) D x 3-3/32" (79 mm) H	Chrome	$82.65
CTRSL-14-MB-1	14" Deluxe Slide Tie Rack	2-5/16" (59 mm) W x 13-25/32" (350 mm) D x 3-3/32" (79 mm) H	Matte Black	$79.75
CTRSL-14-SN-1	14" Deluxe Slide Tie Rack	2-5/16" (59 mm) W x 13-25/32" (350 mm) D x 3-3/32" (79 mm) H	Satin Nickel	$82.65

CSFRSL Series

Deluxe Slide Scarf Rack

- Fits 14" deep or greater cabinetry
- Steel construction, (7) loops
- Full-extension, ball-bearing slide
- Universal left or right mount (screws provided)
- Coordinates w/ other Sidelines By Rev-A-Shelf® Deluxe Accessories

Deluxe Slide Scarf Rack

PRODUCT	DESCRIPTION	DIMS	FINISH	SLP
CSFRSL-14-CR-1	14" Deluxe Slide Scarf Rack	1-3/4" (45 mm) W x 13-25/32" (350 mm) D x 4-1/8" (105 mm) H	Chrome	$73.95

Side Mount Belt Rack

BRC Series

BRC-14CR

- Available in 12" and 14" depths
- Available in chrome and matte black
- Holds up to (9) belts
- Full-extension, ball-bearing slide

BRC-14CR
14" Matte Black
Belt Rack

BRC-14CR
14" Chrome
Belt Rack

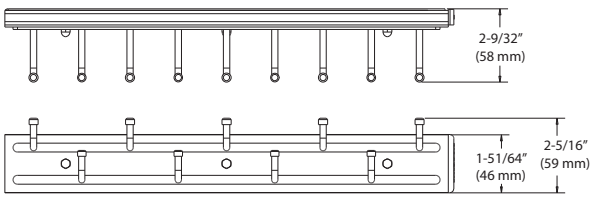

DEPTH	BELTS
12"	7
14"	9

Side Mount Belt Rack

PRODUCT	DESCRIPTION	DIMS	FINISH	SLP
12" Side Mount Belt Rack				
BRC-12CR	Belt Rack	2-1/2" (64 mm) W x 12" (305 mm) D x 1-7/8" (48 mm) H	Chrome	$33.05
BRC-12MB	Belt Rack	2-1/2" (64 mm) W x 12" (305 mm) D x 1-7/8" (48 mm) H	Matte Black	$33.05
14" Side Mount Belt Rack				
BRC-14CR	Belt Rack	2-1/2" (64 mm) W x 14" (356 mm) D x 1-7/8" (48 mm) H	Chrome	$31.90
BRC-14MB	Belt Rack	2-1/2" (64 mm) W x 14" (356 mm) D x 1-7/8" (48 mm) H	Matte Black	$31.90

BRCSL Series

Wall Mount Belt Rack

- Fits panel depths of 14" or greater
- Holds up to (7) belts
- Reversible (left or right mount)
- 14" long
- Easy installation with (2) screws

SIDELINES® by REV-A-SHELF

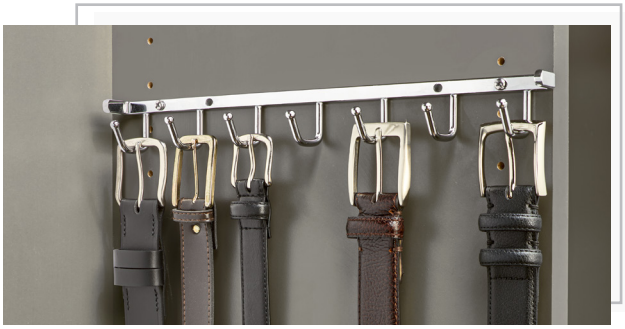

Wall Mount Belt Rack

PRODUCT	DESCRIPTION	DIMS	FINISH	SLP
BRCSL-14NS-CR-1	14" Wall Mount Belt Rack	1-15/32" (37 mm) W x 13-7/16" (342 mm) D x 1-9/16" (40 mm) H	Chrome	$29.70

TRCSL Series

Wall Mount Tie Rack

- Fits panel depths of 14" or greater
- Holds up to (16) ties
- Reversible (left or right mount)
- 14" long
- Easy installation with (2) screws

SIDELINES® by REV-A-SHELF

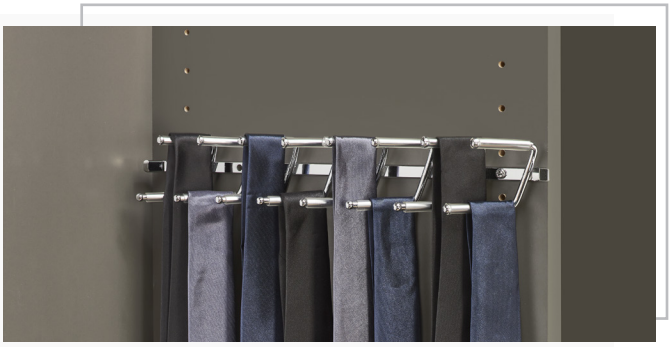

Wall Mount Tie Rack

PRODUCT	DESCRIPTION	DIMS	FINISH	SLP
TRCSL-14NS-CR-1	14" Wall Mount Tie Rack	1-19/32" (41 mm) W x 13-7/16" (342 mm) D x 2" (51 mm) H	Chrome	$39.15

CSFRSL Series

Deluxe Slide Scarf Rack

- Fits 14" deep or greater cabinetry
- Steel construction, (7) loops
- Full-extension, ball-bearing slide
- Universal left or right mount (screws provided)
- Coordinates w/ other Sidelines By Rev-A-Shelf® Deluxe Accessories

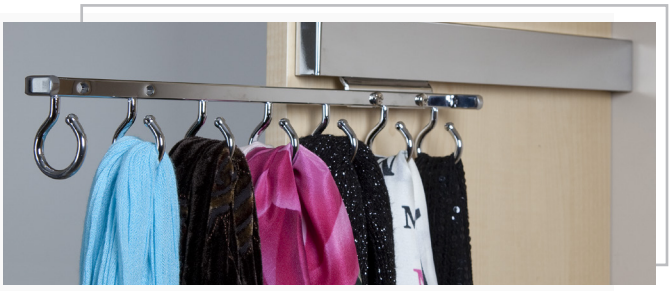

SIDELINES® by REV-A-SHELF

Deluxe Slide Scarf Rack

PRODUCT	DESCRIPTION	DIMS	FINISH	SLP
CSFRSL-14-CR-1	14" Deluxe Slide Scarf Rack	1-3/4" (45 mm) W x 13-25/32" (350 mm) D x 4-1/8" (105 mm) H	Chrome	$73.95

Closet Rod & Caps

CRSL Series

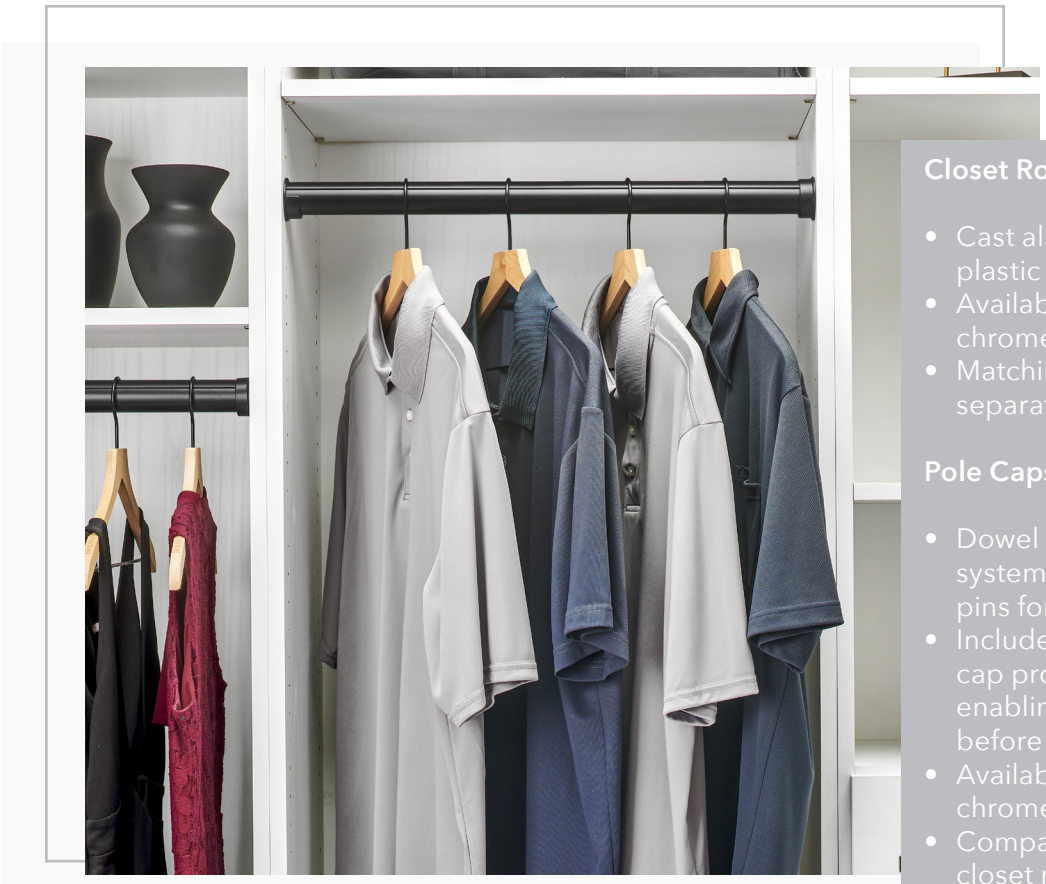

CRSL-96-MB-1

NEW FINISH!

Closet Rods

- Cast aluminum with integrated plastic pole guard
- Available in matte black, bronze, chrome or satin nickel
- Matching pole caps (sold separately)

Pole Caps

- Dowel mount: 32 mm closet system flange with 5 mm dowel pins for easy adjustments
- Includes (1) open & (1) closed cap providing stability and enabling you to install them before inserting a closet rod
- Available in matte block bronze, chrome or satin nickel
- Compatible with 1-5/8" diameter closet rod (sold separately)
- Perfect for closets and bathrooms

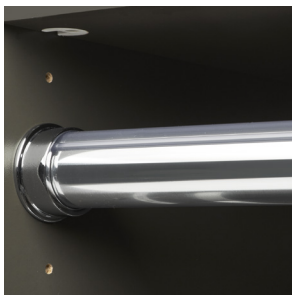

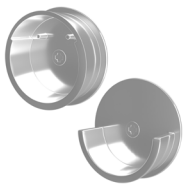

CRCSL-CR-1
Closet Rod Cap
(Chrome finish)

SIDELINES® by REV-A-SHELF

Closet Rod				
PRODUCT	DESCRIPTION	DIMS	FINISH	SLP
CRSL-96-CR-1	Closet Rod	96" (2438 mm) W x 1-15/32" (37 mm) D x 1-1/2" (37 mm) H	Chrome	$145.00
CRSL-96-MB-1	Closet Rod	96" (2438 mm) W x 1-15/32" (37 mm) D x 1-1/2" (37 mm) H	Matte Black	$145.00
CRSL-96-SN-1	Closet Rod	96" (2438 mm) W x 1-15/32" (37 mm) D x 1-1/2" (37 mm) H	Satin Nickel	$145.00
(2) Closet Rod Caps				
CRCSL-CR-1	Closet Rod Caps	11/16" (18 mm) W x 2" (51 mm) D x 2" (51 mm) H	Chrome	$14.50
CRCSL-MB-1	Closet Rod Caps	11/16" (18 mm) W x 2" (51 mm) D x 2" (51 mm) H	Matte Black	$14.50
CRCSL-SN-1	Closet Rod Caps	11/16" (18 mm) W x 2" (51 mm) D x 2" (51 mm) H	Satin Nickel	$14.50

TRC Series

Static Tie Rack

- Available in chrome
- Holds up to (23) ties
- Easy installation

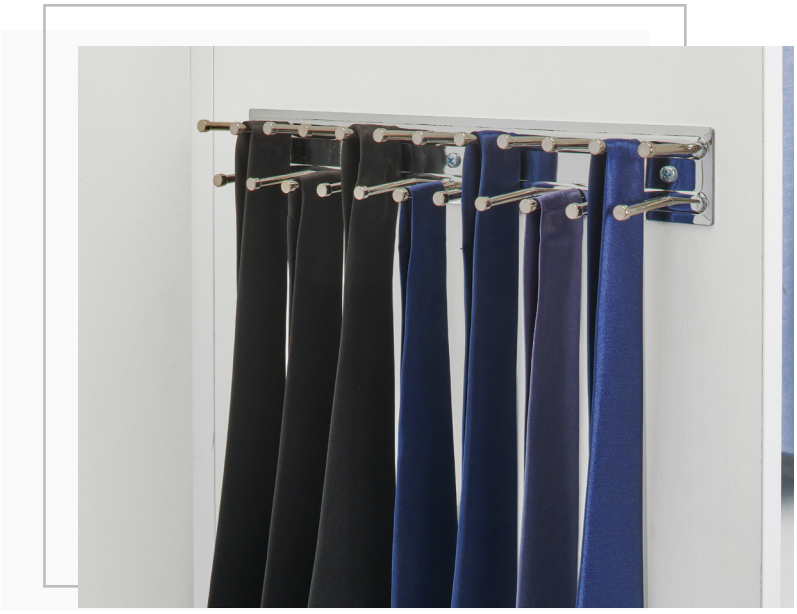

Static Tie Rack

PRODUCT	DESCRIPTION	DIMS	FINISH	SLP
TRC-12NS-CR	Static Tie Rack	1-7/8" (48 mm) W x 11-3/4" (298 mm) D x 1-3/4" (44 mm) H	Chrome	$24.65

BRC Series

Static Belt Rack

- Available in chrome
- Holds up to (7) belts
- Easy installation

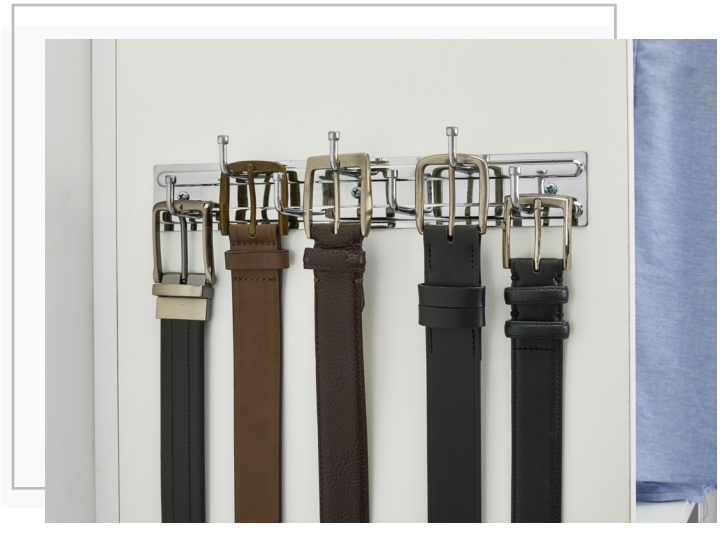

Static Belt Rack

PRODUCT	DESCRIPTION	DIMS	FINISH	SLP
BRC-12NS-CR	Static Belt Rack	1-7/8" (48 mm) W x 11-3/4" (298 mm) D x 1-3/4" (44 mm) H	Chrome	$20.30

Side Mount Tie Rack

TRC Series

NEW FINISH!

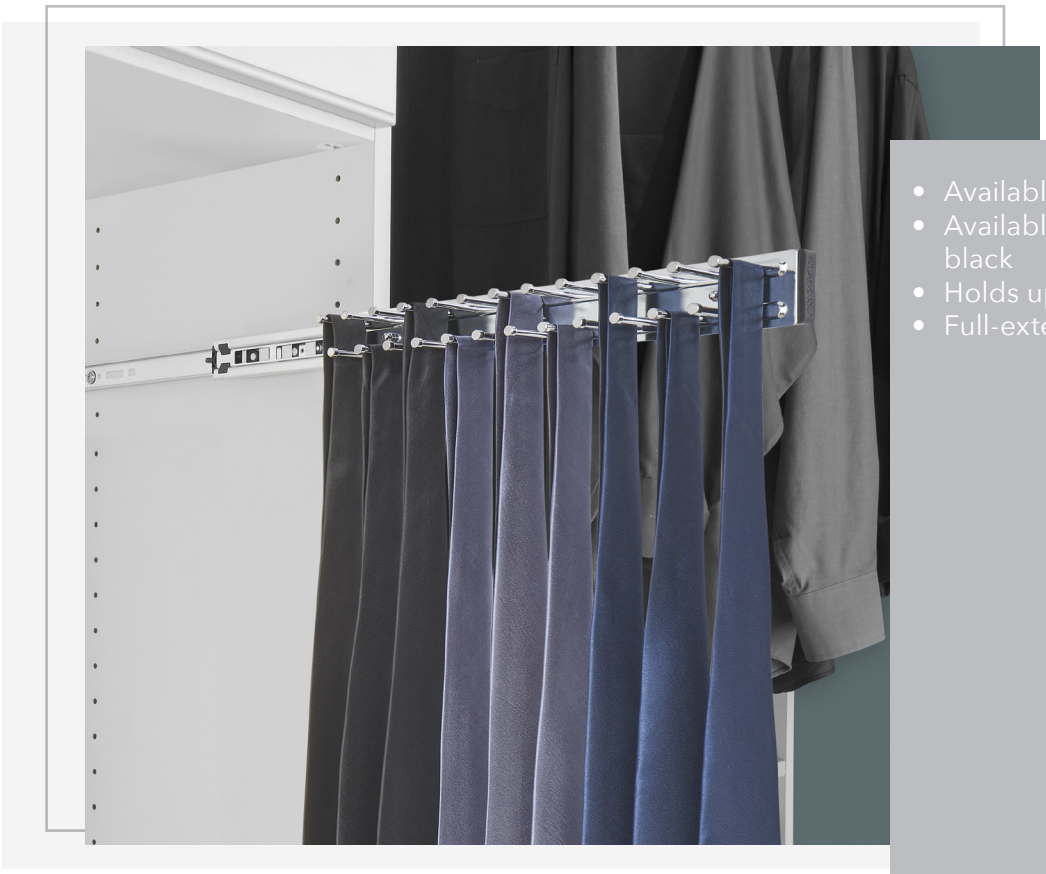

TRC-14CR

- Available in 12" and 14" depths
- Available in chrome and matte black
- Holds up to (25) ties
- Full-extension, ball-bearing slide

TRC-12CR
12" Chrome

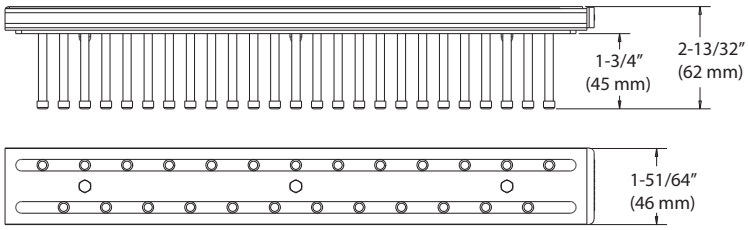

DEPTH	TIES
12"	23
14"	25

Side Mount Tie Rack

PRODUCT	DESCRIPTION	DIMS	FINISH	SLP
12" Side Mount Tie Rack				
TRC-12CR	Tie Rack	2-1/2" (64 mm) W x 12" (305 mm) D x 1-7/8" (48 mm) H	Chrome	$33.35
TRC-12MB	Tie Rack	2-1/2" (64 mm) W x 12" (305 mm) D x 1-7/8" (48 mm) H	Matte Black	$32.65
14" Side Mount Tie Rack				
TRC-14CR	Tie Rack	2-1/2" (64 mm) W x 14" (356 mm) D x 1-7/8" (48 mm) H	Chrome	$37.00
TRC-14CR	Tie Rack	2-1/2" (64 mm) W x 14" (356 mm) D x 1-7/8" (48 mm) H	Matte Black	$29.99

CVLSL Series

Telescoping Valet Rod

- Cast aluminum rack housing
- Two sizes, 12" or 14"
- Fits panel depths of 12" or greater
- 10 mm diameter rod extends 9.5"
- Holds up to 35 lbs.
- Available in matte black, chrome or satin nickel
- Coordinates with Sidelines By Rev-A-Shelf® Tie, Belt and Scarf Accessory Racks

NEW FINISH!

SIDELINES® by REV-A-SHELF

Telescoping Valet Rod

PRODUCT	DESCRIPTION	DIMS	FINISH	SLP
CVLSL-14-CR-1	14" Telescoping Valet Rod	29/32" (23 mm) W x 13-3/4" (349 mm) D x 1-9/16" (40 mm) H	Chrome	$81.20
CVLSL-14-MB-1	14" Telescoping Valet Rod	29/32" (23 mm) W x 13-3/4" (349 mm) D x 1-9/16" (40 mm) H	Matte Black	$79.00
CVLSL-14-SN-1	14" Telescoping Valet Rod	29/32" (23 mm) W x 13-3/4" (349 mm) D x 1-9/16" (40 mm) H	Satin Nickel	$81.20

CVLPOSL Series

Pop-Out Valet Rod

- One-touch pop-out mechanism
- Cast aluminum rack housing
- Fits panel depths of 14" or greater
- 10 mm diameter rod extends 7.5"
- Holds up to 35 lbs.
- Available in matte black, chrome or satin nickel
- Coordinates with Sidelines By Rev-A-Shelf® Tie, Belt and Scarf Accessory Racks

NEW FINISH!

SIDELINES® by REV-A-SHELF

Pop-Out Valet Rod

PRODUCT	DESCRIPTION	DIMS	FINISH	SLP
CVLPOSL-12-CR-1	12" Pop-Out Valet Rod	29/32" (23 mm) W x 11-25/32" (299 mm) D x 1-9/16" (40 mm) H	Chrome	$101.50
CVLPOSL-14-CR-1	14" Pop-Out Valet Rod	29/32" (23 mm) W x 13-3/4" (349 mm) D x 1-9/16" (40 mm) H	Chrome	$104.40
CVLPOSL-14-MB-1	14" Pop-Out Valet Rod	29/32" (23 mm) W x 13-3/4" (349 mm) D x 1-9/16" (40 mm) H	Matte Black	$102.95
CVLPOSL-14-SN-1	14" Pop-Out Valet Rod	29/32" (23 mm) W x 13-3/4" (349 mm) D x 1-9/16" (40 mm) H	Satin Nickel	$104.40

Deluxe Slide Valet Rod

CVRSL Series

NEW FINISH!

- Full-extension, ball-bearing, steel slide with steel rack housing
- Fits panel depths of 14" or greater
- 10 mm diameter rod extends 8"
- Holds up to 45 lbs.
- Available in matte black, chrome or satin nickel
- Coordinates with Sidelines By Rev-A-Shelf® Deluxe Tie, Belt and Scarf Racks

SIDELINES® by REV-A-SHELF

Deluxe Slide Valet Rod

PRODUCT	DESCRIPTION	DIMS	FINISH	SLP
CVRSL-14-CR-1	14" Deluxe Slide Valet Rod	1-5/32" (29 mm) W x 13-25/32" (350 mm) D x 3-5/32" (81 mm) H	Chrome	$69.60
CVRSL-14-MB-1	14" Deluxe Slide Valet Rod	1-5/32" (29 mm) W x 13-25/32" (350 mm) D x 3-5/32" (81 mm) H	Matte Black	$68.15
CVRSL-14-SN-1	14" Deluxe Slide Valet Rod	1-5/32" (29 mm) W x 13-25/32" (350 mm) D x 3-5/32" (81 mm) H	Satin Nickel	$69.60

Adjustable Laundry Valet Rod

CLVSL Series

NEW FINISH!

- Steel construction
- Mounting-screws provided
- Extends out to 11"
- Holds up to 35 lbs.
- Available in matte black, chrome or satin nickel

SIDELINES® by REV-A-SHELF

Adjustable Laundry Valet Rod

PRODUCT	DESCRIPTION	DIMS	FINISH	SLP
CLVSL-MB-1	Laundry Valet Rod	2-15/16" (75 mm) W x 10-29/32" (277 mm) D x 2-15/16" (75 mm) H	Matte Black	$49.30
CLVSL-CR-1	Laundry Valet Rod	2-15/16" (75 mm) W x 10-29/32" (277 mm) D x 2-15/16" (75 mm) H	Chrome	$50.75
CLVSL-SN-1	Laundry Valet Rod	2-15/16" (75 mm) W x 10-29/32" (277 mm) D x 2-15/16" (75 mm) H	Satin Nickel	$50.75

CVL Series

Standard Valet Rod

- Installs easily with only (4) screws
- Available in chrome and matte black
- Unique removable pull
- Mounting bracket

NEW FINISH!

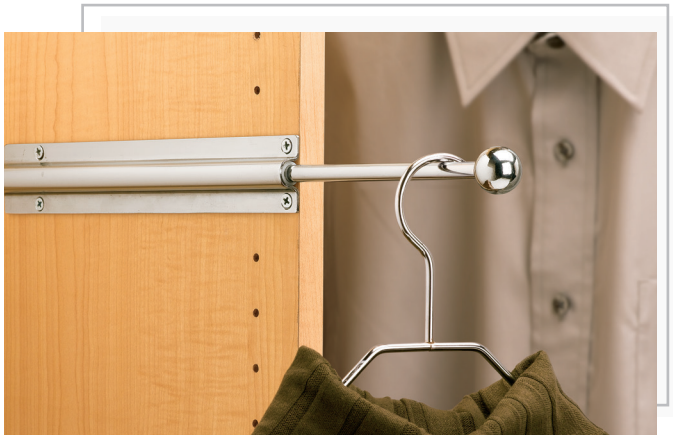

CVL-12-CR

Note: Rod pulls out 6"

CVL-12-CR
Chrome

CVL-12-MB
Matte Black

Standard Valet Rod

PRODUCT	DESCRIPTION	DIMS	FINISH	SLP
CVL-12-CR	Standard Valet Rod	31/32" (25 mm) W x 11-7/8" (302 mm) D x 1-5/8" (41 mm) H	Chrome	$30.45
CVL-12-MB	Standard Valet Rod	31/32" (25 mm) W x 11-7/8" (302 mm) D x 1-5/8" (41 mm) H	Matte Black	$29.70

CVRI Series

Insert Valet Rod

- Ability to open or close the 3-3/4" rod with a single finger
- Removable pull hardware
- Designed to fit within 3/4" and larger closet panels
- Use the drill guide (sold separately) for a perfect fit and stability

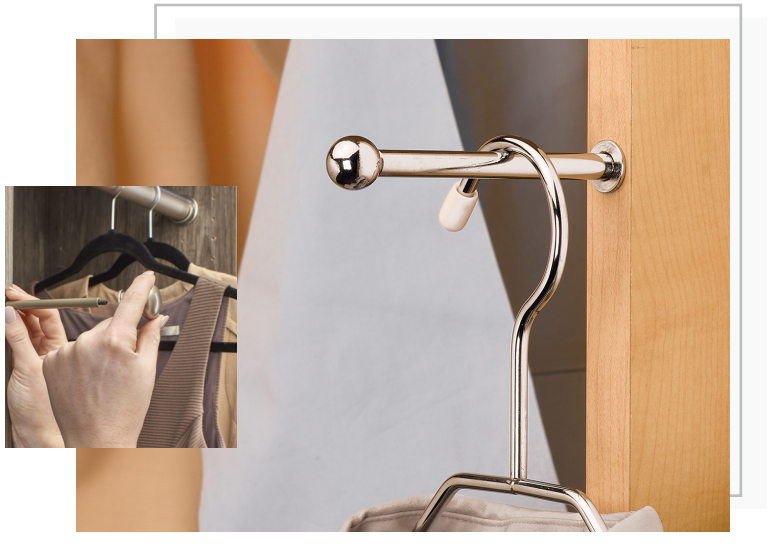

CVRI-7-CR

Note: Rod pulls out 3-1/2"

Closet Valet Rod

PRODUCT	DESCRIPTION	DIMS	FINISH	SLP
CVRI-7-CR	Insert Valet Rod	5/8" (16 mm) W x 7-9/16 - 7-3/8" (95 - 187 mm) D x 5/8" (16 mm) H	Chrome	$27.55
CVRI-DG	Drill Guide w/ Bit	Designed to simplify drilling for the installation of this product, 1/2" drill bit included.		$145.00

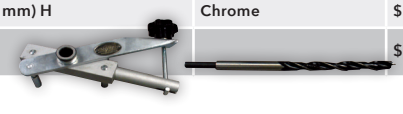

Designer Series Valet Rod

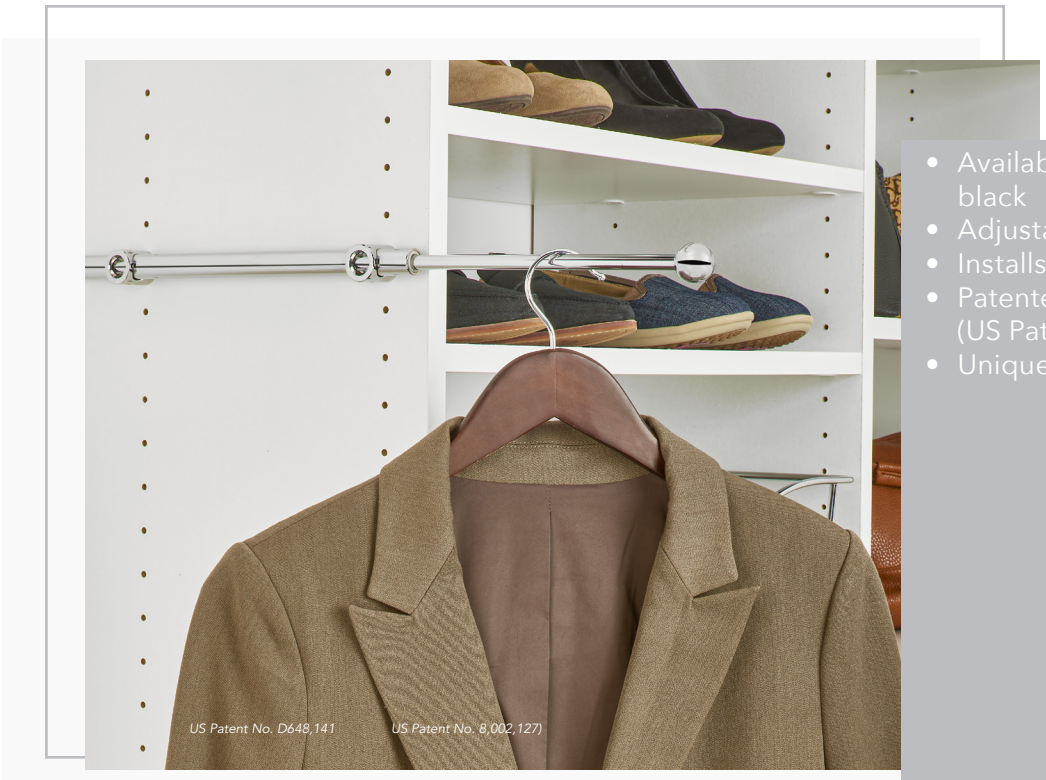

CVR-14-CR

NEW FINISH!

- Available in chrome and matte black
- Adjustable mounting brackets
- Installs easily with only (2) screws
- Patented design (US Patent No. D648,141)
- Unique removable pull

Simple Installation

CVR-12-CR
12" Chrome

CVR-14-MB
14" Matte Black

Note: 12" Rod pulls out 6-27/32"
14" Rod pulls out 8"

Designer Series Valet Rod

PRODUCT	DESCRIPTION	DIMS	FINISH	SLP
12" Designer Series Valet Rod				
CVR-12-CR	Designer Series Valet Rod	1-1/8" (32 mm) W x 11-13/16 - 18-5/8" (302 - 470 mm) D x 1" (25 mm) H	Chrome	$34.80
CVR-12-MB	Designer Series Valet Rod	1-1/8" (32 mm) W x 11-13/16 - 18-5/8" (302 - 470 mm) D x 1" (25 mm) H	Matte Black	$33.35
14" Designer Series Valet Rod				
CVR-14-CR	Designer Series Valet Rod	1-1/8" (32 mm) W x 13-13/16 - 21-13/16" (352 - 556 mm) D x 1" (25 mm) H	Chrome	$37.70
CVR-14-MB	Designer Series Valet Rod	1-1/8" (32 mm) W x 13-13/16 - 21-13/16" (352 - 556 mm) D x 1" (25 mm) H	Matte Black	$36.25

PSCSL Series

Pant Rack Pullout

NEW FINISH!

- (3) models to fit 18", 24" and 30" section widths, all 14"+ deep
- (8), (12) or (15) non-slip storage hanger arms
- Full-extension, ball-bearing w/ soft-close
- Available in matte black or satin nickel
- Steel construction, cast aluminum slide housing
- Installs with (4) screws, a fully-assembled unit

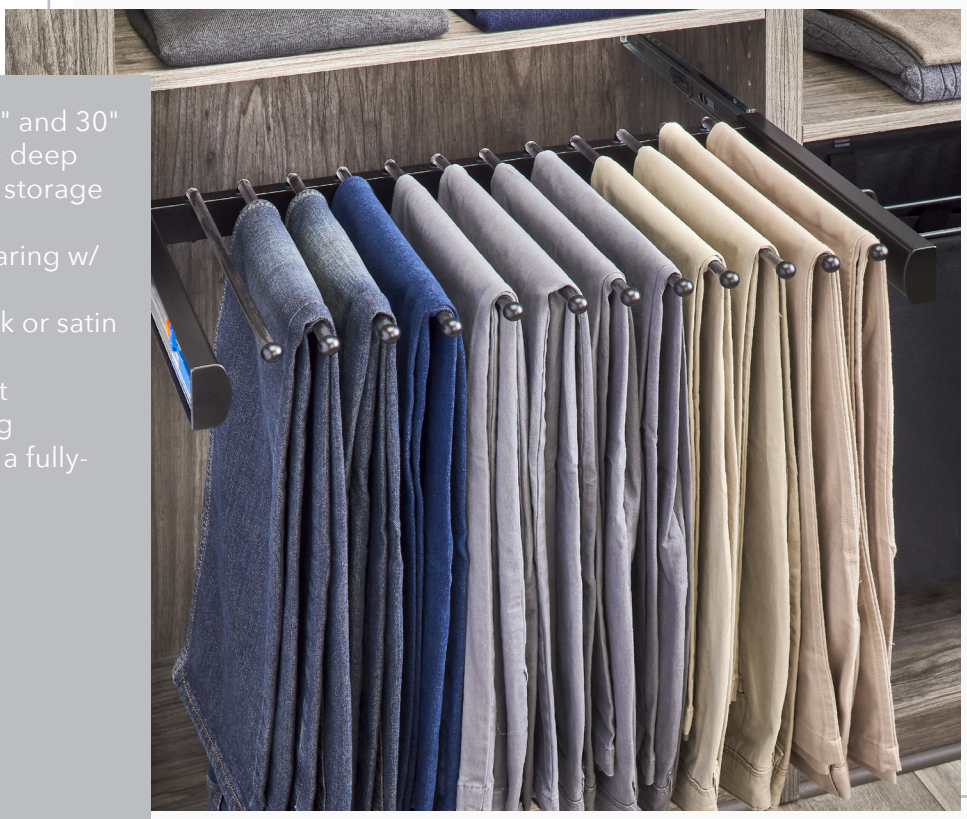

PSCSL-2414SC-MB-1

SIDELINES® by REV-A-SHELF®

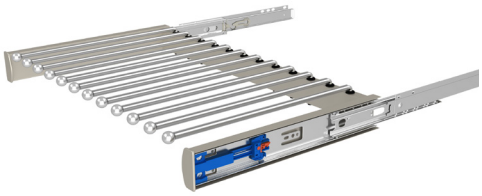

PSCSL-2414SC-SN-1
13-Capacity

Soft-Close Pant Rack Pullout

PRODUCT	DESCRIPTION	DIMS	FINISH	SLP
PSCSL-1814SC-MB-1	18" W Pant Rack Pullout	18" (457 mm) W x 14" (356 mm) D x 2-1/2" (64 mm) H	Matte Black	$274.05
PSCSL-2414SC-MB-1	24" W Pant Rack Pullout	24" (610 mm) W x 14" (356 mm) D x 2-1/2" (64 mm) H	Matte Black	$281.30
PSCSL-3014SC-MB-1	30" W Pant Rack Pullout	30" (762 mm) W x 14" (356 mm) D x 2-1/2" (64 mm) H	Matte Black	$334.20
PSCSL-1814SC-SN-1	18" W Pant Rack Pullout	18" (457 mm) W x 14" (356 mm) D x 2-1/2" (64 mm) H	Satin Nickel	$276.95
PSCSL-2414SC-SN-1	24" W Pant Rack Pullout	24" (610 mm) W x 14" (356 mm) D x 2-1/2" (64 mm) H	Satin Nickel	$287.10
PSCSL-3014SC-SN-1	30" W Pant Rack Pullout	30" (762 mm) W x 14" (356 mm) D x 2-1/2" (64 mm) H	Satin Nickel	$342.20

Pant Rack Pullout

PSC Series

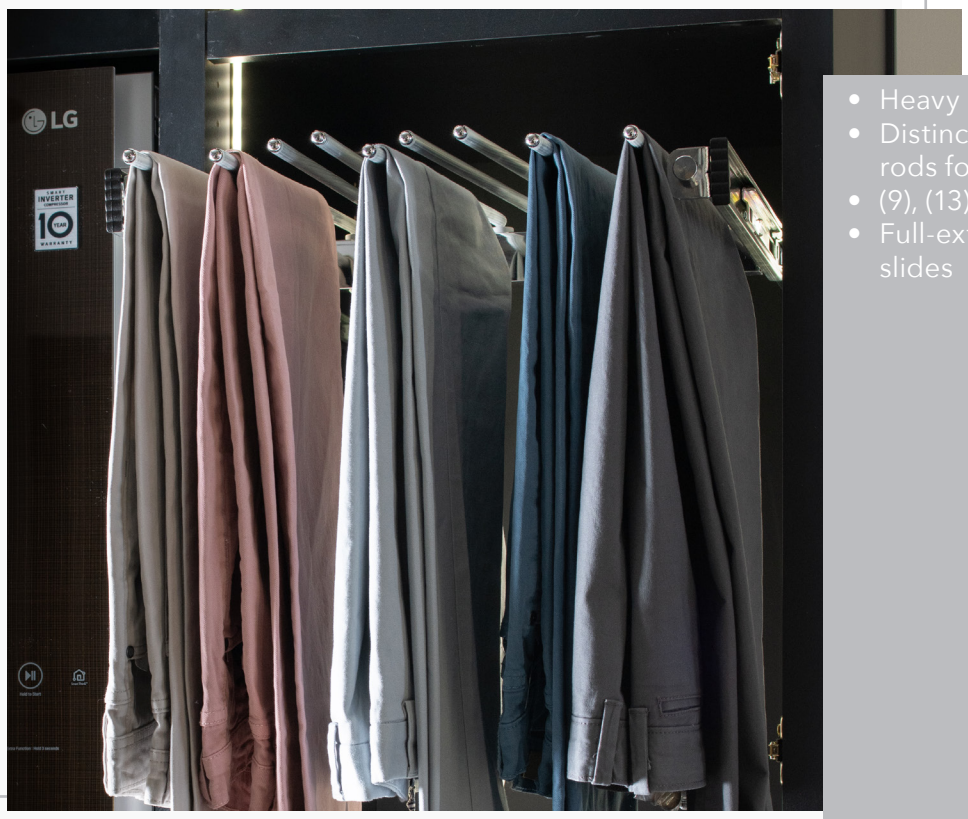

PSC-1814CR

- Heavy gauge chrome frame
- Distinctive movable rods for easy access
- (9), (13) or (16) chrome rods
- Full-extension, ball-bearing slides

Non-slip Covering

PSC-1814CR
9-Capacity

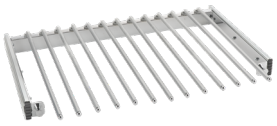

PSC-2414CR
13-Capacity

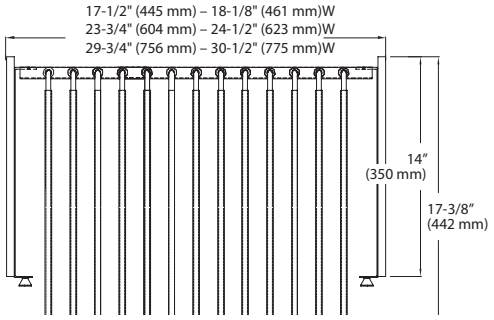

Wire Pants Rack Pullouts

PRODUCT	DESCRIPTION	DIMS	FINISH	SLP
PSC-1814CR	Pants Rack–9 capacity	17-1/2 - 18-1/8" (444 - 460 mm) W x 14" (356 mm) D x 3" (76 mm) H	Chrome	$211.70
PSC-2414CR	Pants Rack–13 capacity	23-3/4 - 24-1/2" (603 - 622 mm) W x 14" (356 mm) D x 3" (76 mm) H	Chrome	$217.50
PSC-3014CR	Pants Rack–16 capacity	29-3/4 - 30-1/2" (756 - 775 mm) W x 14" (356 mm) D x 3" (76 mm) H	Chrome	$223.30

CSR Series

Wire Shoe Rail

- Available lengths: 17", 23", 29" and 35" x 2-1/4" height
- Available in chrome
- Installs easily in 32 mm applications
- Heavy gauge wire

NOTE: Designed to fit 5 mm mounting holes on 32 mm spacing

CSR-23CR-10

(10) Wire Shoe Rails

PRODUCT	DESCRIPTION	DIMS	FINISH	SLP
CSR-17CR-10	17" Wire Shoe Rail	17" (432 mm) W x 7/16" (432 mm) D x 2-1/4" (57 mm) H	Chrome	$8.70 ea.
CSR-23CR-10	23" Wire Shoe Rail	23" (584 mm) W x 7/16" (584 mm) D x 2-1/4" (57 mm) H	Chrome	$11.60 ea.
CSR-29CR-10	29" Wire Shoe Rail	29" (737 mm) W x 7/16" (737 mm) D x 2-1/4" (57 mm) H	Chrome	$14.50 ea.
CSR-35CR-10	35" Wire Shoe Rail	35" (889 mm) W x 7/16" (889 mm) D x 2-1/4" (57 mm) H	Chrome	$17.40 ea.

CSRSL Series

Shoe Rail

- Available lengths: 18", 24", 30", 36" x 2" height
- Configured for shelf slide application
- Available in matte black or satin nickel
- Installs easily in 32 mm applications

SIDELINES® by REV-A-SHELF

NEW FINISH!

CSRSL-24SN-10

Satin Nickel

Matte Black

(10) Shoe Rails

PRODUCT	DESCRIPTION	DIMS	FINISH	SLP (10)
CSRSL-18MB-10	18" Shoe Rail	17" (432 mm) W x 7/16" (12 mm) D x 2" (51 mm) H	Matte Black	$18.85 ea.
CSRSL-24MB-10	24" Shoe Rail	23" (584 mm) W x 7/16" (12 mm) D x 2" (51 mm) H	Matte Black	$21.00 ea.
CSRSL-30MB-10	30" Shoe Rail	29" (737 mm) W x 7/16" (12 mm) D x 2" (51 mm) H	Matte Black	$27.55 ea.
CSRSL-36MB-10	36" Shoe Rail	35" (889 mm) W x 7/16" (12 mm) D x 2" (51 mm) H	Matte Black	$32.65 ea.
CSRSL-18SN-10	18" Shoe Rail	17" (432 mm) W x 7/16" (12 mm) D x 2" (51 mm) H	Satin Nickel	$18.85 ea.
CSRSL-24SN-10	24" Shoe Rail	23" (584 mm) W x 7/16" (12 mm) D x 2" (51 mm) H	Satin Nickel	$21.00 ea.
CSRSL-30SN-10	30" Shoe Rail	29" (737 mm) W x 7/16" (12 mm) D x 2" (51 mm) H	Satin Nickel	$27.55 ea.
CSRSL-36SN-10	36" Shoe Rail	35" (889 mm) W x 7/16" (12 mm) D x 2" (51 mm) H	Satin Nickel	$32.65 ea.

Closet Mirrors

CMSL/CMTWSL Series

- (2) Design configurations
  - Premier
  - 3-Way Foldable
- Premier mirror is available in (2) heights, 24" and 48"
- 3-Way Foldable mirror has (3) panels that open up to 26" W and is 48" H
- Pulls out smoothly and swivels 90 degrees
- Allow 5-3/4" for swiveling clearance
- Soft-close retracting mechanism, requires only a gentle push
- Fits any partition at least 14" deep and 8" wide
- Can be installed behind cabinet doors
- Universal, non-handed

CMTWSL-1448-SM-1

CMSL-1424-SM-1
24" Closet Mirror
(Silver mist finish shown)

Swivels 90°

SIDELINES® by REV-A-SHELF

Scan for video

Soft-Close Closet Mirrors w/ Over-travel

PRODUCT	DESCRIPTION	DIMS	FINISH	SLP
CMSL-1448-SM-1	48" Closet Mirror	2" (51 mm) W x 13-3/4" (330 mm) D x 47-1/4" (1219 mm) H	Silver Mist	$398.75
CMSL-1424-SM-1	24" Closet Mirror	2" (51 mm) W x 13-3/4" (330 mm) D x 23-5/8" (610 mm) H	Silver Mist	$391.50
3-Way Soft-Close Closet Mirror w/ Over Travel				
CMTWSL-1448-SM-1	48" 3-Way Closet Mirror	3-3/16" (81 mm) W x 13-7/8" (343 mm) D x 47-1/4" (1200 mm) H	Silver Mist	$942.50

CPUIBSL Series

Premier Pop-Up Ironing Board

- Fits any partition at least 14" deep and 10" wide
- 6" wide when stored, including hardware
- Reversible mounting
- Over-travel slides
- Soft-open assist
- Metal legs lock for stability
- Adjustable feet
- Board is 43" long, 13" wide
- US Patent No. 7,310,889 B1
- Replacement cover (sold separately)

CPUIBSL-14-SM-1

Scan for video

SIDELINES® by REV-A-SHELF

rev-a-shelf.com | 800-626-1126 | info@rev-a-shelf.com

REV-A-SHELF

Pull out

Swivel

Pop-Up

CPUIBSL-14-SM-1
Premier Pop-Up Ironing Board

Premier (Pop-Up)

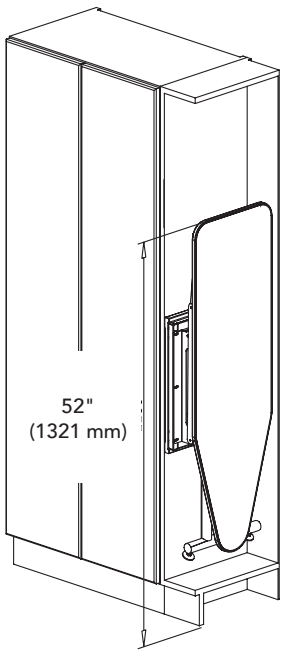

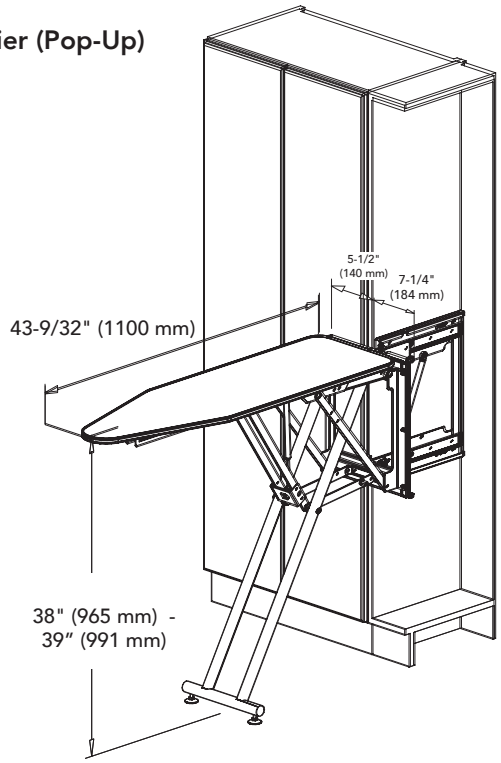

Soft-Close Premier Pop-Up Ironing Board w/ Over-Travel

PRODUCT	DESCRIPTION	DIMS	FINISH	SLP
CPUIBSL-14-SM-1	Premier Pop-Up Ironing Board	6-9/32" (160 mm) W x 13-7/16" (342 mm) D x 43-9/32" (1100 mm) H	Silver Mist	$868.55
Canvas Ironing Board Covers				
CPUIBSL-COVER-52	Cover for Premier Pop-Up Ironing Board	13-3/8" (340 mm) W x 43-11/16" (1110 mm) D x 27/32" (22 mm) H	Tan	$63.05

CROIBSL Series

Elite Rotating Ironing Board

NEW FINISH!

- Board is 38" long, 13" wide
- Mounts on shelf
- Rotates 360-degrees when out of cabinet
- Locks into place
- Soft-close over-travel
- 18-1/2" wide when stored
- Fits any partition at least 14" deep
- Spacer kit for drawer mounting included
- Replacement cover (sold separately)

CROIBSL-14-SM-1

Scan for video

SIDELINES® by REV-A-SHELF

Pull out

Rotate

Open

Swivel 360°

CROIBSL-14-MB-1
Elite Rotating Ironing Board, Matte Black

Elite rotating ironing board can rotate 360° with built-in stops

Elite (Rotating)

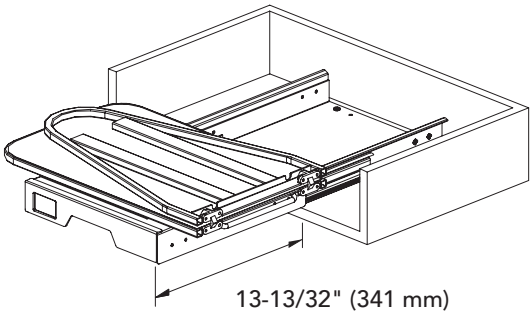

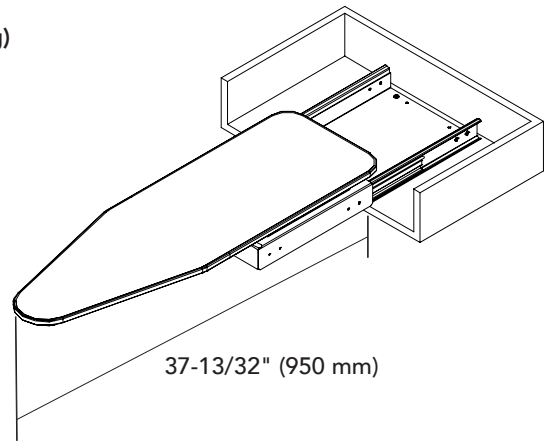

Perfect for installation behind a drawer front with ETH and now Cup hinges, using the included spacers

Soft-Close Elite Rotating Ironing Board w/ Over-Travel				
PRODUCT	DESCRIPTION	DIMS	FINISH	SLP
CROIBSL-14-SM-1	Elite Rotating Ironing Board	18-11/16" (475 mm) W x 14" (356 mm) D x 4-17/32" (114 mm) H	Silver Mist	$565.80
CROIBSL-14-MB-1	Elite Rotating Ironing Board	18-11/16" (475 mm) W x 14" (356 mm) D x 4-17/32" (114 mm) H	Matte Black	$565.50
Canvas Ironing Board Covers				
CROIBSL-COVER-52	Cover for Elite Rotating Ironing Board	12-3/16" (310 mm) W x 37-13/16" (960 mm) D x 7/8" (22 mm) H	Tan	$50.75

CSWIBSL Series

Deluxe Swivel Ironing Board

CSWIBSL-14-SM-1

- Board: 38" long, 13" wide
- 5" wide when stored, including hardware
- Fits any partition at least 14" deep and 10" wide
- Overall height when stored: 72"
- Adjustable feet for stability
- Replacement cover (sold separately)

Scan for video

SIDELINES® by REV-A-SHELF

Pull out

Swivel

Pull down

CSWIBSL-14-SM-1
Deluxe Swivel Ironing Board

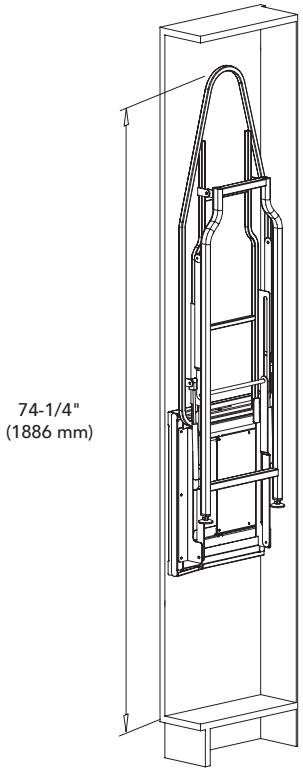

Deluxe (Swivel)

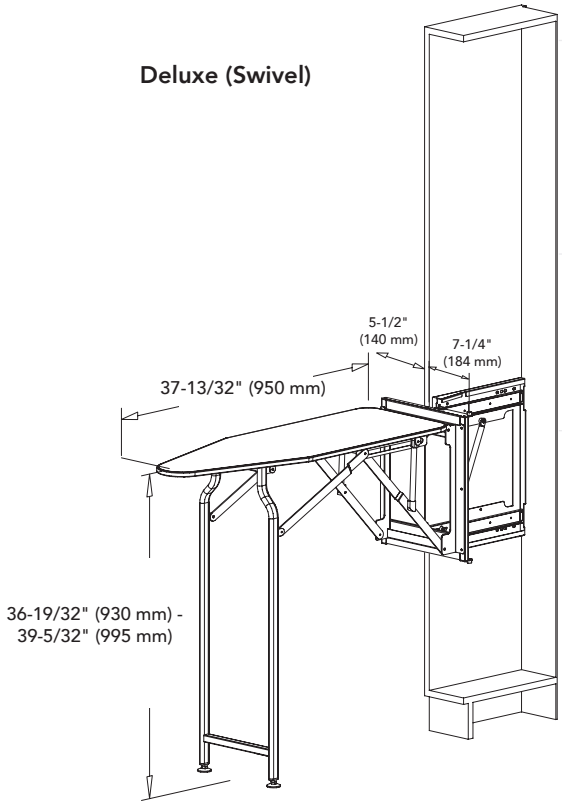

Soft-Close Deluxe Swivel Ironing Board w/ Over-Travel

PRODUCT	DESCRIPTION	DIMS	FINISH	SLP
CSWIBSL-14-SM-1	Deluxe Swivel Ironing Board	5-1/4" (133 mm) W x 13" (330 mm) D x 53-1/8" (1350 mm) H	Silver Mist	$609.00
Canvas Ironing Board Covers				
CSWIBSL-COVER-52	Cover for Deluxe Swivel Ironing Board	13-3/8" (340 mm) W x 37-3/8" (950 mm) D x 27/32" (22 mm) H	Tan	$53.65

CIB Series

Pullout Ironing Board

CIB-16CR

- Designed for 14-1/2" to 21" vanity cabinet drawer openings
- Complete drawer system, just add your drawer front
- Chrome-plated metal frame
- Over-extension, ball-bearing slides
- Mounts to cabinet front, side and rear wall
- Built-in ironing board

SURFACE AREA

VIB-20CR (Vanity Cabinet)		CIB-16CR (Closet Model)	
WIDTH	LENGTH	WIDTH	LENGTH
11.8" 300 mm	37.7" 957 mm	11.8" 300 mm	29.2" 742 mm

See page 221 for Vanity version

rev-a-shelf.com | 800-626-1126 | info@rev-a-shelf.com

REV-A-SHELF

Perfect application to do quick touch-up ironing before work or a night on the town

Solid surface counter overlays
CANNOT exceed 1-1/4"

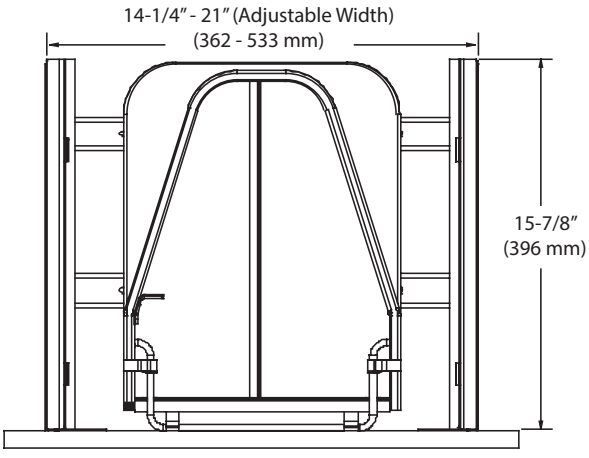

Height = 4" (102 mm)
MIN OPENING: Height = 3-21/32" (93 mm)

Closet Model (CIB-16CR)

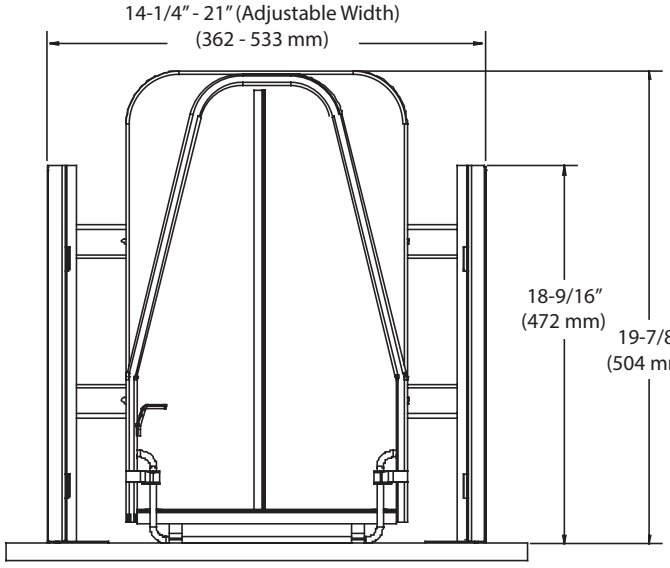

Height = 4" (102 mm)
MIN OPENING: Height = 3-21/32" (93 mm)

Bathroom/Laundry Model (VIB-20CR)

CIB-16CR
Closet Pullout Ironing Board

RAS-CIB-COVER-R-52
Replacement Cover (Closet)

VIB-20CR
Vanity Pullout Ironing Board

RAS-VIB-COVER-52
Replacement Cover (Vanity)

NOTE: Not compatible with inset cabinetry

Pullout Ironing Board

PRODUCT	DESCRIPTION	DIMS	FINISH	SLP
CIB-16CR	Closet Pullout Ironing Board	See drawings for detailed specifications.	Chrome	$282.75
RAS-CIB-COVER-R-52	Replacement Cover (Closet)		Silver	$27.55
VIB-20CR	Vanity Pullout Ironing Board	See drawings for detailed specifications.	Chrome	$348.00
RAS-VIB-COVER-52	Replacement Cover (Vanity)		Silver	$26.10

4WH Series

Bottom Mount Wood Hamper

- Cast aluminum rack housing
- Two sizes, 12" or 14"
- Fits panel depths of 12" or greater
- 10 mm diameter rod extends 9.5"
- Available in matte black, chrome or satin nickel
- Single 1.5 BU polymer hamper, white
- Maple frame with semi-gloss finish
- Full-extension concealed slides w/ BLUM soft-close
- Mounts to cabinet door and floor
- Pre-assembled door-mount brackets
- Rear storage
- (1) matching lid
- TSCA Title VI compliant

Scan for video

*Replacement lid Part No: SP-HPB-LID

1.5 BU Bottom Mount Hamper Pullout w/ BLUM Soft-Close

PRODUCT	DESCRIPTION	DIMS	MCO	CAB	FINISH	SLP
4WH-VCSC-21DM-1	Hamper Pullout	20-5/16" (516 mm) W x 18-11/16" (475 mm) D x 21-1/4" (540 mm) H	21" (533 mm)	VB24	Maple	$462.55
Accessories						
HPB-03323-52	Replacement Hamper	14" (356 mm) W x 18-5/8" (473 mm) D x 18-1/4" (464 mm) H			Polymer	$49.30

HPRV Series

Wire Bottom Mount Polymer Hamper

- Features a shallow 14" depth for closet applications
- Full-extension, ball-bearing slides
- 1.7 BU capacity
- Installs with just (4) screws
- Includes removable lid
- Available with or without door-mount bracket kit

*Replacement lid Part No: SP-HPB-LID

Wire Bottom Mount Polymer Hamper Pullout

PRODUCT	DESCRIPTION	DIMS	FINISH	SLP
HPRV-1925 S	1.7 BU Hamper	19-7/8" (505 mm) W x 14" (356 mm) D x 24" (610 mm) H	Polymer	$188.50
HPRV-1925DM S	Door Mount 1.7 BU Hamper	19-7/8" (505 mm) W x 14" (356 mm) D x 24" (610 mm) H	Polymer	$200.10

Undersink Waste Containers

8-010 Series

8-010314-15

- Designed for 33" and 36" sink base cabinets or 24" single door sink base cabinets
- Single black polymer container with built-in handle, 14 or 15 L
- Stainless steel or white lacquer finish
- Lid rises as container pivots out
- Mounts to cabinet door, floor and side walls

Undersink Waste Container Pivot Outs

PRODUCT	DESCRIPTION	DIMS	MCO	CAB	FINISH	SLP
8-010212-14	Single 14 L	11" (280 mm) W x 10-1/2" (267 mm) D x 17-1/8 - 11" (435 - 280 mm) H	13-3/4" (350 mm)	SB33	White Lacquered	$117.45
8-010412-15	Single 15 L	11-3/4" (299 mm) W x 10-1/2" (267 mm) D x 15-3/16" (386 mm) H	14-3/4" (375 mm) - FF 14-3/4" (375 mm) - FL	SB36	White Lacquered	$129.05
8-010314-15	Single 15 L	11-3/4" (299 mm) W x 10-1/2" (267 mm) D x 15-3/16" (386 mm) H	14-3/4" (375 mm) - FF 14-3/4" (375 mm) - FL	SB36	Stainless Steel	$158.05

CH Series

Aluminum Bottom Mount Wire Hamper

REV-A-MOTION SOFT OPEN SOFT CLOSE
US PATENT NO: 8,091,971

- Designed for 24" base height vanity cabinets
- Double 1.2 BU wire hampers, with (2) canvas liners, machine washable
- Anodized aluminum frame, metallic silver
- Full-extension with 1-1/2" over-travel, ball-bearing slides w/ Rev-A-Motion® soft-open/soft-close (US Patent No. 8,091,971)
- Mounts to cabinet door and floor
- Patented door-mount brackets with 5" of adjustability (US Patent No. 8,939,526)
- US Patent No. 9,049,930

CH-241419-RM-217

Scan for video

Soft-Close Piston

CH-241419-RM-217
Double 1.2 BU Hampers w/ (2) Liners and Silver Base

Aluminum Bottom Mount Wire Hamper w/ Rev-A-Motion®						
PRODUCT	DESCRIPTION	DIMS	MCO	CAB	FINISH	SLP
CH-241419-RM-217	Double 1.2 BU Hampers w/ Silver Base	24" (610 mm) W x 13-15/16" (355 mm) D x 18-7/8" (480 mm) H	24" (610 mm)	VB27	Silver/Tan	$710.50
Accessories						
5CHB-Liner	(1) Replacement Canvas Liner				Tan	$29.00

Acrylic Shelf Dividers

CSPD Series

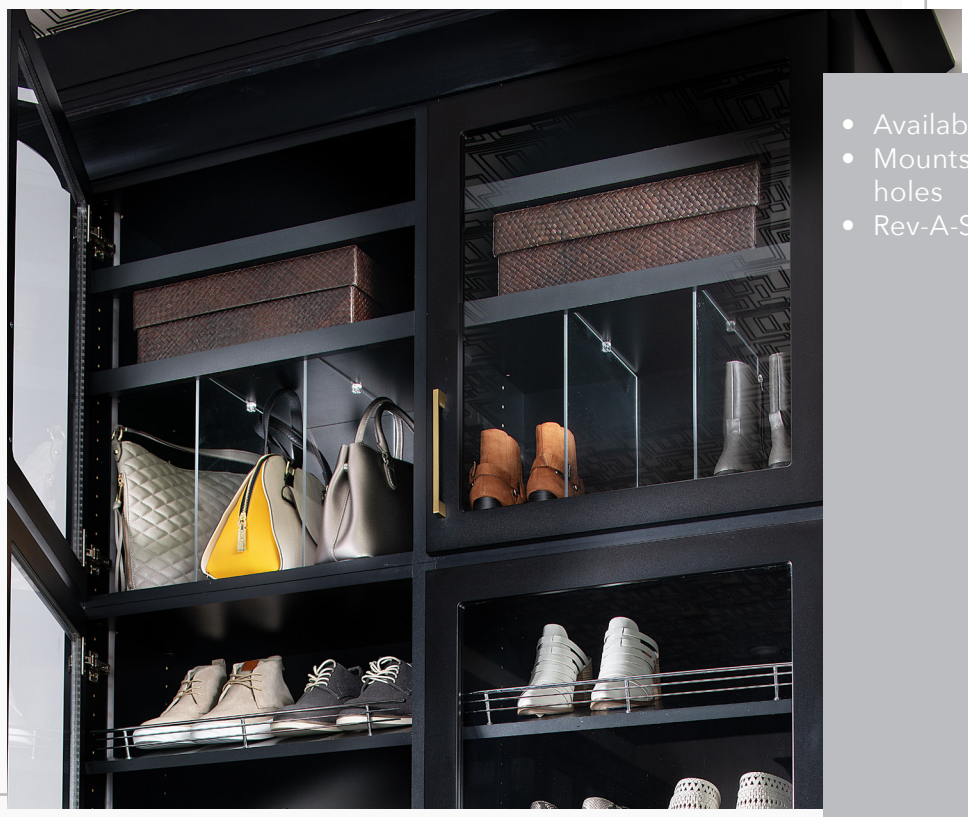

- Available in (2) sizes
- Mounts utilizing 32 mm system holes
- Rev-A-Shelf® exclusive design

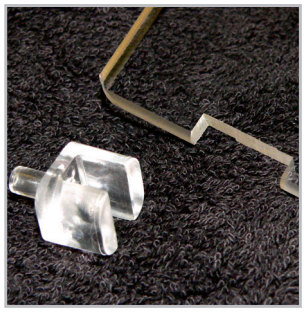

Clips are inserted into notches cut into the acrylic to hold dividers secure

Acrylic dividers can be used in many different ways

(10) Acrylic Dividers w/ (40) Clips

PRODUCT	DESCRIPTION	DIMS	FINISH	SLP
CSPD-6	6" Clear Shoe/Purse Organizer	13-1/2" (342 mm) D x 6-9/16" (167 mm) H x 1/4" (6.4 mm) Thick	Acrylic	$14.50 ea.
CSPD-14	14" Clear Shoe/Purse Organizer	13-1/2" (342 mm) D x 14-1/8" (359 mm) H x 1/4" (6.4 mm) Thick	Acrylic	$31.90 ea.

CPDR Series

Pulldown Closet Rod

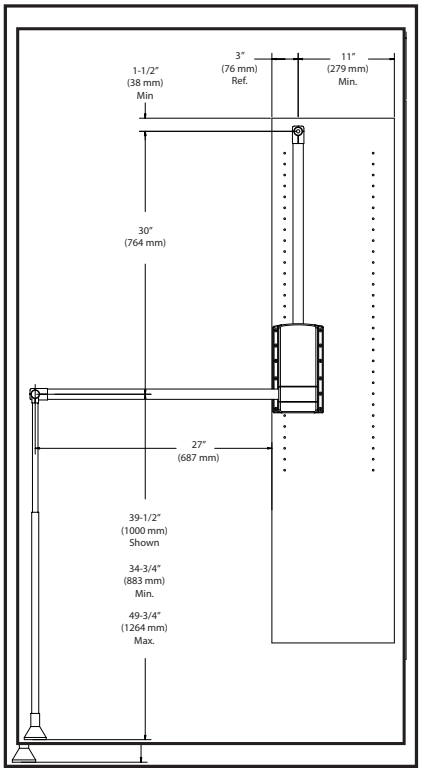

CPDR-2635ORB

- Available in (3) sizes
- Telescoping pull-rod, adjustable from 34" (864 mm) to 50" (1270 mm)
- Mounts to cabinet side
- Rev-A-Shelf® exclusive design
- 25 lb. weight capacity

Reinforce your CPDR with our included heavy-duty bumper

REV-A-SHELF® EXCLUSIVE! Push button mechanism for adjusting handle length

CPDR-1826
21-1/2"- 26" Closet Rod

CPDR-3548
35"- 48" Closet Rod

Pulldown Closet Rod

PRODUCT	DESCRIPTION	DIMS	FINISH	SLP
CPDR-1826	Closet Rod	21-1/2" - 26" (547 - 661 mm) W x 4" (102 mm) D x 34-3/4 - 49-3/4" (883 mm - 1264 mm) H	Chrome/ Black	$221.85
CPDR-2635	Closet Rod	26" - 35" (661 - 889 mm) W x 4" (102 mm) D x 34-3/4 - 49-3/4" (883 mm - 1264 mm) H	Chrome/ Black	$224.75
CPDR-3548	Closet Rod	35" - 48" (889 - 1220 mm) W x 4" (102 mm) D x 34-3/4 - 49-3/4" (883 mm - 1264 mm) H	Chrome/ Black	$230.55

Premier Satin Chrome Pulldown Closet Rod

CPDRSL Series

NEW FINISH!

Soft Close

CPDRSL-48SC

- Cut-to-size fits cabinet openings from 18" (457 mm) to 48" (1219 mm)
- Hanging area of 16.9" (429 mm) to 46.9" (1192 mm)
- Available in matte black and satin chrome
- Swivel handle
- Soft-open/soft-close assist
- 33 lb. capacity
- Mounts to cabinet sides
- Sidelines by Rev-A-Shelf® exclusive design

Can be cut-to-size to fit various cabinet openings

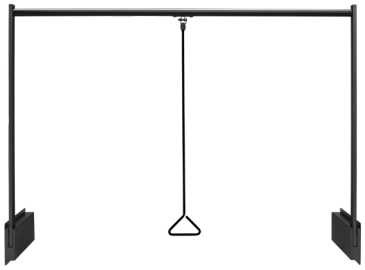

CPDRSL-48MB
18"- 48" Closet Rod, matte black

Scan for video

	CLOSET ROD CUT LENGTH
LB-18	16-29/32" (429 mm)
LB-24	22-29/32" (582 mm)
LB-30	28-29/32" (735 mm)
LB-36	34-29/32" (888 mm)
LB-42	40-29/32" (1040 mm)
LB-48	46-29/32" (1192 mm)

Durable mechanism housing constructed of steel

SIDELINES® by REV-A-SHELF

Premier Satin Chrome Pulldown Closet Rod

PRODUCT	DESCRIPTION	DIMS	MCO	FINISH	SLP
CPDRSL-48SC	Premier Closet Pulldown	18 - 48" (458 - 1220 mm) W x 12-13/32" (315 mm) D x 35-7/16" (900 mm) H	37-1/2" (953 mm)	Satin Chrome	$623.50
CPDRSL-48MB	Premier Closet Pulldown	18 - 48" (458 - 1220 mm) W x 12-13/32" (315 mm) D x 35-7/16" (900 mm) H	37-1/2" (953 mm)	Matte Black	$623.50

CJD Series

Pullout Jewelry Drawer

CJD-2414 Jewelry Drawer dimensions.

Inside Height = 1-13/32" (36 mm)
Overall Height = 1-13/16" (46 mm)

- Installs easily in 32 mm applications
- Full-extension, ball-bearing slides
- Drawer-front mounting capability
- Constructed with a solid wood box
- Used in coordination with the CJD-24IS (Jewelry) and CJD-24IN (Necklace) inserts
- CJD-IS and CJD-IN feature easy "drop-in" installation and a soft, velvet-flocked covering
- Rev-A-Shelf® exclusive design
- TSCA Title VI compliant

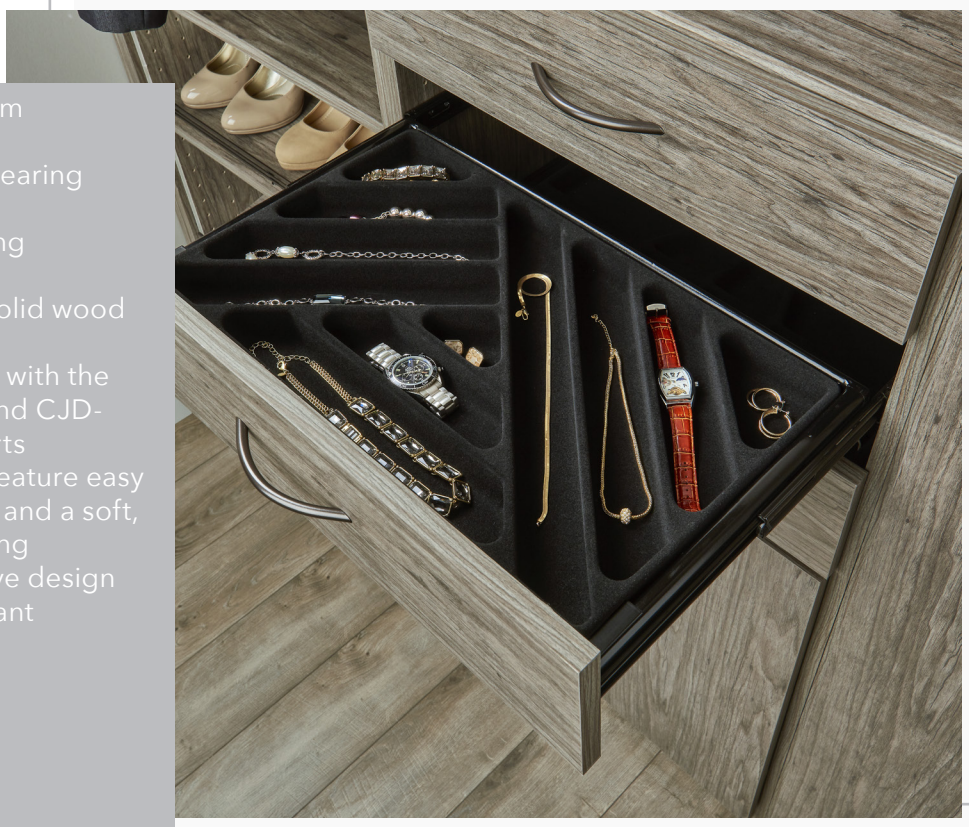

Shown drawer front mounted with a single drawer and necklace insert

CJD-2414

CJD-24IN
Necklace Insert

CJD-24IS
Jewelry Insert

CJD-2414
Jewelry Drawer w/ Slides

Jewelry Pullout Drawer

PRODUCT	DESCRIPTION	DIMS	FINISH	SLP
Pullout Jewelry Drawer w/ Inserts (Individual Pack)				
CJD-2414	Jewelry Drawer w/ Slides	24" (610 mm) W x 14" (356 mm) D x 1-7/8" (48 mm) H	Black	$105.85
(2) Jewelry Drawer Inserts (NOTE: will not fit in CVJD Series Jewelry Drawer) (Bulk Pack)				
CJD-24IS	Jewelry Insert	22" (559 mm) W x 13" (331 mm) D x 1-1/2" (39 mm) H	Velvet	$75.40 ea.
CJD-24IN	Necklace Insert	22" (559 mm) W x 13" (331 mm) D x 1-1/2" (39 mm) H	Velvet	$75.40 ea.
(5) Drawer Front Mounting Bracket Pairs (Bulk Pack)				
CJD-DMB-KIT	Drawer Front Mount Bracket		Black	$6.50 ea.

NOTE: The CJD Jewelry Drawer utilizes 14" black ball-bearing slides

Undermount Jewelry Drawer

CVJD Series

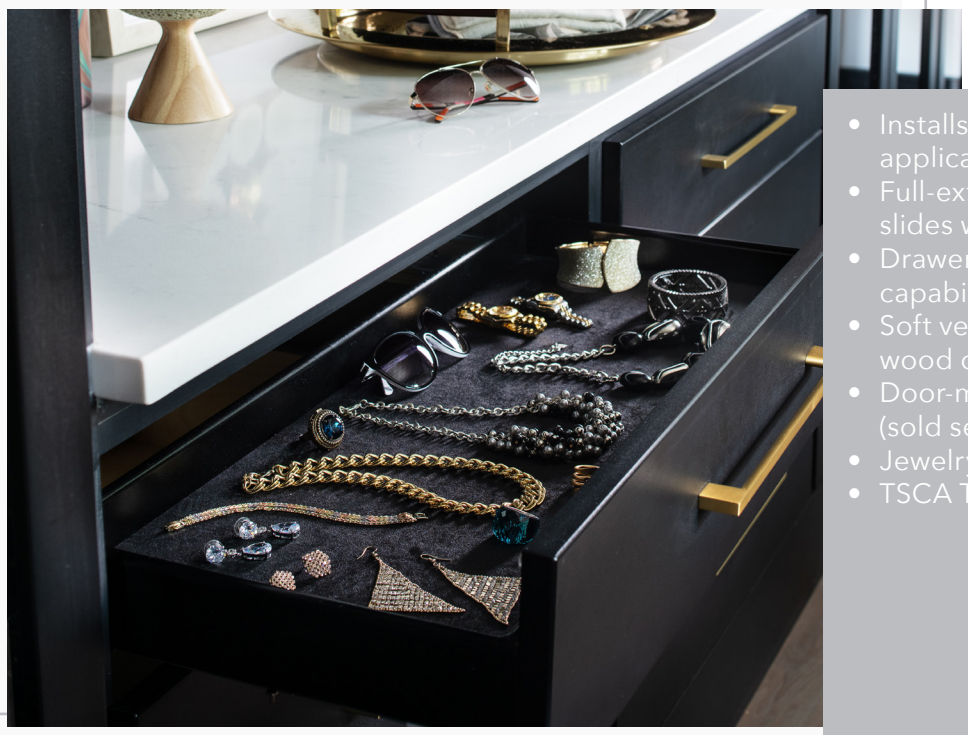

CVJD-3014UM-1

- Installs easily in 32 mm applications
- Full-extension, ball-bearing slides w/ soft-close
- Drawer-front mounting capability
- Soft velvet covering and sturdy wood construction
- Door-mount brackets (sold separately)
- Jewelry inserts (sold separately)
- TSCA Title VI compliant

Jewelry inserts (sold separately) for rings, bracelets and necklaces

CVJD-3014UM-1
30" Undermount Jewelry Drawer

Undermount Jewelry Drawer				
PRODUCT	DESCRIPTION	DIMS	FINISH	SLP
Under Mount Jewelry Drawer (Individual Pack)				
CVJD-1814UM-1	Undermount Jewelry Drawer	18" (458 mm) W x 14" (356 mm) D x 3-1/8" (80 mm) H	Black	$203.00
CVJD-2414UM-1	Undermount Jewelry Drawer	24" (610 mm) W x 14" (356 mm) D x 3-1/8" (80 mm) H	Black	$239.25
CVJD-3014UM-1	Undermount Jewelry Drawer	30" (762 mm) W x 14" (356 mm) D x 3-1/8" (80 mm) H	Black	$250.85
Jewelry Drawer Inserts (Individual Pack)				
CV-RING-1	Velvet Ring Organizer	11-5/8" (296 mm) W x 4-1/4" (108 mm) D x 1-1/4" (32 mm) H	Black	$43.50
CA-SMORG-1	Watch/Bracelet Organizer	11-5/8" (296 mm) W x 4-1/4" (108 mm) D x 1-1/4" (32 mm) H	Clear	$87.00
CA-LGORG-1	Earring Organizer	11-5/8" (296 mm) W x 6" (153 mm) D x 1-1/4" (32 mm) H	Clear	$92.80
CA-NECKLACE-1	Necklace Organizer	11-5/8" (296 mm) W x 6" (153 mm) D x 1-1/4" (32 mm) H	Clear	$92.80
Drawer Front Mounting Brackets (Bulk Pack)				
CJD-DMB-KIT	Drawer Front Mount Bracket		Black	$6.50 ea.

Note: Minimum Height Opening: 3-1/4" (82 mm)

PROP 65 WARNING FOR CALIFORNIA RESIDENTS

WARNING: These products can expose you to chemicals such as formaldehyde, lead or styrene, which are known to the State of California to cause cancer and birth defects or other reproductive harm. For more information go to www.P65Warnings.ca.gov

REV-A-SHELF

LAZY SUSAN

Standing the test of time, our Lazy Susan line is revered as the best in the industry with exceptional quality, unfaltering durability and premium selection! Our extensive collection of Lazy Susans includes Full-Circle, Kidney-Shaped, D-Shaped, Pie-Cut and Half-Moon designs to accommodate any cabinet shape. With sizes ranging from 10" to 32" and your choice of polymer, wood or wire, you are sure to find the perfect Susan for any cabinet size or style. The bottom line - we know Lazy Susans! Next time you are specifying a Lazy Susan, call on the brand you can trust for superior quality and the brand that started it all: Rev-A-Shelf®!

Innovation through ***Organization***™

Lazy Susan

Polymer Lazy Daisy

- Unique patented snap pin design
- Ribbed tray surface
- Molded polymer hubs
- Independently rotating
  (Not applicable on pie cut)
- Almond and white
- Polypropylene material
- US Patent No.'s 7,922,016 and 8,528,873

Our Polymer Lazy Daisy Lazy Susans are tested to exceed BHMA Class II Specs: 15 lbs per square foot at 50k cycles

All of our Lazy Susans are manufactured using high quality materials and are backed by a limited Lifetime Warranty. We have developed a tiered category system (Good, Better, Best) that will allow you to quickly identify which configuration will give you the features you want, with the value you require.

MADE IN THE USA

Good

Tray Configurations

Call for Bulk Pricing 800-626-1126

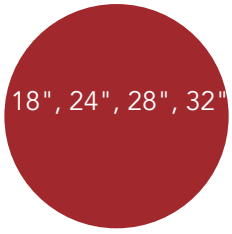

Full-Circle

D-Shaped

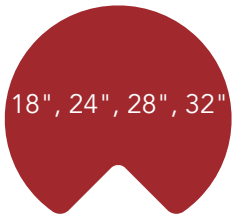

Kidney-Shaped

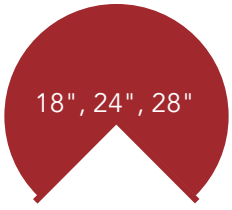

Pie-Cut

See Page 323 for Hardware

** Insert "11" for White or "15" for Almond finish

FULL-CIRCLE SHELF

Bottom Mount Polymer Lazy Daisy w/ Hardware

PRODUCT	DESCRIPTION	DIMS	FINISH	SLP
LD-2061-18BM-**-1	Single Shelf	18" Diameter (457 mm)	Polymer	$47.85
LD-2061-24BM-**-1	Single Shelf	24" Diameter (610 mm)	Polymer	$53.65
LD-2061-28BM-**-1	Single Shelf	28" Diameter (711 mm)	Polymer	$59.45
LD-2061-32BM-**-1	Single Shelf	32" Diameter (813 mm)	Polymer	$79.75
(2) Shelf Bottom Mount Polymer Lazy Daisy w/ Hardware				
LD-2062-18BM-**-1	(2) Shelf Set	18" Diameter (457 mm)	Polymer	$73.95
LD-2062-24BM-**-1	(2) Shelf Set	24" Diameter (610 mm)	Polymer	$91.35
LD-2062-28BM-**-1	(2) Shelf Set	28" Diameter (711 mm)	Polymer	$94.25
LD-2062-32BM-**-1	(2) Shelf Set	32" Diameter (813 mm)	Polymer	$124.40
(2) Shelf Polymer Lazy Daisy w/ 26"-31" Telescoping Post				
LD-2062-18-**-1	(2) Shelf Set	18" Diameter (457 mm)	Polymer	$76.85
LD-2062-24-**-1	(2) Shelf Set	24" Diameter (610 mm)	Polymer	$94.25
LD-2062-28-**-1	(2) Shelf Set	28" Diameter (711 mm)	Polymer	$97.15
LD-2062-32-**-1	(2) Shelf Set	32" Diameter (813 mm)	Polymer	$131.95
(3) Shelf Polymer Lazy Daisy w/ 34"-41" Telescoping Post				
LD-2063-1836-**-1	(3) Shelf Set	18" Diameter (457 mm)	Polymer	$105.85

(Attaches to the cabinet door)

PIE-CUT SHELF

(2) Shelf Polymer Lazy Daisy w/ 26"-31" Telescoping Post

PRODUCT	DESCRIPTION	DIMS	FINISH	SLP
LD-2942-18-**-1	(2) Shelf Set	18" Diameter (457 mm)	Polymer	$102.95
LD-2942-24-**-1	(2) Shelf Set	24" Diameter (610 mm)	Polymer	$119.65
LD-2942-28-**-1	(2) Shelf Set	28" Diameter (711 mm)	Polymer	$131.95

(Hinged door; not attached)

KIDNEY SHELF

(2) Shelf Polymer Lazy Daisy w/ 26"-31" Telescoping Post

PRODUCT	DESCRIPTION	DIMS	FINISH	SLP
LD-2472-18-**-1	(2) Shelf Set	18" Diameter (457 mm)	Polymer	$72.50
LD-2472-24-**-1	(2) Shelf Set	24" Diameter (610 mm)	Polymer	$87.00
LD-2472-28-**-1	(2) Shelf Set	28" Diameter (711 mm)	Polymer	$102.95
LD-2472-32-**-1	(2) Shelf Set	32" Diameter (813 mm)	Polymer	$123.25
(2) Shelf Bottom Mount Polymer Lazy Daisy w/ Hardware				
LD-2472-18BM-**-1	(2) Shelf Set	18" Diameter (457 mm)	Polymer	$68.15
LD-2472-24BM-**-1	(2) Shelf Set	24" Diameter (610 mm)	Polymer	$94.95
LD-2472-28BM-**-1	(2) Shelf Set	28" Diameter (711 mm)	Polymer	$94.95
LD-2472-32BM-**-1	(2) Shelf Set	32" Diameter (813 mm)	Polymer	$123.25
(3) Shelf Bottom Mount Polymer Lazy Daisy w/ 34"-41" Telescoping Post				
LD-2473-1836-**-1	(3) Shelf Set	18" Diameter (457 mm)	Polymer	$107.30

D-SHAPED SHELF

Bottom Mount Polymer Lazy Daisy w/ Hardware

PRODUCT	DESCRIPTION	DIMS	FINISH	SLP
LD-2261-32BM-**-1	Single Shelf	32" Diameter (813 mm)	Polymer	$82.65
(2) Shelf Polymer Lazy Daisy w/ Hardware				
LD-2262-32-**-1	(2) Shelf Set	32" Diameter (813 mm)	Polymer	$143.55
(2) Shelf Bottom Mount Polymer Lazy Daisy w/ Hardware				
LD-2262-32BM-**-1	(2) Shelf Set	32" Diameter (813 mm)	Polymer	$136.30

SPECIFICATIONS LAZY DAISY POLYMER SHELVES

Shelf	Material	Series	A	B	C	D	Post System
18" Kidney	Polymer	LD	1-1/8"	2"	11"	18"	25 mm IND./DEP.
24" Kidney	Polymer	LD	1-3/4"	2-3/4"	14-3/4"	24"	25 mm IND./DEP.
28" Kidney	Polymer	LD	3"	4-3/8"	18-3/8"	27-5/8"	25 mm IND./DEP.
32" Kidney	Polymer	LD	4"	6"	21-7/8"	31-3/4"	25 mm IND./DEP.

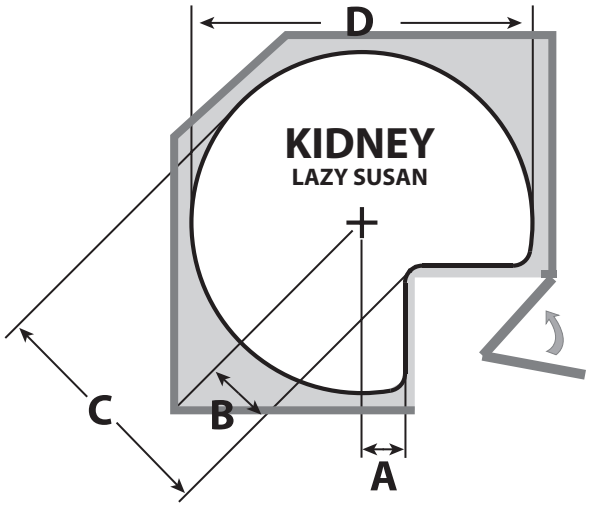

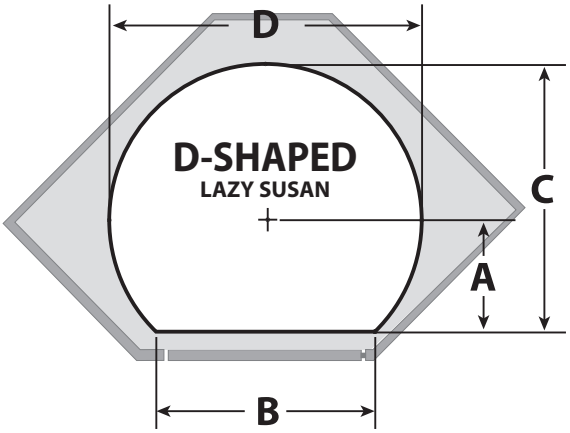

Shelf	Material	Series	A	B	C	D	Post System
32" D-Shaped	Polymer	LD	14"	14-3/4"	29-7/8"	31-3/4"	25 mm IND./DEP.

(Attaches to the cabinet door)

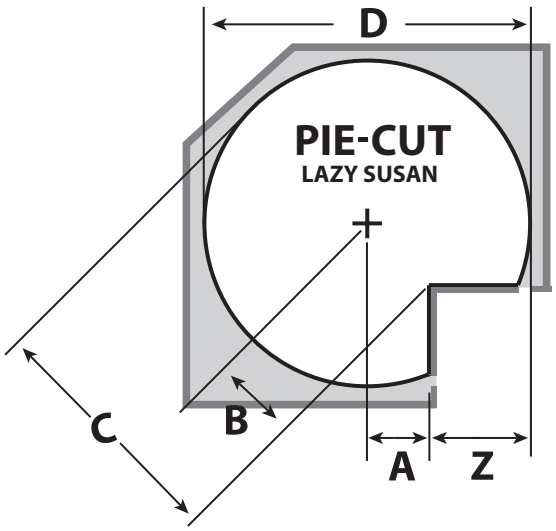

Shelf	Material	Series	A	B	C	D	Z
18" Pie-Cut	Polymer	LD	1-1/8"	1-5/8"	10-5/8"	18"	8" + 1/8" GAP
24" Pie-Cut	Polymer	LD	1-5/8"	2-3/8"	14-3/8"	24"	10-3/8" + 1/8" GAP
28" Pie-Cut	Polymer	LD	3"	4-1/4"	18"	27-5/8"	10-7/8" + 1/8" GAP

For custom applications, a trial installation is recommended.
Door edge profile, thickness and gaps all factor in installation.

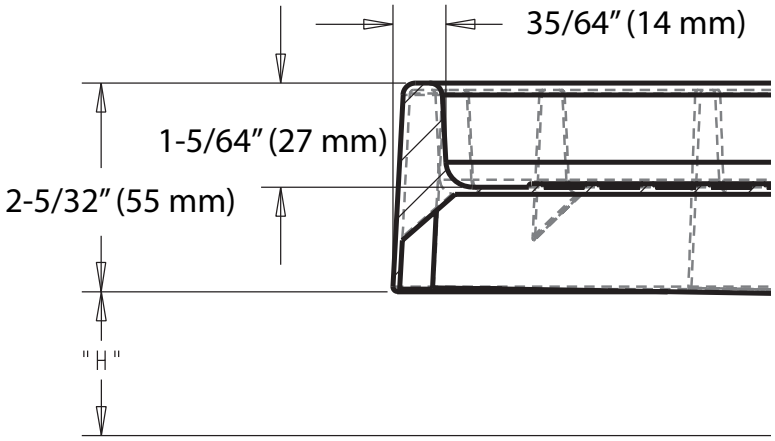

Tray Shape	"H"
Full-Circle	1-19/32" (41 mm)
Kidney & D-Shaped	1-7/16" (37 mm)

WE HAVE EVEN MORE OPTIONS!

LAZY SUSANS

Call your salesperson or 800-626-1126 if you would like more information on

Custom Tray/Hardware Configurations

Pallet Program/Enviro Packaging:

Many of our Lazy Susans are available in pallet quantities:

- Volume pricing
- Reduced transportation cost
- Minimal storage space
- Environmentally conscious packaging

Lazy Susan

Polymer Value Line

- Twist-n-Lock telescoping post
- Molded polymer hubs
- Independently rotating
- Almond and white
- Polystyrene material

Our Lazy Susans are tested to exceed BHMA Class 1 Specs: 20 lbs. per square foot at 75K cycles.

All of our Lazy Susans are manufactured using high quality materials and are backed by a limited Lifetime Warranty. We have developed a tiered category system (Good, Better, Best) that will allow you to quickly identify which configuration will give you the features you want, with the value you require.

MADE IN THE USA

Better

Shelf	Material	Series	A	B	C	D	Post System
24" Kidney	Polymer	3400	1-1/2"	2-5/16"	14-5/16"	24"	1" Ind.
28" Kidney	Polymer	3400	3"	4-11/16"	18-5/8"	28"	1" Ind.
32" Kidney	Polymer	3400	4-1/4"	6-7/16"	22-7/16"	32"	1" Ind.

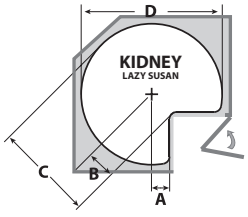

OPTIONAL: Ring cap included on 18" and 20" unit eliminates detent

DEP.=DEPENDENTLY ROTATING SYSTEM

IND.=INDEPENDENTLY ROTATING SYSTEM

Tray Configurations

Call for Bulk Pricing 800-626-1126

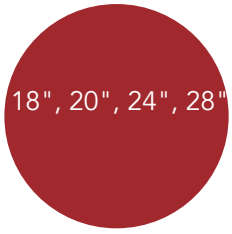

Full-Circle

Kidney-Shaped

Twist-n-Lock Telescoping Post

See Page 323 for Hardware

FULL-CIRCLE SHELF

NOTE: ** Insert "11" for White or "15" for Almond finish

Value Line Lazy Susan w/ Hub - *Must purchase bottom mount hardware to attach to cabinet*

PRODUCT	DESCRIPTION	DIMS	FINISH	SLP
3071-18-**-52	Single Shelf	18" (457 mm) Diameter	Polymer	$34.80
3071-20-**-52	Single Shelf	20" (508 mm) Diameter	Polymer	$39.15
3071-24-**-52	Single Shelf	24" (610 mm) Diameter	Polymer	$43.50
3071-28-**-52	Single Shelf	28" (711 mm) Diameter	Polymer	$53.65
Bottom Mount Hardware				
BM1-VL-04-52	Hardware	4-1/4" (108 mm) H	Zinc	$26.95
(2) Shelf Value Line Lazy Susan w/ 26"-31" (660–788 mm) Telescoping Post				
3072-18-**-52	(2) Shelf Set	18" (457 mm) Diameter	Polymer	$76.85
3072-20-**-52	(2) Shelf Set	20" (508 mm) Diameter	Polymer	$85.55
3072-24-**-52	(2) Shelf Set	24" (610 mm) Diameter	Polymer	$97.15
3072-28-**-52	(2) Shelf Set	28" (711 mm) Diameter	Polymer	$111.65
(3) Shelf Value Line Lazy Susan w/ 31"-38" (788–965 mm) Telescoping Post				
3073-18-**-531	(3) Shelf Set	18" (457 mm) Diameter	Polymer	$119.65
3073-20-**-531	(3) Shelf Set	20" (508 mm) Diameter	Polymer	$126.15
(3) Shelf Value Line Lazy Susan w/ 38"-46" (965–1169 mm) Telescoping Post				
3073-18-**-536	(3) Shelf Set	18" (457 mm) Diameter	Polymer	$122.50
3073-20-**-536	(3) Shelf Set	20" (508 mm) Diameter	Polymer	$128.30

KIDNEY-SHAPED SHELF

(Hinged door; not attached)

Value Line Lazy Susan w/ Hub - *Must purchase bottom mount hardware to attach to cabinet*

PRODUCT	DESCRIPTION	DIMS	FINISH	SLP
3471-24-**-52	Single Shelf	24" (610 mm) Diameter	Polymer	$40.60
3471-28-**-52	Single Shelf	28" (711 mm) Diameter	Polymer	$50.75
3471-32-**-52	Single Shelf	32" (813 mm) Diameter	Polymer	$59.45
Bottom Mount Hardware				
BM1-VL-04-52	Hardware	4-1/4" (108 mm) H	Zinc	$26.95
(2) Shelf Value Line Lazy Susan w/ 26"-31" (660–788 mm) Telescoping Post				
3472-24-**-52	(2) Shelf Set	24" (610 mm) Diameter	Polymer	$98.60
3472-28-**-52	(2) Shelf Set	28" (711 mm) Diameter	Polymer	$114.55
3472-32-**-52	(2) Shelf Set	32" (813 mm) Diameter	Polymer	$129.05

LIP SPECIFICATIONS

WALL SHELVES

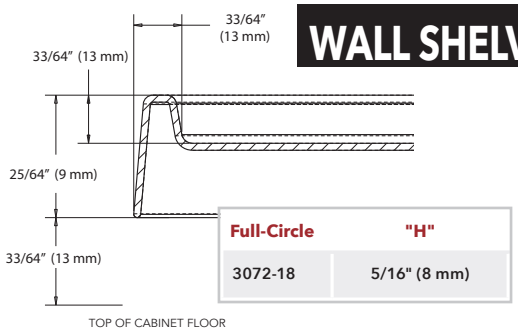

Full-Circle	"H"
3072-18	5/16" (8 mm)

BASE SHELVES

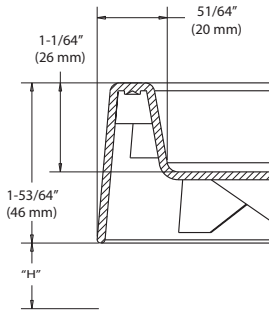

Full-Circle	"H"
3072-24 & 28	1-3/64" (27 mm)

Kidney	"H"
3472-24, 28 & 32	1-3/64" (27 mm)

VALUE LINE POLYMER SHELVES

Lazy Susan

RAS Polymer

- Chrome post and hubs
- Independently and dependently rotating
- Almond and white
- Polystyrene material
- Tested to exceed BHMA Grade 1 standards

Our Lazy Susans are tested to exceed BHMA Class 1 Specs: 20 lbs. per square foot at 75K cycles.

All of our lazy susans are manufactured using high quality materials and are backed by a limited Lifetime Warranty. We have developed a tiered category system (Good, Better, Best) that will allow you to quickly identify which configuration will give you the features you want, with the value you require.

MADE IN THE USA

Best

Tray Configurations

Call for Bulk Pricing 800-626-1126

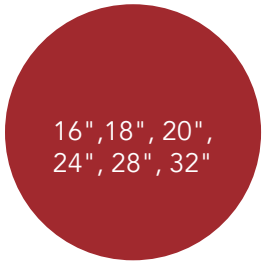

Full-Circle

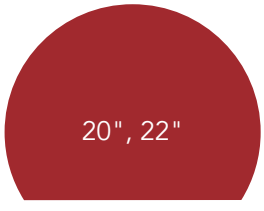

D-Shaped

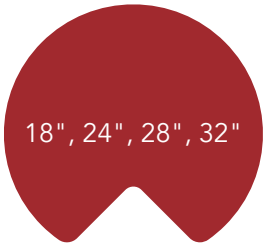

Kidney-Shaped

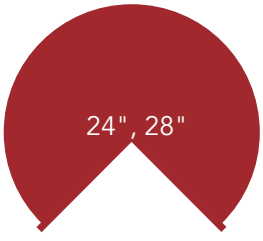

Pie-Cut

Half-Moon

See Page 323 for Hardware

D-SHAPED SHELF

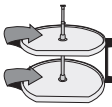

DEPENDENTLY ROTATING

PRODUCT	DESCRIPTION	DIMS	FINISH	SLP
(2) Shelf RAS Polymer Lazy Susan w/ 24"–31" (610–788 mm) Telescoping Post				
7012-20-**-52	(2) Shelf Set	20" (508 mm) Diameter	Polymer	$97.15
(3) Shelf RAS Polymer Lazy Susan w/ 38"–46" (965–1169 mm) Telescoping Post				
7013-20-**-526	(3) Shelf Set	20" (508 mm) Diameter	Polymer	$152.25

NOTES: 3/4" (19 mm) diameter post system. **7012 -** Telescoping post dimensions 12" (305 mm) upper & 21" (534 mm) lower post. **7013 -** Telescoping post dimensions 12" (305 mm) upper & 36" (915 mm) lower post. ** **Available colors: 11 White, 15 Almond** Tested to exceed BHMA Class 1 Specifications.

D-SHAPED SHELF

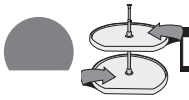

INDEPENDENTLY ROTATING

PRODUCT	DESCRIPTION	DIMS	FINISH	SLP
RAS Polymer Lazy Susan w/ Hub - *Must purchase bottom mount hardware to attach to cabinet*				
6271-20-**-52	Single Shelf	20" (508 mm) Diameter	Polymer	$49.30
6271-22-**-52	Single Shelf	22" (559 mm) Diameter	Polymer	$59.45
Bottom Mount Hardware				
BM1-04-52	Hardware	4-11/16" (119 mm) H	Zinc	$33.35
BM1-18-52	Hardware for (2) Shelf Set	17-7/8" (454 mm) H	Zinc	$52.05
Bottom Mount RAS Polymer Lazy Susan w/ Hardware				
6221-20-**-52	Single Shelf	20" (508 mm) Diameter	Polymer	$71.05
6221-22-**-52	Single Shelf	22" (559 mm) Diameter	Polymer	$75.40
(2) Shelf RAS Polymer Lazy Susan w/ 26"–32" (660-813 mm) Telescoping Post				
6272-20-**-52	(2) Shelf Set	20" (508 mm) Diameter	Polymer	$168.20
6272-22-**-52	(2) Shelf Set	22" (559 mm) Diameter	Polymer	$171.10
(3) Shelf RAS Polymer Lazy Susan w/ 38"–46" (965–1169 mm) Telescoping Post				
6273-20-**-536	(3) Shelf Set	20" (508 mm) Diameter	Polymer	$245.05
6273-22-**-536	(3) Shelf Set	22" (559 mm) Diameter	Polymer	$250.85

KIDNEY-SHAPED SHELF

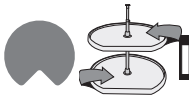

INDEPENDENTLY ROTATING

PRODUCT	DESCRIPTION	DIMS	FINISH	SLP
RAS Polymer Lazy Susan w/ Hub - *Must purchase bottom mount hardware to attach to cabinet*				
6471-18-**-52	Single Shelf	18" (457 mm) Diameter	Polymer	$53.20
6471-24-**-52	Single Shelf	24" (610 mm) Diameter	Polymer	$65.25
6471-28-**-52	Single Shelf	28" (711 mm) Diameter	Polymer	$76.85
6471-32-**-52	Single Shelf	32" (813 mm) Diameter	Polymer	$82.65
Bottom Mount Hardware				
BM1-04-52	Hardware	4-11/16" (119 mm) H	Zinc	$39.15
BM1-18-52	Hardware for (2) Shelf Set	17-7/8" (454 mm) H	Zinc	$52.05
Bottom Mount RAS Polymer Lazy Susan w/ Hardware				
6421-18-**-52	Single Shelf	18" (457 mm) Diameter	Polymer	$71.05
6421-24-**-52	Single Shelf	24" (610 mm) Diameter	Polymer	$75.40
6421-28-**-52	Single Shelf	28" (711 mm) Diameter	Polymer	$87.00
6421-32-**-52	Single Shelf	32" (813 mm) Diameter	Polymer	$97.15
(2) Shelf RAS Polymer Lazy Susan w/ 26"–32" (660-813 mm) Telescoping Post				
6472-18-**-52	(2) Shelf Set	18" (457 mm) Diameter	Polymer	$110.20
6472-24-**-52	(2) Shelf Set	24" (610 mm) Diameter	Polymer	$141.40
6472-28-**-52	(2) Shelf Set	28" (711 mm) Diameter	Polymer	$166.75
6472-32-**-52	(2) Shelf Set	32" (813 mm) Diameter	Polymer	$184.15

FULL-CIRCLE SHELF

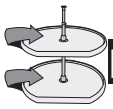

DEPENDENTLY ROTATING

(2) Shelf RAS Polymer Lazy Susan w/ 24"–31" (610–788 mm) Telescoping Post

PRODUCT	DESCRIPTION	DIMS	FINISH	SLP
6012-18-**-52	(2) Shelf Set	18" (457 mm) Diameter	Polymer	$83.40
6012-20-**-52	(2) Shelf Set	20" (508 mm) Diameter	Polymer	$90.65
6012-24-**-52	(2) Shelf Set	24" (610 mm) Diameter	Polymer	$102.95
6012-28-**-52	(2) Shelf Set	28" (711 mm) Diameter	Polymer	$123.95

(3) Shelf RAS Polymer Lazy Susan w/ 38"–46" (965–1169 mm) Telescoping Post

6013-18-**-526	(3) Shelf Set	18" (457 mm) Diameter	Polymer	$126.15
6013-20-**-526	(3) Shelf Set	20" (508 mm) Diameter	Polymer	$137.75

NOTES: 3/4" (19 mm) diameter post system. **6012 -** Telescoping post dimensions 12" (305 mm) upper & 21" (534 mm) lower post.
6013 - Telescoping post dimensions 12" (305 mm) upper & 36" (915 mm) lower post. Post length can be cut to accommodate inner cabinet heights of less than 38" (965 mm).

FULL-CIRCLE SHELF

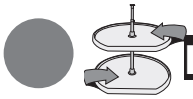

INDEPENDENTLY ROTATING

RAS Polymer Lazy Susan w/ Hub - *Must purchase bottom mount hardware to attach to cabinet*

PRODUCT	DESCRIPTION	DIMS	FINISH	SLP
6071-16-**-52	Single Shelf	16" (406 mm) Diameter	Polymer	$50.75
6071-18-**-52	Single Shelf	18" (457 mm) Diameter	Polymer	$52.20
6071-20-**-52	Single Shelf	20" (508 mm) Diameter	Polymer	$54.40
6071-24-**-52	Single Shelf	24" (610 mm) Diameter	Polymer	$60.90
6071-28-**-52	Single Shelf	28" (711 mm) Diameter	Polymer	$71.05
6071-32-**-52	Single Shelf	32" (813 mm) Diameter	Polymer	$82.65

Bottom Mount Hardware

BM1-04-52	Hardware	4-1/4" (108 mm) H	Zinc	$33.35

Bottom Mount RAS Polymer Lazy Susan w/ Hardware

PRODUCT	DESCRIPTION	DIMS	FINISH	SLP
6621-16-**-52	Single Shelf	16" (406 mm) Diameter	Polymer	$68.90
6621-18-**-52	Single Shelf	18" (457 mm) Diameter	Polymer	$70.35
6621-20-**-52	Single Shelf	20" (508 mm) Diameter	Polymer	$71.75
6621-24-**-52	Single Shelf	24" (610 mm) Diameter	Polymer	$80.45
6621-28-**-52	Single Shelf	28" (711 mm) Diameter	Polymer	$97.15
6621-32-**-52	Single Shelf	32" (813 mm) Diameter	Polymer	$111.65

(2) Shelf RAS Polymer Lazy Susan w/ 26"–32" (660-813 mm) Telescoping Post

6072-16-**-52	(2) Shelf Set	16" (406 mm) Diameter	Polymer	$151.55
6072-18-**-52	(2) Shelf Set	18" (457 mm) Diameter	Polymer	$153.70
6072-20-**-52	(2) Shelf Set	20" (508 mm) Diameter	Polymer	$169.65
6072-24-**-52	(2) Shelf Set	24" (610 mm) Diameter	Polymer	$204.45
6072-28-**-52	(2) Shelf Set	28" (711 mm) Diameter	Polymer	$218.95
6072-32-**-52	(2) Shelf Set	32" (813 mm) Diameter	Polymer	$230.55

(3) Shelf RAS Polymer Lazy Susan w/ 38"–46" (965–1169 mm) Telescoping Post

6073-18-**-536	(3) Shelf Set	18" (457 mm) Diameter	Polymer	$230.55
6073-20-**-536	(3) Shelf Set	20" (508 mm) Diameter	Polymer	$236.35

NOTES: 1" (26 mm) diameter post system. **6072 -** Telescoping post dimensions 9-1/4" (235 mm) upper & 21" (534 mm) lower post **6073. -** Telescoping post dimensions 9-1/4" (235 mm) upper & 36" (915 mm) lower post. **Additional shelves and/or longer posts can be special ordered.** Positioning base without wheels 6260-77-2 mounts on base of cabinet.

PIE-CUT SHELF

(Attaches to the cabinet door)

(2) Shelf RAS Polymer Lazy Susan w/ 26"–32" (660-813 mm) Telescoping Post

PRODUCT	DESCRIPTION	DIMS	FINISH	SLP
6942-24-**-52	(2) Shelf Set	24" (610 mm) Diameter	Polymer	$136.00
6942-28-**-52	(2) Shelf Set	28" (711 mm) Diameter	Polymer	$156.60

HALF-MOON SHELF

PRODUCT	DESCRIPTION	DIMS	MCO	CAB	FINISH	SLP
(2) Shelf RAS Polymer Lazy Susan w/ Pivot						
6842-31-**-570	(2) Shelf Set	31" (787 mm) Diameter	13-1/4" (337 mm) - FF 15" (381 mm) - FL	BC42	Polymer	$227.65
6842-33-**-570	(2) Shelf Set	33" (838 mm) Diameter	16-1/8" (410 mm) - FF 17-7/16" (443 mm) - FL	BC45	Polymer	$233.45
6842-39-**-570	(2) Shelf Set	39" (991 mm) Diameter	19-1/4" (489 mm) - FF 20-3/4" (527 mm) - FL	BC48	Polymer	$271.15
RAS Polymer Lazy Susan w/ Pivot and Slide						
6881-31-**-52	Single Shelf	31" (787 mm) Diameter	13-1/4" (337 mm) - FF 15" (381 mm) - FL	BC42	Polymer	$187.05
6881-33-**-52	Single Shelf	33" (838 mm) Diameter	16-1/8" (410 mm) - FF 17-7/16" (443 mm) - FL	BC45	Polymer	$188.50
6881-39-**-52	Single Shelf	39" (991 mm) Diameter	19-1/4" (489 mm) - FF 20-3/4" (527 mm) - FL	BC48	Polymer	$207.35
(2) Shelf RAS Polymer Lazy Susan w/ Pivot and Slides						
6882-31-**-570	(2) Shelf Set	31" (787 mm) Diameter	13-1/4" (337 mm) - FF 15" (381 mm) - FL	BC42	Polymer	$319.00
6882-33-**-570	(2) Shelf Set	33" (838 mm) Diameter	16-1/8" (410 mm) - FF 17-7/16" (443 mm) - FL	BC45	Polymer	$324.80
6882-39-**-570	(2) Shelf Set	39" (991 mm) Diameter	19-1/4" (489 mm) - FF 20-3/4" (527 mm) - FL	BC48	Polymer	$366.85
Hardware						
6882-1008-04-52	Half-Moon Slide Kit (1 Pair)	10-1/2" (267 mm) Extension			Polymer	$66.25

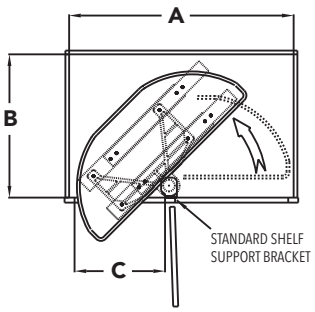

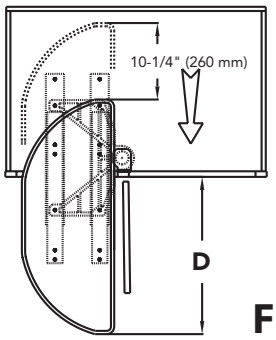

FRAMED CABINET

DIMENSIONS A, B, AND C ARE MINIMUMS. 31" TRAY SHOWN IN DIAGRAM.

NOM Tray size	A	B	C	D
31" (787 mm)	33-11/16" (856 mm)	21-1/2" (546 mm)	13-1/4" (344 mm)	21-1/16" (535 mm)
33" (838 mm)	34-5/16" (872 mm)	18-9/16" (471 mm)	16-1/8" (410 mm)	24-1/16" (611 mm)
39" (991 mm)	40-11/16" (1033 mm)	21-13/16" (554 mm)	19-1/4" (491 mm)	27-3/8" (695 mm)

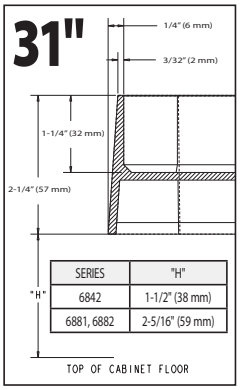

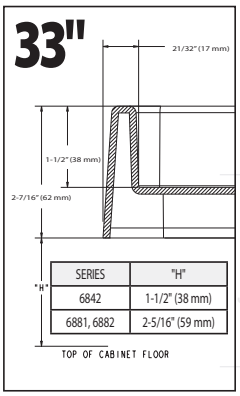

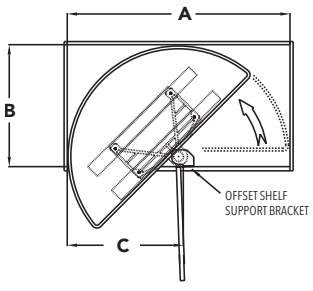

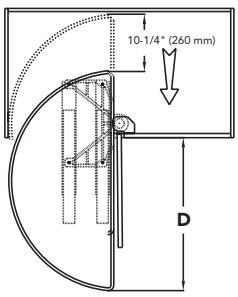

FRAMELESS CABINET

DIMENSIONS A, B, AND C ARE MINIMUMS. 39" TRAY SHOWN IN DIAGRAM.

NOM Tray size	A	B	C	D
31" (787 mm)	32-13/16" (833 mm)	21-1/2" (546 mm)	15" (381 mm)	21-1/16" (535 mm)
33" (838 mm)	33-3/16" (843 mm)	18-9/16" (471 mm)	17-7/16" (443 mm)	24-1/16" (611 mm)
39" (991 mm)	39-7/8" (1013 mm)	21-13/16" (554 mm)	20-3/4" (527 mm)	27-3/8" (695 mm)

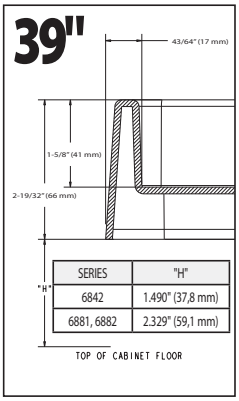

SPECIFICATIONS POLYMER SHELVES

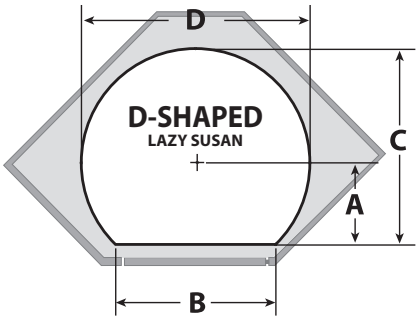

Shelf	Material	Series	A	B	C	D	Post System
20" D-Shaped	Polymer	6200	8-7/8"	9-1/4"	19"	20-1/8"	1" IND.
22" D-Shaped	Polymer	6200	7-3/16"	16-5/8"	18-3/16"	22"	1" IND.

Ind. = Independently Rotating System

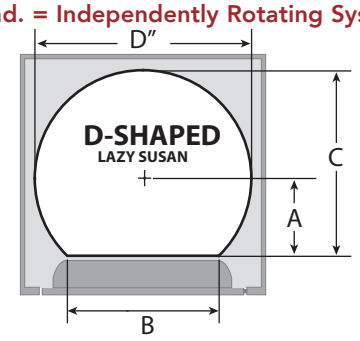

Shelf	Material	Series	A	B	C	D	Post System
20" D-Shaped	Polymer	7000	8-7/8"	9-1/4"	18-7/8"	20"	3/4" DEP.

DEP. = Dependently Rotating System

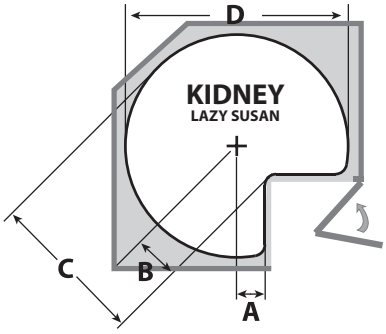

Shelf	Material	Series	A	B	C	D	Post System
18" Kidney	Polymer	6471	1-3/4"	2-13/16"	11-13/16"	18"	1" IND.
24" Kidney	Polymer	6471	1-1/2"	2-5/16"	14-5/16"	24"	1" IND.
28" Kidney	Polymer	6471	3"	4-11/16"	18-5/8"	28"	1" IND.
32" Kidney	Polymer	6471	4-1/4"	6-7/16"	22-7/16"	32"	1" IND.

IND. = Independently Rotating System

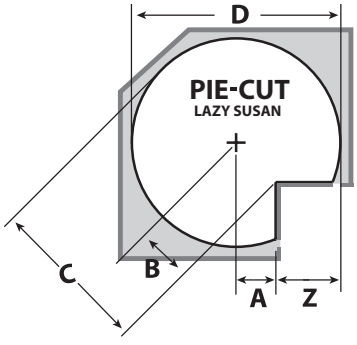

Shelf	Material	Series	A	B	C	D	Z	Post System
24" Pie-Cut	Polymer	6942	1-3/8"	1-15/16"	13-15/16"	24"	10-9/16" + 1/8" gap	1" DEP.
28" Pie-Cut	Polymer	6942	3"	4-1/4"	18-1/4"	28"	11" + 1/8" gap	1" DEP.

DEP. = Dependently Rotating System

For custom applications, a trial installation is recommended.
Door edge profile, thickness and gaps all factor in installation

LIP SPECIFICATIONS PIE-CUT POLYMER SHELVES

Dimensions are for reference only, and may change based on hardware used, etc.

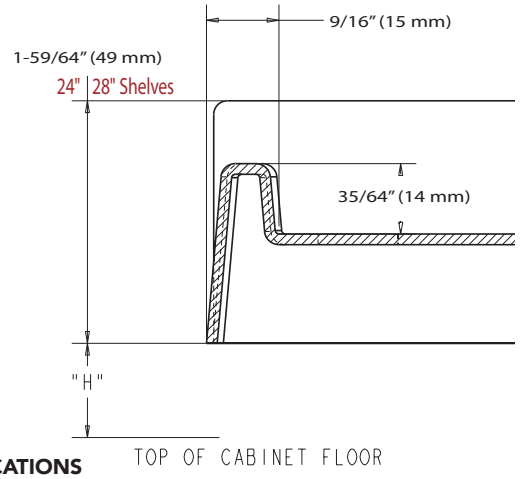

I" Shaft Pie-Cut	"H"
6942-24	1/4" (6 mm) *
6942-28	1/4" (6 mm) *

*6942-24 and 6942-28 can sit flush on top of the cabinet floor. 1/4" (6 mm) is recommended for clearance.

REV-A-SHELF® LAZY SUSANS ARE TESTED TO EXCEED BHMA CLASS 1 SPECIFICATIONS

Dimensions are for reference only, and may change based on hardware used, etc.

WALL SHELVES

Polymer Lazy Susan	
Full-Circle	**"H"**
3072-18	5/16" (8 mm)
6621-16, 18 & 20	1-19/64" (33 mm)
6072-16, 18 & 20	1-19/64" (33 mm)
6073-18 & 20	1-19/64" (33 mm)
6065-16 & 18	2-9/32" (58 mm)
6012-18 & 20	1/4" (6 mm)*
6013-18 & 20	1/4" (6 mm)*
Kidney	**"H"**
6421-18	1-19/64" (33 mm)
6472-18	1-19/64" (33 mm)

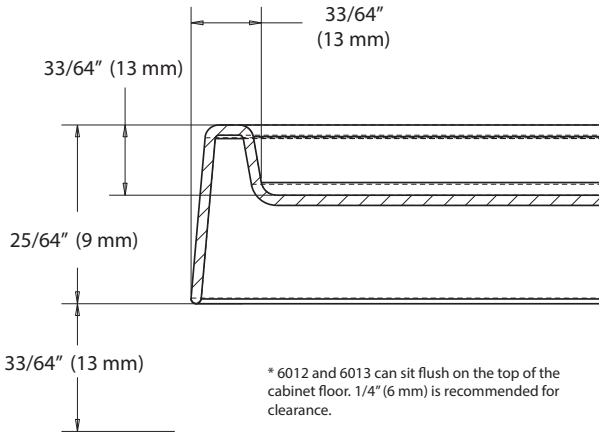

* 6012 and 6013 can sit flush on the top of the cabinet floor. 1/4" (6 mm) is recommended for clearance.

BASE SHELVES

Polymer Lazy Susan	
Full-Circle	**"H"**
3072-24 & 28	1-3/64" (27 mm)
6621-24, 28 & 32	1-15/64" (31 mm)
6072-24, 28 & 32	1-15/64" (31 mm)
Kidney	**"H"**
3472-24, 28 & 32	1-3/64" (27 mm)
6421-24, 28 & 32	1-15/64" (31 mm)
6472-24, 28 & 32	1-15/64" (31 mm)

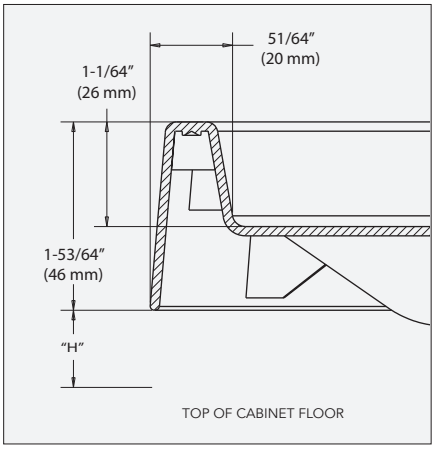

WALL SHELVES

Independently Rotation	
20" D-Shaped	**"H"**
6221-20	1-1/2" (38 mm)
6272-20	1-1/2" (38 mm)
6273-20	1-1/2" (38 mm)
Dependently Rotation	
20" D-Shaped	**"H"**
7012-20	1/4" (6 mm)
7013-20	1/4" (6 mm)

PANTRY SHELVES

Polymer Lazy Susan	
22" D-Shaped	**"H"**
6221-22	1-15/64" (31 mm)
6272-22	1-15/64" (31 mm)
6273-22	1-15/64" (31 mm)
6265-22	2-13/64" (56 mm)

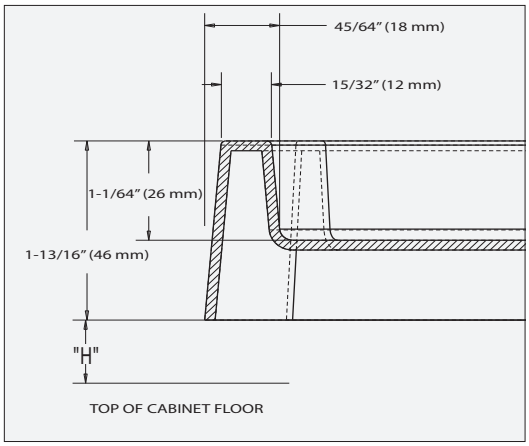

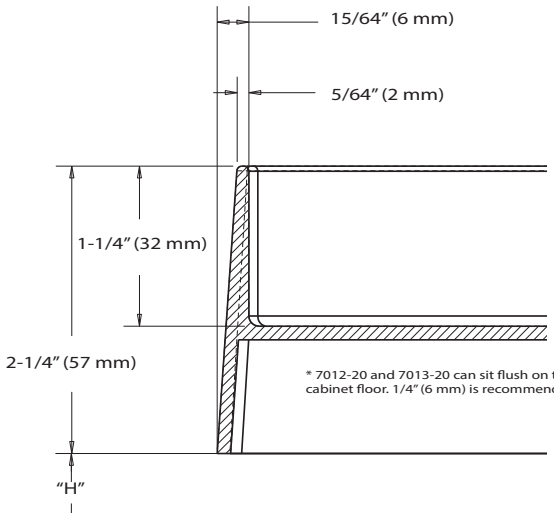

* 7012-20 and 7013-20 can sit flush on the top of the cabinet floor. 1/4" (6 mm) is recommended for clearance.

Lazy Susan

Banded Wood

- 2" banded wood rim
- Doweled (2) butt joint
- 5/8" thick maple shelf bottom
- Independently rotating
- Almond hardware
- Steel bearings

All wood products are TSCA Title VI compliant

Our Lazy Susans are tested to exceed BHMA Class 1 Specs: 20 lbs. per square foot at 75K cycles.

All of our lazy susans are manufactured using high quality materials and are backed by a limited Lifetime Warranty. We have developed a tiered category system (Good, Better, Best) that will allow you to quickly identify which configuration will give you the features you want, with the value you require.

MADE IN THE USA

Good

Tray Configurations

Call for Bulk Pricing 800-626-1126

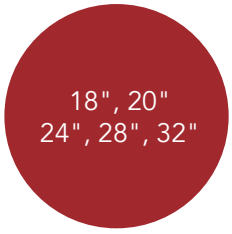

Full-Circle

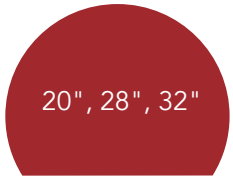

D-Shaped

Kidney-Shaped

Pie-Cut

See Page 323 for Hardware

FULL-CIRCLE SHELF

PRODUCT	DESCRIPTION	DIMS	FINISH	SLP
Banded Wood Lazy Daisy w/ Steel Bearing				
LD-4BW-001-18SB-1	Single Shelf w/ 7" Steel Bearing	18" (457 mm) Diameter	Maple	$120.35
LD-4BW-001-20SB-1	Single Shelf w/ 7" Steel Bearing	20" (508 mm) Diameter	Maple	$123.25
LD-4BW-001-24SB-1	Single Shelf w/ 10" Steel Bearing	24" (610 mm) Diameter	Maple	$155.15
LD-4BW-001-28SB-1	Single Shelf w/ 10" Steel Bearing	28" (711 mm) Diameter	Maple	$175.45
LD-4BW-001-32SB-1	Single Shelf w/ 10" Steel Bearing	32" (813 mm) Diameter	Maple	$210.25
(2) Shelf Banded Wood Lazy Daisy w/ 26"-31" (660–788 mm) Telescoping Post				
LD-4BW-062-18-1	(2) Shelf Set	18" (457 mm) Diameter	Maple	$230.55
LD-4BW-062-20-1	(2) Shelf Set	20" (508 mm) Diameter	Maple	$232.75
LD-4BW-062-24-1	(2) Shelf Set	24" (610 mm) Diameter	Maple	$276.20
LD-4BW-062-28-1	(2) Shelf Set	28" (711 mm) Diameter	Maple	$321.90
LD-4BW-062-32-1	(2) Shelf Set	32" (813 mm) Diameter	Maple	$382.80
(3) Shelf Banded Wood Lazy Daisy w/ 38"-46" (965–1169 mm) Telescoping Post				
LD-4BW-063-1836-1	(3) Shelf Set	18" (457 mm) Diameter	Maple	$350.90
LD-4BW-063-2036-1	(3) Shelf Set	20" (508 mm) Diameter	Maple	$355.25

*Note: Non-drilled trays without bearings are available, remove "SB" from product number.

PIE-CUT SHELF

(Attaches to the cabinet door)

PRODUCT	DESCRIPTION	DIMS	FINISH	SLP
(2) Shelf Banded Wood Lazy Daisy w/ Hardware				
LD-4BW-942-28-1	(2) Shelf Set	28" (711 mm) Diameter	Maple	$342.20

KIDNEY-SHAPED SHELF

(Hinged door; not attached)

PRODUCT	DESCRIPTION	DIMS	FINISH	SLP
Banded Wood Lazy Daisy w/ Steel Bearing and Stop				
LD-4BW-401-28SBS-1	Single Shelf w/ 7" Steel Bearing	28" (711 mm) Diameter	Maple	$155.15
LD-4BW-401-32SBS-1	Single Shelf w/ 10" Steel Bearing	32" (813 mm) Diameter	Maple	$194.30
(2) Shelf Banded Wood Lazy Daisy w/ 26"-31" (660–788 mm) Telescoping Post				
LD-4BW-472-24-1	(2) Shelf Set	24" (610 mm) Diameter	Maple	$266.05
LD-4BW-472-28-1	(2) Shelf Set	28" (711 mm) Diameter	Maple	$294.35
LD-4BW-472-32-1	(2) Shelf Set	32" (813 mm) Diameter	Maple	$344.40

*Note: Non-drilled trays without bearings are available, remove "SBS" from product number.

D-SHAPED SHELF

PRODUCT	DESCRIPTION	DIMS	FINISH	SLP
Banded Wood Lazy Daisy w/ Steel Bearing				
LD-4BW-201-20SBS-1	Single Shelf w/ 7" Steel Bearing	20" (508 mm) Diameter	Maple	$126.15
LD-4BW-201-28SBS-1	Single Shelf w/ 7" Steel Bearing	28" (711 mm) Diameter	Maple	$178.35
LD-4BW-201-32SBS-1	Single Shelf w/ 10" Steel Bearing	32" (813 mm) Diameter	Maple	$211.00
(2) Shelf Banded Wood Lazy Daisy w/ 26"-31" (660–788 mm) Telescoping Post				
LD-4BW-262-20-1	(2) Shelf Set	20" (508 mm) Diameter	Maple	$216.05
LD-4BW-262-28-1	(2) Shelf Set	28" (711 mm) Diameter	Maple	$303.05
LD-4BW-262-32-1	(2) Shelf Set	32" (813 mm) Diameter	Maple	$358.15
(3) Shelf Banded Wood Lazy Daisy w/ 38"-46" (965–1169 mm) Telescoping Post				
LD-4BW-263-2036-1	(3) Shelf Set	20" (508 mm) Diameter	Maple	$318.15

*Note: Non-drilled trays without bearings are available, remove "SBS" from product number.

SPECIFICATIONS BANDED WOOD SHELVES

Shelf	Material	Series	A	B	C	D	Post System
20" D-Shaped	Maple	LD-4BW	8-7/8"	6-7/8"	18-1/2"	19-1/2"	1" IND.
28" D-Shaped	Maple	LD-4BW	11-5/8"	13-1/4"	25-1/2"	27-3/4"	1" IND.
32" D-Shaped	Maple	LD-4BW	13-7/8"	13-7/8"	29-3/4"	31-3/4"	1" IND.

IND. = Independently Rotating System

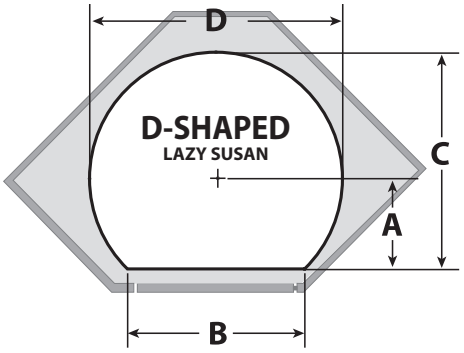

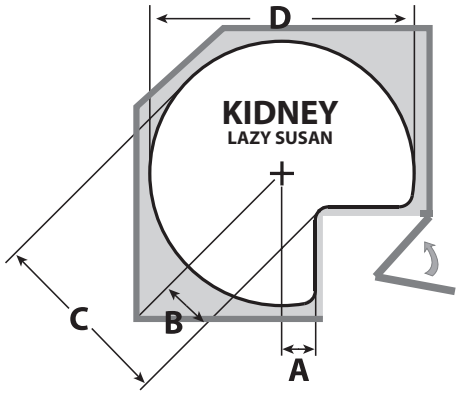

Shelf	Material	Series	A	B	C	D	Post System
24" Kidney	Maple	LD-4BW	1-1/2"	2-3/8"	14-3/8"	24"	1" IND.
28" Kidney	Maple	LD-4BW	2-7/8"	4-3/8"	18-1/4"	27-3/4"	1" IND.
32" Kidney	Maple	LD-4BW	4"	6"	21-7/8"	31-3/4"	1" IND.

IND. = Independently Rotating System

For custom applications a trial installation is recommended.
Door edge profile, thickness, and gaps all factor in installation.

Shelf	Material	Series	A	B	C	D	Z	Post System
28" Pie-Cut	Maple	LD-4BW	3"	4-1/4"	18-1/8"	27-3/4"	10-7/8" + 1/8" gap	1" DEP.

DEP. = Dependently Rotating System

(Attaches to the cabinet door)

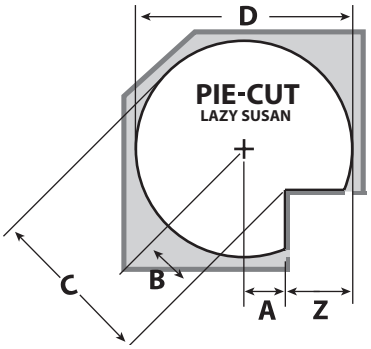

LIP SPECIFICATIONS BANDED WOOD SHELVES

Hardware	Tray Shape	"H"
Steel Bearing	FC, Kidney and D-Shaped	7/8" (23 mm)
Telescopic Post	Full Circle	1-13/32" (36 mm)
Telescopic Post	Kidney and D-Shaped	1-11/64" (30 mm)
Telescopic Post	Pie Cut	1-57/64" (48 mm)

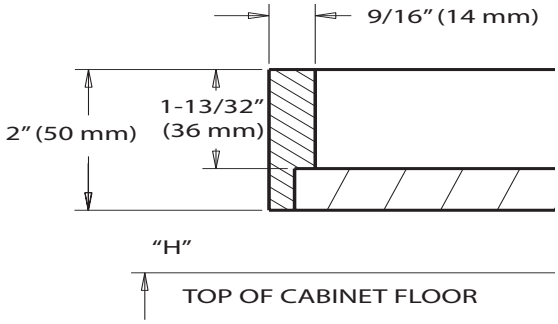

Lazy Susan

- 1-5/8" solid wood frame
- Finger joint
- 5/8" thick natural maple shelf bottom
- Chrome hardware
- Aluminum bearings

All wood products are TSCA Title VI compliant

Our Lazy Susans are tested to exceed BHMA Class 1 Specs: 20 lbs. per square foot at 75K cycles.

All of our lazy susans are manufactured using high quality materials and are backed by a limited Lifetime Warranty. We have developed a tiered category system (Good, Better, Best) that will allow you to quickly identify which configuration will give you the features you want, with the value you require.

MADE IN THE USA

Better

Tray Configurations

Call for Bulk Pricing 800-626-1126

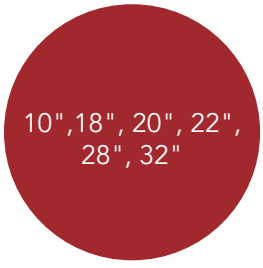

Full-Circle

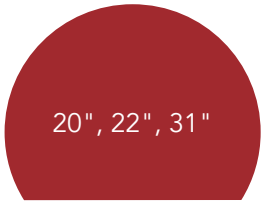

D-Shaped

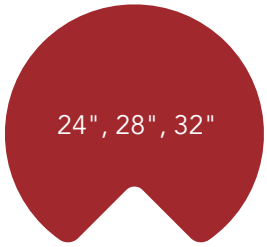

Kidney-Shaped

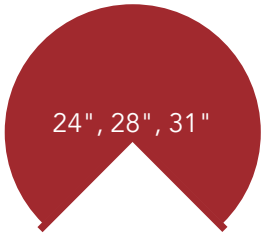

Pie-Cut

Half-Moon

See Page 323 for Hardware

FULL-CIRCLE SHELF

PRODUCT	DESCRIPTION	DIMS	FINISH	SLP
Wood Classic Lazy Susan - No Hardware				
4WLS001-18-52	Single Shelf	18" (457 mm) Diameter	Wood	$106.60
4WLS001-20-52	Single Shelf	20" (508 mm) Diameter	Wood	$121.80
4WLS001-28-52	Single Shelf	28" (711 mm) Diameter	Wood	$166.75
4WLS001-32-52	Single Shelf	32" (813 mm) Diameter	Wood	$195.75
Wood Classic Lazy Susan w/ Aluminum Bearing				
4WLS001-10-B52	Single Shelf w/ 7" Aluminum Bearing	10" (254 mm) Diameter	Wood	$129.05
4WLS001-18-B52	Single Shelf w/ 7" Aluminum Bearing	18" (457 mm) Diameter	Wood	$147.90
4WLS001-20-B52	Single Shelf w/ 7" Aluminum Bearing	20" (508 mm) Diameter	Wood	$164.55
4WLS001-28-B52	Single Shelf w/ 10" Aluminum Bearing	28" (711 mm) Diameter	Wood	$232.00
4WLS001-32-B52	Single Shelf w/ 10" Aluminum Bearing	32" (813 mm) Diameter	Wood	$245.05
(2) Shelf Wood Classic Lazy Susan w/ 26"–32" (660–813 mm) Telescoping Post				
4WLS072-18-52	(2) Shelf Set	18" (457 mm) Diameter	Wood	$271.15
4WLS072-20-52	(2) Shelf Set	20" (508 mm) Diameter	Wood	$285.65
4WLS072-22-52	(2) Shelf Set	22" (559 mm) Diameter	Wood	$332.05
4WLS072-28-52	(2) Shelf Set	28" (711 mm) Diameter	Wood	$420.50
4WLS072-32-52	(2) Shelf Set	32" (813 mm) Diameter	Wood	$442.25
(3) Shelf Wood Classic Lazy Susan w/ 38"-46" (965–1169 mm) Telescoping Post				
4WLS073-18-536	(3) Shelf Set	18" (457 mm) Diameter	Wood	$382.80
4WLS073-20-536	(3) Shelf Set	20" (508 mm) Diameter	Wood	$435.00

NOTE: 4WLS073-536 denotes telescoping post 9-1/4" (235 mm) upper & 36" (915 mm) lower assembly for 38"–46" (889-1092 mm) inner cabinet height wall cabinets, (3) shelves, top & bottom pivots & fasteners. Positioning base without wheels 6260-77-2 mounts on base of cabinet.

D-SHAPED SHELF

PRODUCT	DESCRIPTION	DIMS	FINISH	SLP
Wood Classic Lazy Susan - No Hardware				
4WLS201-20-52	Single Shelf	20" (508 mm) Diameter	Wood	$127.60
4WLS201-31-52	Single Shelf	31" (787 mm) Diameter	Wood	$189.95
Wood Classic Lazy Susan w/ Aluminum Bearing				
4WLS201-20-BS52	Single Shelf w/ 7" Aluminum Bearing	20" (508 mm) Diameter	Wood	$189.95
4WLS201-22-BS52	Single Shelf w/ 7" Aluminum Bearing	22" (559 mm) Diameter	Wood	$201.55
4WLS201-31-BS52	Single Shelf w/ 10" Aluminum Bearing	31" (787 mm) Diameter	Wood	$239.25
(2) Shelf Wood Classic Lazy Susan w/ 26"–32" (660–813 mm) Telescoping Post				
4WLS272-20-52	(2) Shelf Set	20" (508 mm) Diameter	Wood	$319.00
4WLS272-22-52	(2) Shelf Set	22" (559 mm) Diameter	Wood	$339.30
4WLS272-31-52	(2) Shelf Set	31" (787 mm) Diameter	Wood	$459.65
(3) Shelf Wood Classic Lazy Susan w/ 38"-46" (965–1169 mm) Telescoping Post				
4WLS273-20-536	(3) Shelf Set	20" (508 mm) Diameter	Wood	$471.25

KIDNEY-SHAPED SHELF

(Hinged door; not attached)

PRODUCT	DESCRIPTION	DIMS	FINISH	SLP
Wood Classic Lazy Susan - No Hardware				
4WLS401-24-52	Single Shelf	24" (610 mm) Diameter	Wood	$184.15
4WLS401-28-52	Single Shelf	28" (711 mm) Diameter	Wood	$192.85
4WLS401-32-52	Single Shelf	32" (813 mm) Diameter	Wood	$206.65
Wood Classic Lazy Susan w/ Aluminum Bearing				
4WLS401-28-BS52	Single Shelf w/ 7" Aluminum Bearing	28" (711 mm) Diameter	Wood	$239.25
4WLS401-32-BS52	Single Shelf w/ 10" Aluminum Bearing	32" (813 mm) Diameter	Wood	$262.45
(2) Shelf Wood Classic Lazy Susan w/ 26"–32" (660–813 mm) Telescoping Post				
4WLS472-24-52	(2) Shelf Set	24" (610 mm) Diameter	Wood	$382.20
4WLS472-28-52	(2) Shelf Set	28" (711 mm) Diameter	Wood	$393.70
4WLS472-32-52	(2) Shelf Set	32" (813 mm) Diameter	Wood	$475.15

NOTE: Positioning base with wheels 6260-95-2 mounts on base of cabinet. 24" Kidney is too small for swivel bearing w/stop hardware, therefore you must use post & pivot hardware. Bulk shelves (4WLS041) and hardware sold separately. Telescoping post assembly accommodates 26"–32" (660–813 mm) inner cabinet height, 1" (26 mm) diameter post system.

PIE-CUT SHELVES

(Attaches to the cabinet door)

PRODUCT	DESCRIPTION	DIMS	FINISH	SLP
Wood Classic Lazy Susan - No Hardware				
4WLS901-24-52	Single Shelf Drilled	24" (610 mm) Diameter	Wood	$184.15
4WLS901-28-52	Single Shelf Drilled	28" (711 mm) Diameter	Wood	$192.85
4WLS901-31-52	Single Shelf Drilled	31" (788 mm) Diameter	Wood	$221.85
(2) Shelf Wood Classic Lazy Susan w/ 26"–32" (660–813 mm) Telescoping Post				
4WLS942-2433-52	(2) Shelf Set for 33" Corner	24" (607 mm) Diameter	Wood	$391.50
4WLS942-24P-52	(2) Shelf Set	24" (607 mm) Diameter	Wood	$391.50
4WLS942-28P-52	(2) Shelf Set	28" (711 mm) Diameter	Wood	$406.00
4WLS942-31P-52	(2) Shelf Set	31" (788 mm) Diameter	Wood	$461.10

NOTES: Upper shelf is adjustable, lower shelf is in fixed position and post cannot be altered (adjustment mechanism).

HALF-MOON SHELVES

PRODUCT	DESCRIPTION	DIMS	MCO	CAB	FINISH	SLP
(2) Shelf Wood Classic Half-Moon Lazy Susans w/ Pivot and Slide						
4WLS882-32-570	(2) Shelf Set	32-1/4" (819 mm) W x 11-13/32" (290 mm) D x 15-15/16" (405 mm) H	12" (305 mm) - FF 13-1/4" (337 mm) - FL	BC42	Maple	$442.25
4WLS882-35-570	(2) Shelf Set	35" (889 mm) W x 14-13/32" (366 mm) D x 15-15/16" (405 mm) H	15" (381 mm) - FF 16-1/4" (413 mm) - FL	BC45	Maple	$517.65
4WLS882-38-570	(2) Shelf Set	37-3/4" (959 mm) W x 17-11/32" (443 mm) D x 15-15/16" (405 mm) H	18" (457 mm) - FF 19-1/4" (489 mm) - FL	BC48	Maple	$596.10

LIP SPECIFICATIONS WOOD CLASSIC SHELVES

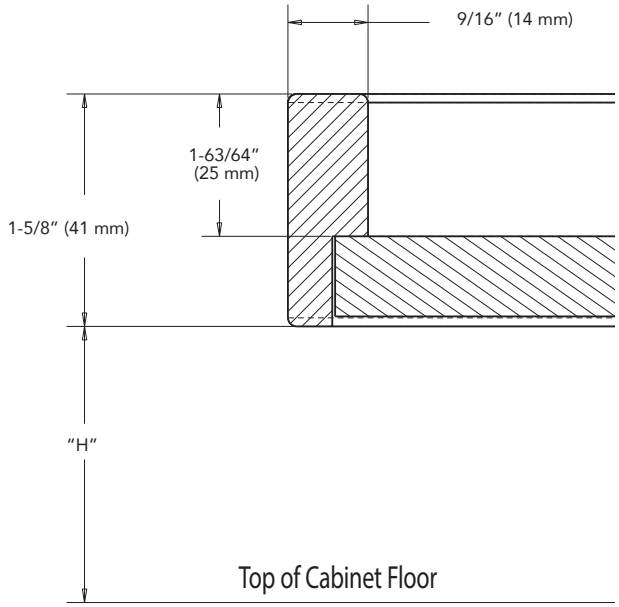

Wood Lazy Susan	
Full-Circle	**"H"**
4WLS001	3/4" (19 mm)
4WLS072	1-19/64" (33 mm)
4WLS073	1-19/64" (33 mm)
D-Shaped	**"H"**
4WLS221	1-19/64" (33 mm)
4WLS201	3/4" (19 mm)
4WLS272	1-19/64" (33 mm)
4WLS273	1-19/64" (33 mm)
Pie-Cut	**"H"**
4WLS942	1-29/64" (37 mm)
Kidney	**"H"**
4WLS401	3/4" (19 mm)
4WLS472	1-19/64" (33 mm)
Half-Moon	**"H"**
4WLS882	2-33/64" (64 mm)

Dimensions are for reference only, and may change based on hardware used, etc.

SPECIFICATIONS WOOD CLASSIC SHELVES

(Attaches to the cabinet door)

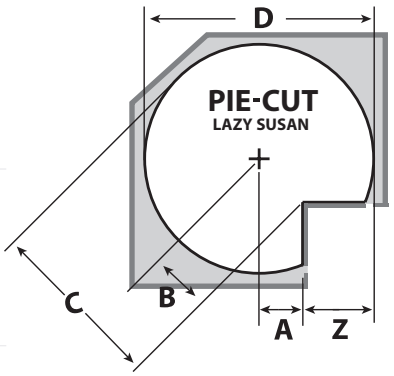

Shelf	Material	Series	A	B	C	D	Z	Post System
2433 Pie-Cut	Wood	4WLS	4-9/16"	6-7/16"	18-7/16"	24"	7-7/16" + 1/8" gap	1" DEP.
24" Pie-Cut	Wood	4WLS	1-3/8"	1-15/16"	13-15/16"	24"	10-9/16" + 1/8" gap	1" DEP.
28" Pie-Cut	Wood	4WLS	3"	4-1/4"	18-1/8"	28"	10-7/8" + 1/8" gap	1" DEP.
31" Pie-Cut	Wood	4WLS	5-1/16"	7-1/8"	22-7/16"	31"	10-5/16" + 1/8" gap	1" DEP.

DEP. = Dependently Rotating System

For custom applications, a trial installation is recommended.
Door edge profile, thickness and gaps all factor in installation.

Shelf	Material	Series	A	B	C	D	Post System
20" D-Shaped	Wood	4WLS	8-3/8"	10-5/8"	18-3/8"	20"	1" IND.
22" D-Shaped	Wood	4WLS	7-3/16"	16-5/8"	18-3/16"	22"	1" IND.
31" D-Shaped	Wood	4WLS	14"	13"	29-3/8"	31"	1" IND.

IND. = Independently Rotating System

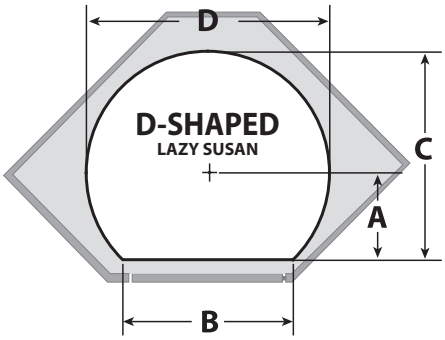

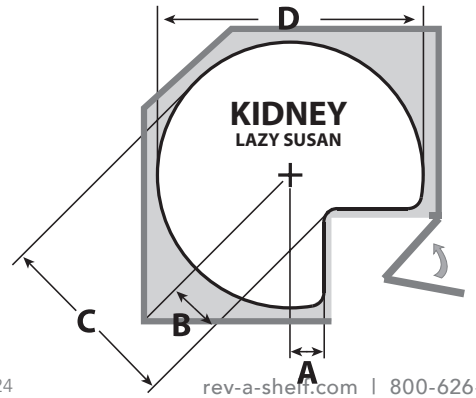

Shelf	Material	Series	A	B	C	D	Post System
24" Kidney	Wood	4WLS	1-7/16"	2-3/8"	14-3/8"	23-15/16"	1" IND.
28" Kidney	Wood	4WLS	2-7/8"	4-3/8"	18-1/4"	27-3/4"	1" IND.
32" Kidney	Wood	4WLS	4-1/16"	6"	21-15/16"	31-3/4"	1" IND.

IND. = Independently Rotating System

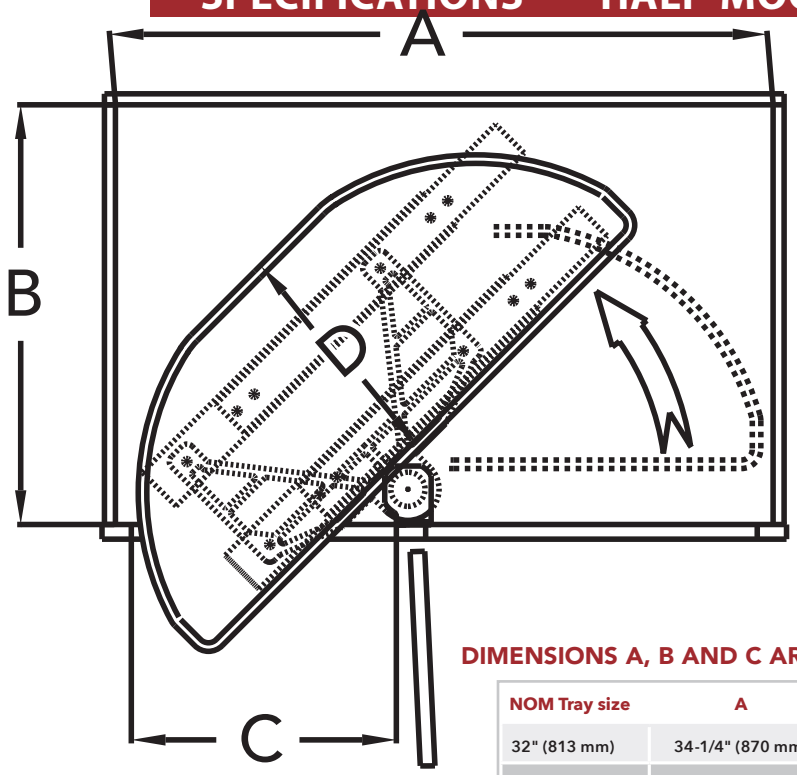

FRAMED CABINET

DIMENSIONS A, B AND C ARE MINIMUMS. 32" TRAY SHOWN IN DIAGRAM.

NOM Tray size	A	B	C	D
32" (813 mm)	34-1/4" (870 mm)	22-5/8" (575 mm)	12" (305 mm)	11-1/8" (283 mm)
35" (889 mm)	37" (940 mm)	22" (559 mm)	15" (381 mm)	14-1/8" (359 mm)
38" (965 mm)	39-1/2" (1003 mm)	22" (559 mm)	18" (457 mm)	17-1/8" (435 mm)

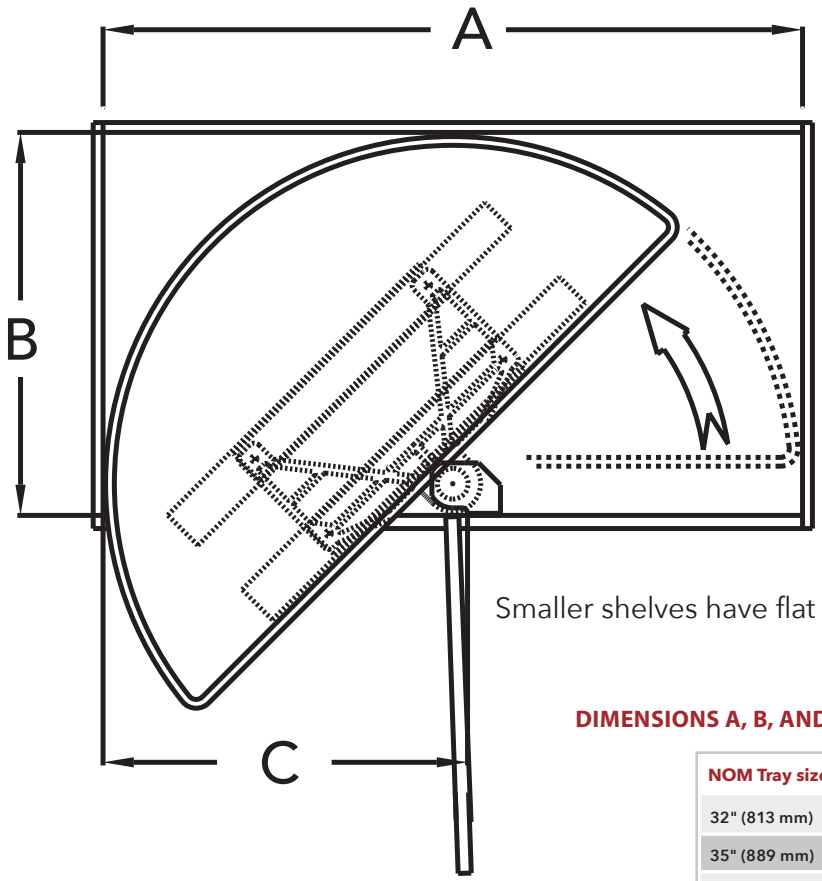

Smaller shelves have flat backs.

FRAMELESS CABINET

DIMENSIONS A, B, AND C ARE MINIMUMS. 38" TRAY SHOWN IN DIAGRAM.

NOM Tray size	A	B	C
32" (813 mm)	34-1/8" (867 mm)	22-5/8" (575 mm)	13-1/4" (337 mm)
35" (889 mm)	35-3/16" (897 mm)	22" (559 mm)	16-1/4" (413 mm)
38" (965 mm)	38-9/16" (980 mm)	22" (559 mm)	19-1/4" (489 mm)

Lazy Susan

Natural Wood

- 2-3/8" steam bent rim (3-1/4" for tall)
- 5/8" thick natural maple shelf bottom
- Chrome hardware
- Doweled (2) butt joint
- Aluminum bearings

All wood products are TSCA Title VI compliant

Our Lazy Susans are tested to exceed BHMA Class 1 Specs: 20 lbs. per square foot at 75K cycles.

All of our lazy susans are manufactured using high quality materials and are backed by a limited Lifetime Warranty. We have developed a tiered category system (Good, Better, Best) that will allow you to quickly identify which configuration will give you the features you want, with the value you require.

MADE IN THE USA

Best

Shelf Configurations

Call for Bulk Pricing 800-626-1126

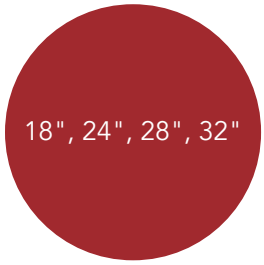

Full-Circle

D-Shaped

Kidney-Shaped

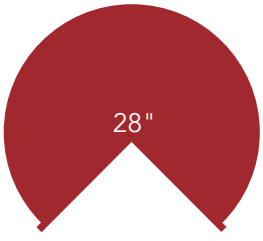

Pie-Cut

Half-Moon

See Page 323 for Hardware

FULL-CIRCLE SHELF

Natural Wood Lazy Daisy w/ Aluminum Bearing

PRODUCT	DESCRIPTION	DIMS	FINISH	SLP
LD-4NW-001-18B-1	Single Shelf w/ 7" Aluminum Bearing	18" (457 mm) Diameter	Wood	$143.55
LD-4NW-001-24B-1	Single Shelf w/ 10" Aluminum Bearing	24" (610 mm) Diameter	Wood	$207.35
LD-4NW-001-28B-1	Single Shelf w/ 10" Aluminum Bearing	28" (711 mm) Diameter	Wood	$231.30
LD-4NW-001-32B-1	Single Shelf w/ 10" Aluminum Bearing	32" (813 mm) Diameter	Wood	$274.05
(2) Shelf Natural Wood Lazy Daisy w/ 26"–32" (660–813 mm) Telescoping Post				
LD-4NW-072-18-1	(2) Shelf Set	18" (457 mm) Diameter	Wood	$250.85
LD-4NW-072-24-1	(2) Shelf Set	24" (610 mm) Diameter	Wood	$340.75
LD-4NW-072-28-1	(2) Shelf Set	28" (711 mm) Diameter	Wood	$398.75
LD-4NW-072-32-1	(2) Shelf Set	32" (813 mm) Diameter	Wood	$450.95
(3) Shelf Natural Wood Lazy Daisy w/ 38"-46" (965–1169 mm) Telescoping Post				
LD-4NW-073-1836-1	(3) Shelf Set	18" (457 mm) Diameter	Wood	$359.60

*Note: Non-drilled trays without bearings are available, remove "B" from product number.

PIE-CUT SHELF

(Attaches to the cabinet door)

(2) Shelf Natural Wood Lazy Daisy w/ 26"–32" (660–813 mm) Telescoping Post

PRODUCT	DESCRIPTION	DIMS	FINISH	SLP
LD-4NW-942-28-1	(2) Shelf Set	28" (711 mm) Diameter	Wood	$459.65

D-SHAPED SHELF

Natural Wood Lazy Daisy w/ Aluminum Bearing and Stop

PRODUCT	DESCRIPTION	DIMS	FINISH	SLP
LD-4NW-201-20BS-1	Single Shelf w/ 7" Aluminum Bearing	20" (508 mm) Diameter	Wood	$187.05
LD-4NW-201-28BS-1	Single Shelf w/ 10" Aluminum Bearing	28" (711 mm) Diameter	Wood	$237.95
LD-4NW-201-32BS-1	Single Shelf w/ 10" Aluminum Bearing	32" (813 mm) Diameter	Wood	$274.05
Tall Natural Wood Lazy Daisy w/ Aluminum Bearing and Stop				
LD-4NW-201-20TBS-1	Single Shelf w/ 7" Aluminum Bearing	20" (508 mm) Diameter	Wood	$201.55
LD-4NW-201-32TBS-1	Single Shelf w/ 10" Aluminum Bearing	32" (813 mm) Diameter	Wood	$288.55
(2) Shelf Natural Wood Lazy Daisy w/ 26"–32" (660–813 mm) Telescoping Post				
LD-4NW-272-20-1	(2) Shelf Set	20" (508 mm) Diameter	Wood	$307.40
LD-4NW-272-28-1	(2) Shelf Set	28" (711 mm) Diameter	Wood	$406.00
LD-4NW-272-32-1	(2) Shelf Set	32" (813 mm) Diameter	Wood	$464.00

HALF-MOON SHELF

Natural Wood Half Moon Lazy Susans

PRODUCT	DESCRIPTION	DIMS	MCO	CAB	FINISH	SLP
LD-4NW-882-32-1	(2) Shelf Set	32-1/8" (817 mm) W x 11-1/8" (283 mm) D x 15-15/16" (405 mm) H	12" (305 mm) - FF 13-1/4" (337 mm) - FL	BC42	Wood	$493.00
LD-4NW-882-35-1	(2) Shelf Set	34-7/8" (886 mm) W x 14-1/8" (359 mm) D x 15-15/16" (405 mm) H	15" (381 mm) - FF 16-1/4" (413 mm) - FL	BC45	Wood	$536.50
LD-4NW-882-38-1	(2) Shelf Set	38" (965 mm) W x 17-1/8" (435 mm) D x 15-15/16" (405 mm) H	18" (457 mm) - FF 19-1/4" (489 mm) - FL	BC48	Wood	$609.00

KIDNEY-SHAPED SHELF

(Hinged door; not attached)

PRODUCT	DESCRIPTION	DIMS	FINISH	SLP
Natural Wood Lazy Daisy w/ Aluminum Bearing and Stop				
LD-4NW-401-28BS-1	Single Shelf w/ 7" Aluminum Bearing	28" (711 mm) Diameter	Wood	$255.20
LD-4NW-401-32BS-1	Single Shelf w/ 10" Aluminum Bearing	32" (813 mm) Diameter	Wood	$303.05
Tall Natural Wood Lazy Daisy w/ Aluminum Bearing and Stop				
LD-4NW-401-28TBS-1	Single Shelf w/ 7" Aluminum Bearing	28" (711 mm) Diameter	Wood	$264.65
LD-4NW-401-32TBS-1	Single Shelf w/ 10" Aluminum Bearing	32" (813 mm) Diameter	Wood	$311.75
(2) Shelf Natural Wood Lazy Daisy w/ 26"–32" (660–813 mm) Telescoping Post				
LD-4NW-472-18-1	(2) Shelf Set	18" (457 mm) Diameter	Wood	$286.40
LD-4NW-472-28-1	(2) Shelf Set	28" (711 mm) Diameter	Wood	$471.25
LD-4NW-472-32-1	(2) Shelf Set	32" (813 mm) Diameter	Wood	$529.25

*Note: Non-drilled trays without bearings are available, remove "BS" from product number.

SPECIFICATIONS

NATURAL WOOD SHELVES

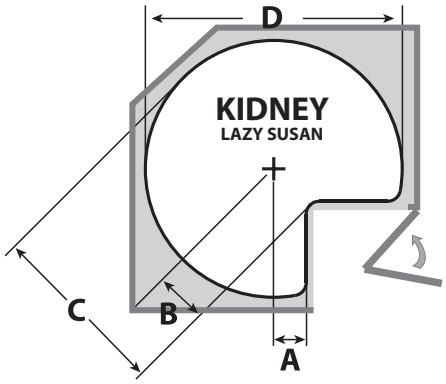

Shelf	Material	Series	A	B	C	D	Post System
18" Kidney	Maple	LD-4NW	1-7/8"	2-9/16"	11-1/2"	18"	1" IND.
24" Kidney	Maple	LD-4NW	1-7/8"	2-1/2"	11-1/2"	24"	1" IND.
28" Kidney	Maple	LD-4NW	3"	4-1/4"	18-1/8"	27-3/4"	1" IND.
32" Kidney	Maple	LD-4NW	4"	5-3/4"	21-5/8"	31-3/4"	1" IND.

IND. = Independently Rotating System

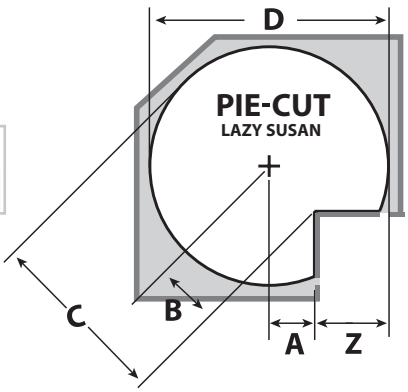

Shelf	Material	Series	A	B	C	D	Z	Post System
28" Pie-Cut	Maple	LD-4NW	3"	4-1/4"	18-1/8"	27-3/4"	10-7/8" + 1/8" gap	1" DEP.

DEP. = Dependently Rotating System

For custom applications, a trial installation is recommended.
Door edge profile, thickness and gaps all factor in installation.

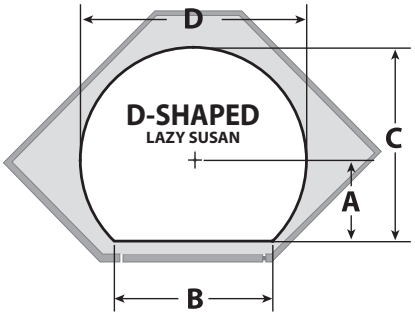

Shelf	Material	Series	A	B	C	D	Post System
20" D-Shaped	Maple	LD-4NW	8-3/8"	9-7/8"	18-1/8"	19-1/2"	1" IND.
28" D-Shaped	Maple	LD-4NW	11-7/8"	14-1/2"	25-3/4"	27-3/4"	1" IND.
32" D-Shaped	Maple	LD-4NW	13-1/2"	16-3/4"	29-3/8"	31-3/4"	1" IND.

IND. = Independently Rotating System

LIP SPECIFICATIONS NATURAL WOOD SHELVES

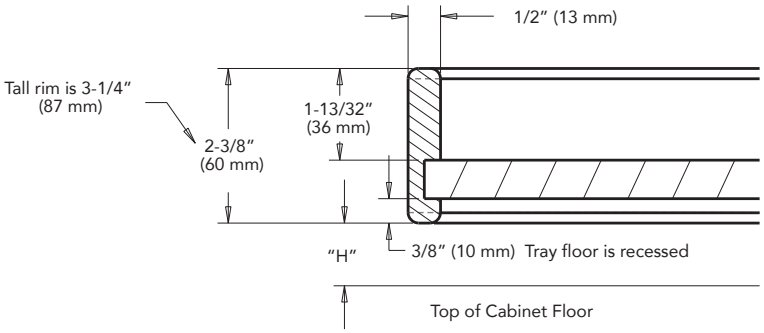

Hardware	Tray Shape	"H"
Aluminum	FC, Kidney and D-Shaped	31/32" (24 mm)
Telescoping Post	Full-Circle	7/8" (22 mm)
Telescoping Post	Kidney & D-Shaped	31/32" (24 mm)
Telescoping Post	Pie-Cut	1-3/4" (45 mm)

SPECIFICATIONS HALF-MOON NATURAL WOOD SHELVES

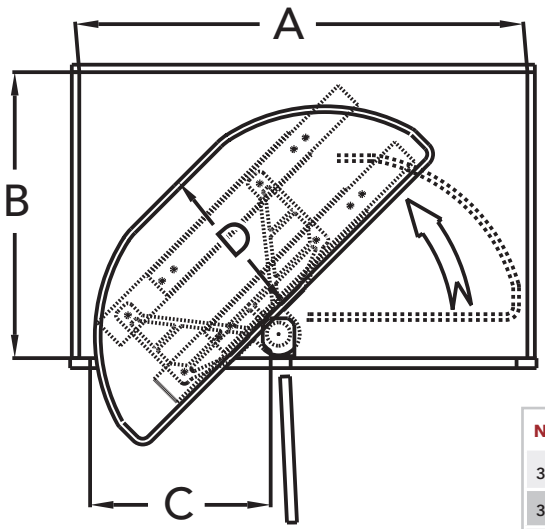

STANDARD AND 90-DEGREE BRACKETS COME WITH EACH UNIT

FRAMED CABINET

DIMENSIONS A, B AND C ARE MINIMUMS. 32" TRAY SHOWN IN DIAGRAM.

NOM Tray size	A	B	C	D
32" (813 mm)	34-1/4" (870 mm)	22" (559 mm)	12" (305 mm)	11-1/8" (283 mm)
35" (889 mm)	37" (940 mm)	22" (559 mm)	15" (381 mm)	14-1/8" (359 mm)
38" (965 mm)	39-1/2" (1003 mm)	22" (559 mm)	18" (457 mm)	17-1/8" (435 mm)

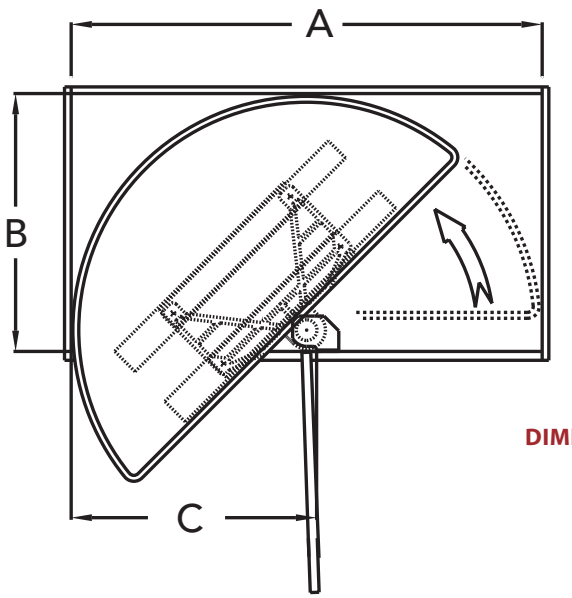

STANDARD AND 90-DEGREE BRACKETS COME WITH EACH UNIT

FRAMELESS CABINET

DIMENSIONS A, B AND C ARE MINIMUMS. 38" TRAY SHOWN IN DIAGRAM.

NOM Tray size	A	B	C
32" (813 mm)	34-1/8" (867 mm)	22" (559 mm)	13-1/4" (387 mm)
35" (889 mm)	35-3/16" (897 mm)	22" (559 mm)	16-1/4" (413 mm)
38" (965 mm)	38-9/16" (980 mm)	22" (559 mm)	19-1/4" (489 mm)

Lazy Susan

Solid Bottom Kidney

- Designed for 36″ kidney corner base cabinets
- Gray, maple or orion gray solid bottom shelves
- Single shelf set features aluminum swivel bearing with stop
- Double shelf set features independently rotating hardware and chrome-plated telescoping posts, which accommodates 26″ to 32″ inner cabinet heights
- TSCA Title VI compliant

53-401-32BSFOG-1
(2) Shelf 36" Kidney-Shaped
Lazy Susan
(Orion gray finish shown)

53472-32MP-1
(2) Shelf 36" Kidney-Shaped
Lazy Susan
(Maple finish shown)

53472-32GR-1
(2) Shelf 36" Kidney-Shaped
Lazy Susan
(Gray finish shown)

Solid Bottom Kidney-Shaped Lazy Susans w/ 10" Aluminum Bearing for 36" Kidney Cabinets

PRODUCT	DESCRIPTION	DIMS	FINISH	SLP
53-401-32BSGR-1	Single Shelf	32" (813 mm) Diameter	Gray	$271.15
53-401-32BSMP-1	Single Shelf	32" (813 mm) Diameter	Maple	$271.15
53-401-32BSFOG-1	Single Shelf	32" (813 mm) Diameter	Orion Gray	$301.60
(2) Shelf Solid Bottom Kidney-Shaped Lazy Susans for 36" Kidney Cabinets				
53472-32GR-1	(2) Shelf Set	32" (813 mm) Diameter	Gray	$448.75
53472-32MP-1	(2) Shelf Set	32" (813 mm) Diameter	Maple	$449.50
53472-32FOG-1	(2) Shelf Set	32" (813 mm) Diameter	Orion Gray	$474.15

5881 Series

Chrome Wire Half-Moon Lazy Susan

- Pivots & pulls out
- Comes with cabinet mounting hardware
- Sleek wire construction that glides on a ball-bearing slide
- Easy installation

Chrome Wire Half Moon Lazy Susan

PRODUCT	DESCRIPTION	DIMS	MCO	CAB	FINISH	SLP
5881-33CR-1	Single Shelf Pivot and Slide	33-29/32" (861 mm) W x 18-1/2" (470 mm) L x 4-5/8" (188 mm) H	18-1/2" (469 mm)	BC48	Chrome	$174.00

5LSF Series

Chrome Fence Railing

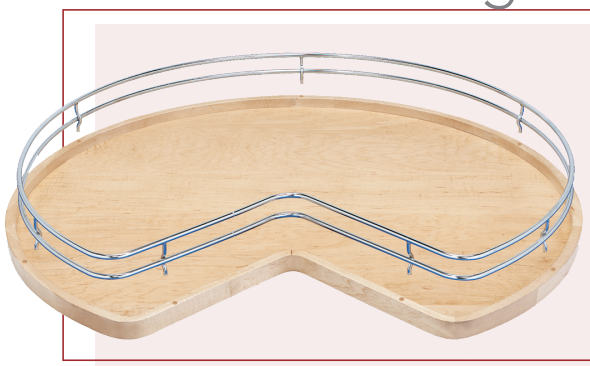

PRODUCT	DESCRIPTION	DIMS	FINISH	SLP
Full Circle Fence Rail				
5LSF018-CR	Fence Railing	18" (457 mm) Diameter	Chrome	$50.75
5LSF020-CR	Fence Railing	20" (508 mm) Diameter	Chrome	$53.65
5LSF028-CR	Fence Railing	28" (711 mm) Diameter	Chrome	$79.75
5LSF032-CR	Fence Railing	32" (813 mm) Diameter	Chrome	$87.00
Full Circle Fence Rail				
5LSF018-8CR	(8) Fence Railings	18" (457 mm) Diameter	Chrome	$47.85 ea.
5LSF020-8CR	(8) Fence Railings	20" (508 mm) Diameter	Chrome	$50.75 ea.
5LSF028-8CR	(8) Fence Railings	28" (711 mm) Diameter	Chrome	$73.95 ea.
5LSF032-8CR	(8) Fence Railings	32" (813 mm) Diameter	Chrome	$81.90 ea.
Kidney Shaped Fence Rail				
5LSF424-CR	Fence Railing	24" (310 mm) Diameter	Chrome	$82.65
5LSF428-CR	Fence Railing	28" (711 mm) Diameter	Chrome	$94.25
5LSF432-CR	Fence Railing	32" (813 mm) Diameter	Chrome	$98.60
Kidney Shaped Fence Rail				
5LSF424-8CR	(8) Fence Railings	24" (310 mm) Diameter	Chrome	$66.70 ea.
5LSF428-8CR	(8) Fence Railings	28" (711 mm) Diameter	Chrome	$82.65 ea.
5LSF432-8CR	(8) Fence Railings	32" (813 mm) Diameter	Chrome	$89.90 ea.

Not-So-Lazy Susan

NSLS-KM-28S-7

- Designed for 33" and 36" kidney corner base cabinets
- Solid wood construction, maple
- Mounts to cabinet top and bottom
- Upper kidney-shaped shelf with mid-level arrester
- Lower kidney-shaped shelf
- Up to (7) hooks
- TSCA Title VI compliant

(7) Adjustable hooks

Built-in positioner stop

NSLS-KM-28S-7
Not-So-Lazy Susan
(28" version shown)

NOTE: 154 lb. dynamic weight rating

Not-So-Lazy-Susan w/ Hardware and Hooks

PRODUCT	DESCRIPTION	DIMS	FINISH	SLP
NSLS-KM-28S-7	Single Shelf	28" (711 mm) Diameter	Wood	$478.50
NSLS-KM-32S-7	Single Shelf	32" (813 mm) Diameter	Wood	$521.25

Lazy Susan

Lazy Susan Light Kit

- 23" Angled Elli® LED linear light
- Door sensor
- 6WPlug-In power supply
  - Includes easy snap block
- Wire management clips

tresco lighting

Kit includes:
(1) Round, Single Door Sensor, (1) EquiLine Plug-In Power Supply, (1) Elli® LED Light fixture and (4) Wall Clips

Round, Single Door Sensor (Nickel)

6W Plug-In Power Supply

23" Angled Elli®

Wire Managment Adhesive Clips

Lazy Susan Lighting Kit

PRODUCT	DESCRIPTION	SLP
L-LED-LSKA1-1	Lighting Kit	$200.70

rev-a-shelf.com | 800-626-1126 | info@rev-a-shelf.com

REV-A-SHELF

Rev-A-Shelf® Hardware Kits for wood or melamine custom shelving are tested to meet and exceed BHMA Class-I specifications of 20 lbs. per square foot at 100,000 cycles. Our hardware and hardware components allow maximum flexibility, strength and aesthetic value for all custom applications.

PRODUCT	DESCRIPTION	DIMS	FINISH	SLP
Shelf Support for Full Circle Shelves				
6000-07P-52	Shelf Support	18" (457 mm) Diameter	Polymer	$19.15
Center Post Adapter for Extending				
6000-37-52	Post Adapter	20" (508 mm) Diameter	Metal	$28.40
3/4" Diameter Lower Post Assembly				
6020-96-3100-2	31" Post (787 mm)	28" (711 mm) Diameter	Bright Zinc	$23.50
6020-96-3600-2	36" Post (915 mm)	32" (813 mm) Diameter	Bright Zinc	$29.85
6000-05-7200-2-52	72" Post (1829 mm)	18" (457 mm) Diameter	Bright Zinc	$74.80
(2 Shelf) Full Circle Hardware Set for Custom Shelves				
6020-04P-52	Hardware	20" (508 mm) Diameter	Polymer	$58.75
(2 Shelf) Full Circle Hardware Set for Custom Shelves				
6020-04P-4	(6) Hardware Sets	3/4" Diameter Post (19 mm)	Polymer	$49.45 ea.
6020-04P-426	(6) Hardware Sets	38"–46" (914 mm–1168 mm) H – 3/4" (19 mm) Diameter Post	Polymer	$56.55 ea.
Full Circle Hardware Set for Rev-A-Shelf Polymer Shelves				
6022-04-52	Hardware	3/4" Diameter Post (19 mm)	Bright Zinc	$46.40
6022-04-52-526	Hardware	38"–46" (914 mm–1168 mm) H – 3/4" (19 mm) Diameter Post	Bright Zinc	$49.30
Full Circle Hardware Set for Rev-A-Shelf Polymer Shelves				
6022-04-4	(6) Hardware Sets	3/4" Diameter Post (19 mm)	Bright Zinc	$37.40 ea.
6022-04-426	(4) Hardware Sets	38"–46" (914 mm–1168 mm) H – 3/4" (19 mm) Diameter Post	Bright Zinc	$39.15ea.
Full Circle Hardware Set/Independently Rotating				
6072-04-52	(2) Shelf Full Circle Hardware Set	1" Diameter Post (26 mm)	Chrome	$117.45
6073-04-536	(3) Shelf Full Circle Hardware Set	38"–46" (914 mm–1168 mm) H – 1" (26 mm) Diameter Post	Chrome	$181.25

NOTES: 6000-07/P 5" (127 mm) DIAMETER SHELF SUPPORT FOR WOOD SHELVES (USE 6020/6022 SERIES HARDWARE KITS.)

6000-37 For joining two or more center posts together. (3/4" (19 mm) post diameter only) (6000 Series) 6020-96-3600 / 6000-05-7200 For use with full circle dependently rotating sets. 36" post for use in 36" & 42" (915-1067 mm) wall cabinet applications. 72" post for use with custom applications.

6020P For use with wood or laminate custom shelves.

6072 For use with independently rotating non-centering wood shelves.

CONTAINS: 6020 Top and bottom pivots 6000-90-2; post assembly 6020-97-2100-2; upper post assembly 6120-93-1200-2; collar assembly 6120-92-2; two full circle shelf supports 6000-07, and mounting screws.

6022 Top and bottom pivots 6000-90-2; 21" post assembly 6020-97-2100-2; 12" post assembly 6120-93-1200-2; collar assembly 6120-92-2; and mounting screws.

6072 (2) shelf hubs 6260-08-26; (2) shelf supports 6470-07-2; (1) collar 6260-92-26; (1) upper pivot 6000-91-2; (1) positioning base 6260-77-2; 22-1/2" (572 mm) lower post assembly 6470-96-2208-26; 9-1/4" (235 mm) upper post assembly (6470-93-0904-26) and mounting screws.

Hardware

4HDBM2-04-52

BM1-VL-4-SHUB-12

4B-10-8

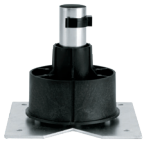

BM1-VL-4-LHUB-12

4BS-7-8

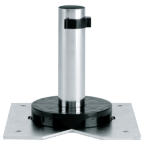

BM1-VL-04-52

BM1-04-52

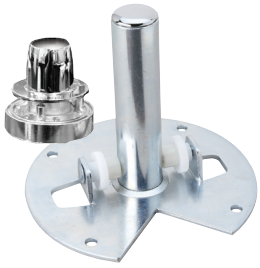

4BM1-04-52

4BM1-18-52

BM1-18-52

Single Tray Hardware				
PRODUCT	DESCRIPTION	DIMS	FINISH	SLP
BM1-VL-04-52	Value Line Single Tray Bottom Mount Post	4" (102 mm) Post	Zinc Coated	$26.95
BM1-VL-4-SHUB-12	(12) Bottom Mount Hardware Sets w/ Wall Hub	4" (102 mm) Post	Zinc Coated	$25.10 ea.
BM1-VL-4-LHUB-12	(12) Bottom Mount Hardware Sets w/ Base Hub	4" (102 mm) Post	Zinc Coated	$24.65 ea.
BM1-04-52	Single Tray Bottom Mount Post	4" (102 mm) Post	Zinc Coated	$33.15
4BM1-04-52	Wood Single Tray Bottom Mount Post	4" (102 mm) Post	Zinc Coated	$39.15
Aluminum Lazy Susan Swivel Bearing w/ Stop				
4BS-7-8	(8) 7" Bearings		Aluminum	$50.75 ea.
4BS-10-8	(8) 10" Bearings		Aluminum	$56.55 ea.
Aluminum Lazy Susan Bearing				
4B-7-8	(8) 7" Bearings		Aluminum	$42.05 ea.
4B-10-8	(8) 10" Bearings		Aluminum	$47.85 ea.
(2) Shelf Lazy Susan Post Hardware				
BM1-18-52	Two Tray Bottom Mount Post	18" (457 mm) Post	Zinc Coated	$52.05
4BM1-18-52	Wood Two Tray Bottom Mount Post	18" (457 mm) Post	Zinc Coated	$85.55
4HDBM2-04-52	Heavy Duty Two Tray Bottom Mount Post	18" (457 mm) Post	Almond Powder Coated	$79.75

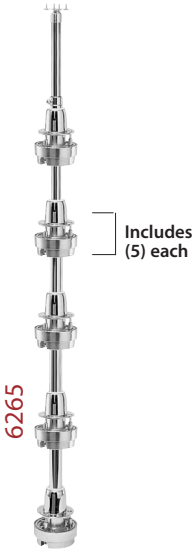

PRODUCT	DESCRIPTION	DIMS	FINISH	SLP
(2) Shelf Independently Rotating Centering Hardware				
6272-04-52	Hardware	26"–32" (661–813 mm) I.C.H. 1" (26 mm) Diameter Post	Chrome	$134.85
(5) Shelf Utility Cabinet Centering Hardware				
6265-04-52	Hardware	56"–62" (1423–1575 mm) I.C.H. 1" (26 mm) Diameter Post	Chrome	$279.00
1" Diameter Lower Post Assembly				
6360-05-7008-26-52	Post Extension	70-1/2" (1791 mm) Post 1" (26 mm) Diameter	Chrome	$88.45
6370-96-7008-26-52	1" Center Post Extension	70-1/2" (1791 mm) Post 1" (26 mm) Diameter	Chrome	$92.80
6470-96-4008-26-52	1" Center Post Extension	1" (26 mm) x 40-1/2" (1029 mm) Post	Chrome	$55.80
6260-38-1	Post Coupling for 1" Diameter	20" (508 mm) Diameter	Chrome	$35.50
Pie Cut Hardware for Wood Shelves w/ Polymer Shelf Supports (24" or larger - custom trays)				
6940-04-28P-52	Hardware Sets	3/4" (19 mm) Diameter Post	Bright Zinc/Chrome	$94.25
Pie Cut Hardware for Wood Shelves w/ Polymer Shelf Supports (24" or larger)				
6940-04-28P-4	(6) Hardware Sets	3/4" (19 mm) Diameter Posts	Bright Zinc	$85.85 ea.
Center Post & Pivot Hardware for RAS Polymer Shelves (Individual Pack)				
6942-04-28-52	Hardware		Bright Zinc	$82.65
Shelf Supports for Pie Cut Hardware for Wood Shelves				
6950-07P-52	Shelf Support	1" (26 mm) Diameter Post	Polymer	$15.95

NOTES: 6272-04-52 For use with independently rotating centering shelves.

6265-04-52 For use with independently rotating centering shelves.

6360/6370 For use with independent rotating tray kits or hardware kits. Distributor post for use when needing longer post for pantry or kidney independently rotating hardware sets. Must be used with bushing supplied by factory or with extending collar 6260-38-26.

6940-04-28/P Replaces part number 6120-04 for 24", 28", (610, 711 mm) or larger wood shelves only. Not for use with 18", 20" or 22" shelves. 1" (26 mm) dia. post.

6942-04-28-52 Replaces part number 6122-04-52 for 24" or 28" (610, 711 mm), shelves only. Not for use with 18", 20" or 22" shelves. (Contains large cam base) 1" (26 mm) dia. post.

CONTAINS: 6272-04-52 2 Shelf support assemblies, mounting hardware and telescoping center post assembly to accommodate 26"-32" (661-813 mm) I.C.H. 1" (26 mm) dia. post.

6265-04-52 Hardware for 5 shelf set with 56"-62" (1423-1575mm) I.C.H. post system. 1" (26 mm) dia. post.

6120-04-52 PC post assembly w/ shelf supports for 18-22" (457-559 mm) tray sets: also see 6940-04 kits.

6120-04-4 Top pivot 6140-03-2; cam base 6140-50-2; 21" (534 mm) post assembly 6120-97-2100-2; 12" (305 mm) post assembly 6120-93-1200-2; collar assembly 6120-92-2; shelf supports with adjustment screws 6140-07, and mounting screws.

LAZY DAISY® BY REV-A-SHELF®

LD-4BW-004

LD-4BW-004BM1

LD-4BW-004BM2

4SBS

LD-24BM2

LD-24BM1

LD-24

PRODUCT	DESCRIPTION	DIMS	FINISH	SLP
Lazy Daisy Banded Wood Hardware				
LD-4BW-004-10	(10) Hardware for Banded Wood Full Circle w/ 26"–31" (660 - 787 mm) Telescoping Posts		Zinc/Almond	$43.50 ea.
LD-4BW-00436-4	(4) Hardware for Banded Wood Full Circle 3 Tray Set w/ 38"–46" (965 - 1168 mm) Telescoping Posts		Zinc/Almond	$73.95 ea.
LD-4BW-004-4	(4) Hardware for Banded Wood Full Circle w/ 26"–31" (660 - 787 mm) Telescoping Posts		Zinc/Almond	$44.95 ea.
LD-4BW-004BM2-4	(4) Hardware for Banded Wood Full Circle Double Bottom Mounts		Zinc/Almond	$26.80 ea.
LD-4BW-20436-4	(4) Hardware for Banded Wood D Shape 3 Tray w/ 38"–46" (965 - 1168 mm) Telescoping Posts		Zinc/Almond	$62.35 ea.
LD-4BW-204-4	(4) Hardware for Banded Wood D Shape w/ 26"–31" (660 - 787 mm) Telescoping Posts		Zinc/Almond	$44.95 ea.
LD-4BW-204BM1-8	(8) Hardware for Banded Wood D Shape Single Bottom Mounts		Zinc/Almond	$35.50 ea.
LD-4BW-204BM2-4	(4) Hardware for Banded Wood D Shape Double Bottom Mounts		Zinc/Almond	$29.25 ea.
LD-4BW-404-4	(4) Hardware for Banded Wood Kidney w/ 26"–31" (660 - 787 mm) Telescoping Posts		Zinc/Almond	$43.50 ea.
Lazy Daisy Banded Wood Hardware				
4SB-7-1	7" Lazy Susan Steel Swivel Bearing		Steel	$17.40
4SB-7-10	(10) 7" Lazy Susan Steel Swivel Bearings		Steel	$12.30 ea.
4SB-10-1	10" Lazy Susan Steel Swivel Bearing		Steel	$23.95
4SB-10-10	(10) 10" Lazy Susan Steel Swivel Bearings		Steel	$15.25 ea.
4SBS-7-1	7" Lazy Susan Steel Swivel Bearing With Stop		Steel	$19.55
4SBS-7-10	(10) 7" Lazy Susan Steel Swivel Bearings w/ Stop		Steel	$14.50 ea.
4SBS-10-1	10" Lazy Susan Steel Swivel Bearing w/ Stop		Steel	$26.10
4SBS-10-10	(10) 10" Lazy Susan Steel Swivel Bearings w/ Stop		Steel	$20.30 ea.
Lazy Daisy Polymer Hardware				
LD-20-0431-5	(5) Hardware for Polymer Full Circle, Kidney, D-Shape w/ 30-35" (762 - 889 mm) Telescoping Posts		Zinc/White	$36.25 ea.
LD-24-0436-5	(5) Hardware for Polymer Kidney 3 Tray w/ 34-41" (863 - 1041 mm) Telescoping Posts		Zinc/White	$43.50 ea.
LD-24-04-5	(5) Hardware for Polymer Kidney w/ 26-31" (660 - 787 mm) Telescoping Posts		Zinc/White	$25.40 ea.
LD-24BM1-04-10	(10) Hardware for Polymer Kidney Single Bottom Mounts		Zinc/White	$17.40 ea.
LD-24BM2-04-5	(5) Hardware for Polymer Kidney Double Bottom Mounts		Zinc/White	$21.75 ea.

6882-1008-04-52
Half Moon Extension Slide Kit

6841 Rev-A-Tray Half Moon Hardware Kit

6842-04 Half Moon (2) Shelf Hardware Kit

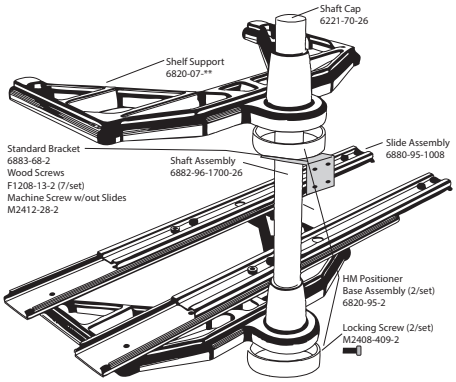

Half Moon Hardware Kit (Individual Pack)

PRODUCT	DESCRIPTION	DIMS	FINISH	SLP
6841-04-52	Single Rev-A-Tray Hardware Kit		Metal	$94.40
6842-04-570	(2) Shelf Hardware Kit without Slides		Metal	$201.55
6882-1008-04-52	Extension Slide Kit	10-1/2" (267 mm) Extension	Metal	$65.25
6882-04-52	(2) Shelf Hardware Kit with Slides		Metal	$292.90

CONTAINS:
6842-04-570 Two (2) shelf supports 6820-07-**; (2) positioning bases (6820-95-2); 1 standard bracket (6883-68-2); 15-7/8" (404 mm) 680 post (6882-96-1514-26)—Also includes template and installation instructions.
6882-1008-04-52 Slide kit only. (1) pair with screws. Individually packaged.

JPE SERIES POLYMER COMPONENT PARTS BULK

Rev-A-Shelf® custom molds many component parts for the cabinet industry, furniture industry and many other industries. We utilize high-quality, engineering-grade polymer materials such as ABS for our shelf clips. Should you require any custom polymer component parts, please contact customer service.

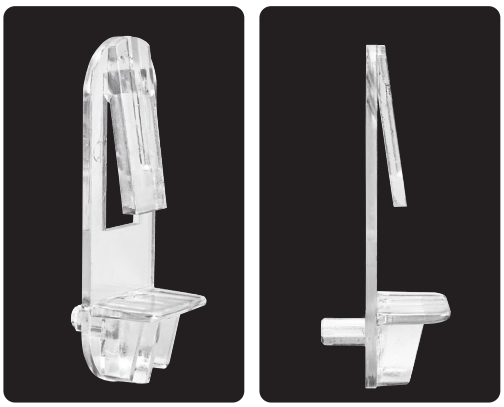

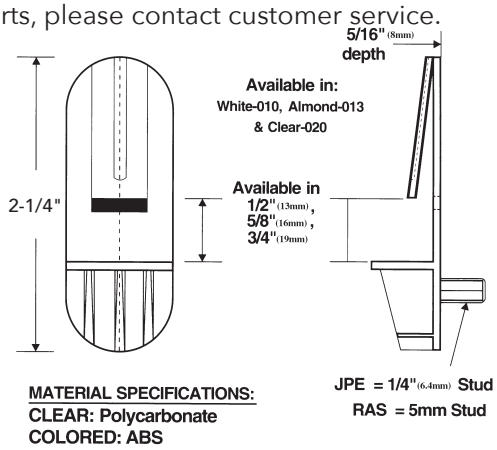

1/4" Boss Polymer Locking Shelf Clips (Bulk Pack)

PRODUCT	DESCRIPTION	DIMS	FINISH	SLP
JPE 301-12-020-1	Shelf Locking Clip	1/2" (13 mm)	Clear	$.20 ea.
JPE 301-34-0**-1	Shelf Locking Clip	3/4" (19 mm)	White or Clear	$.20 ea.
JPE 301-58-0**-1	Shelf Locking Clip	5/8" (16 mm)	White or Clear	$.20 ea.
RAS SERIES–5MM Boss Polymer Locking Shelf Clips (Bulk Pack)				
RAS 305-12-0**-1	Shelf Locking Clip	1/2" (13 mm)	White or Clear	$.20 ea.
RAS 305-34-0**-1	Shelf Locking Clip	3/4" (19 mm)	White or Clear	$.20 ea.
RAS 305-58-0**-1	Shelf Locking Clip	5/8" (16 mm)	White or Clear	$.20 ea.

NOTES:
JPE 301/RAS 305 **Denotes: White - 010 or Clear - 020 clear polycarbonate

SPECIFICATIONS

HARDWARE PART IDENTIFICATION

6940 SERIES PIE CUT

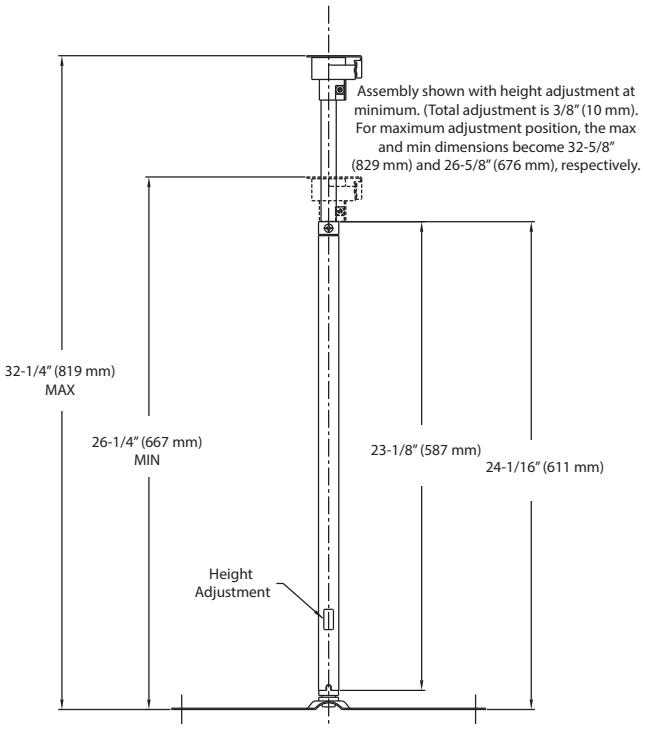

FULL CIRCLE - Dependent Rotating

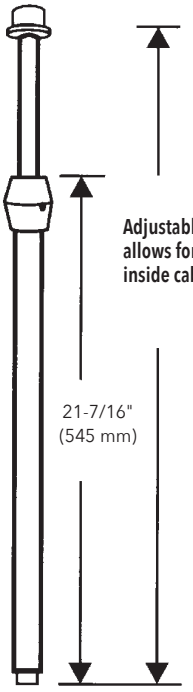

- Standard post for **6012, 2012** polymer lazy susans sets and **6022** hardware only sets.

- **6013-**-**-526** series sets have a **36"** (915 mm) base shaft and adjust up to **46"** (1169 mm). Shaft can be cut for shorter height requirements, but polymer bushing must be re-inserted in bottom of shaft.

NOTE: Order part # 6000-05-7200-2 for 72" (1829 mm) cut-to-size post.

FULL CIRCLE/KIDNEY
Independently Rotating

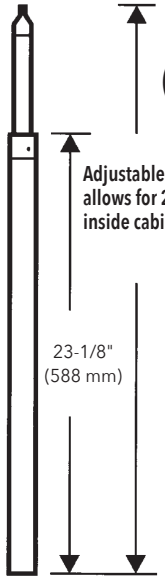

- Standard post for **6472, 2472,4472, 4WLS** Kidney, **2072, 6072** Full-Circle and **6272, 4272** D-Shaped Lazy Susan sets.

- Shaft can be cut to shorter height requirements

NOTE: Order part # 6370-96-7008-26 for 70-1/2" (1791 mm) cut-to-size post w/ bushings.

Hardware for Lazy Daisy Polymer

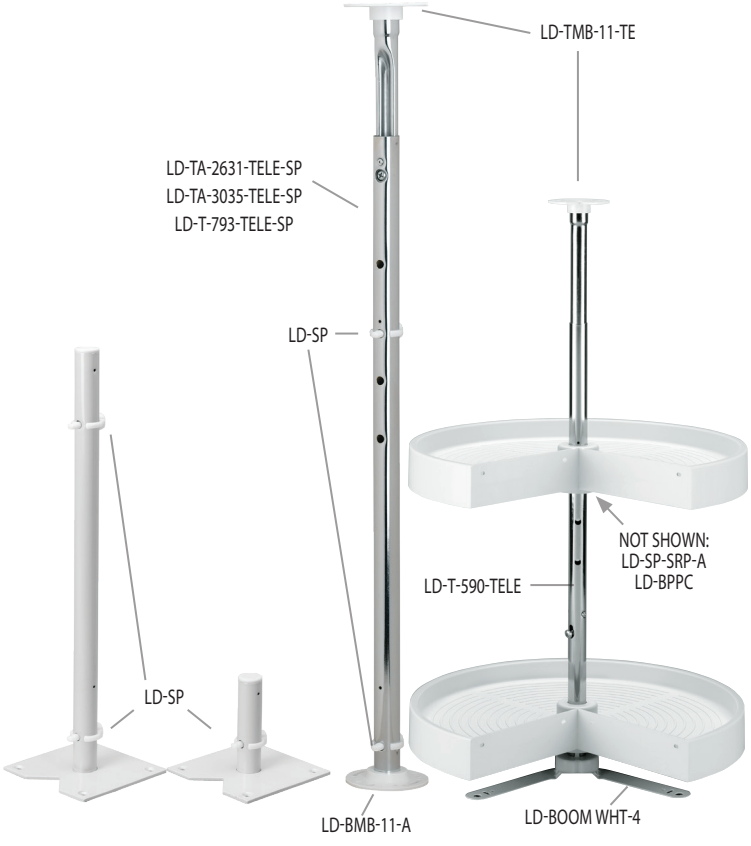

SPECIFICATIONS

HARDWARE KIT PARTS LIST

Hardware for Value Line Trays

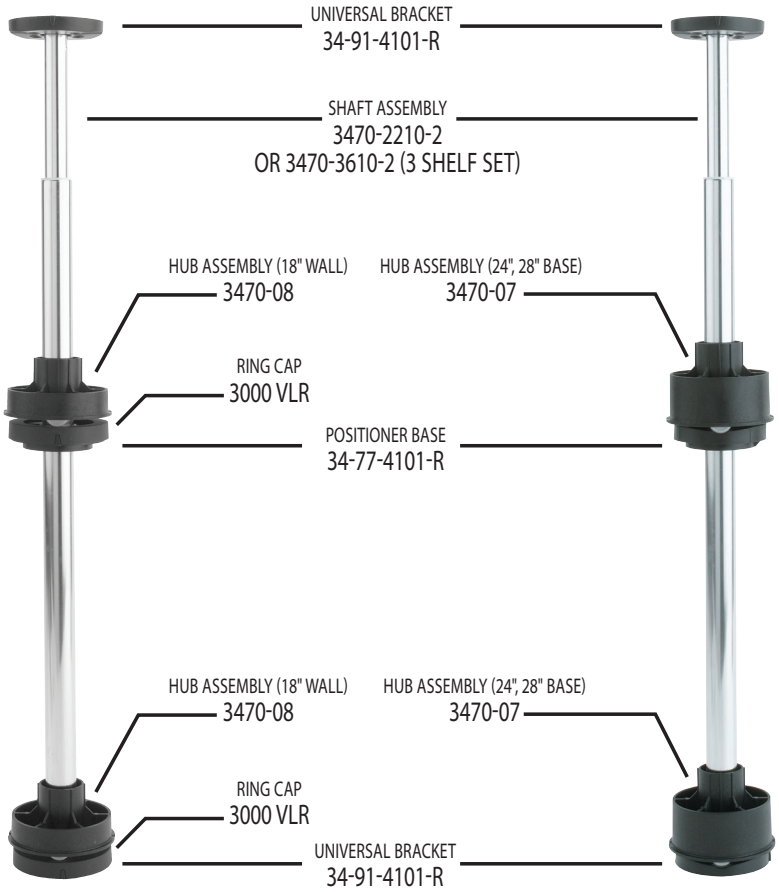

18"/20" FULL CIRCLE HARDWARE

24"/28"/32" FULL CIRCLE/KIDNEY HARDWARE

Hardware for LD Banded Wood

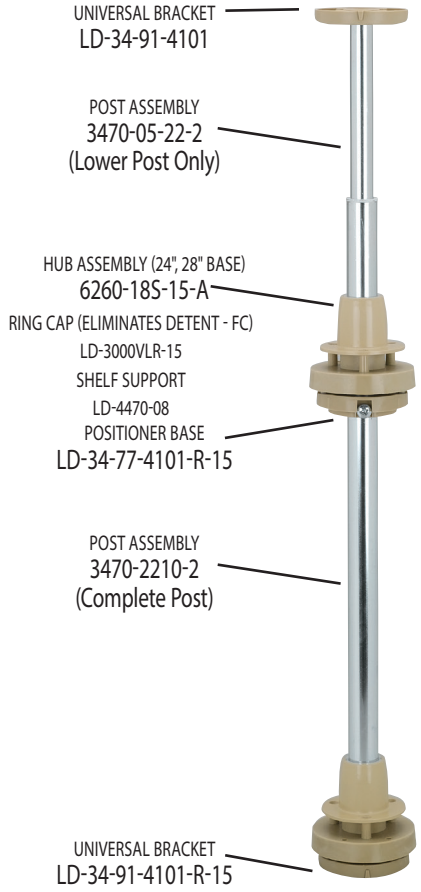

Hardware for RAS Polymer Trays

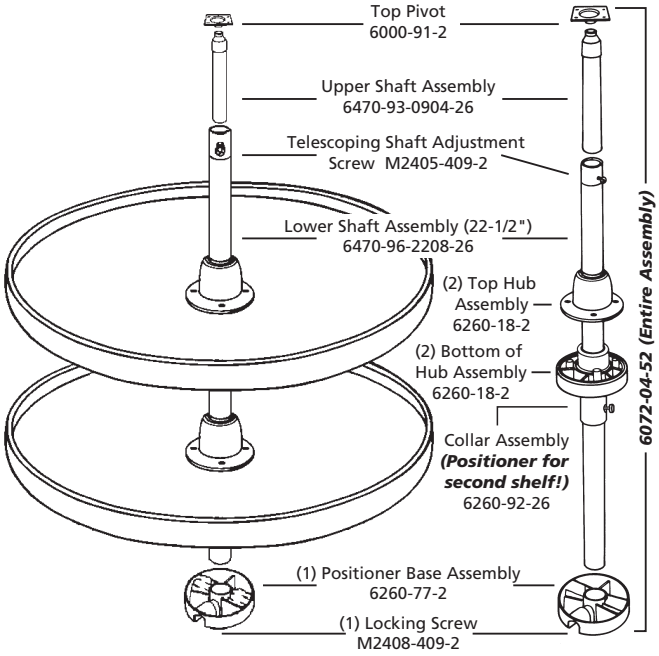

Hardware for 4WLS/LD-NATURAL

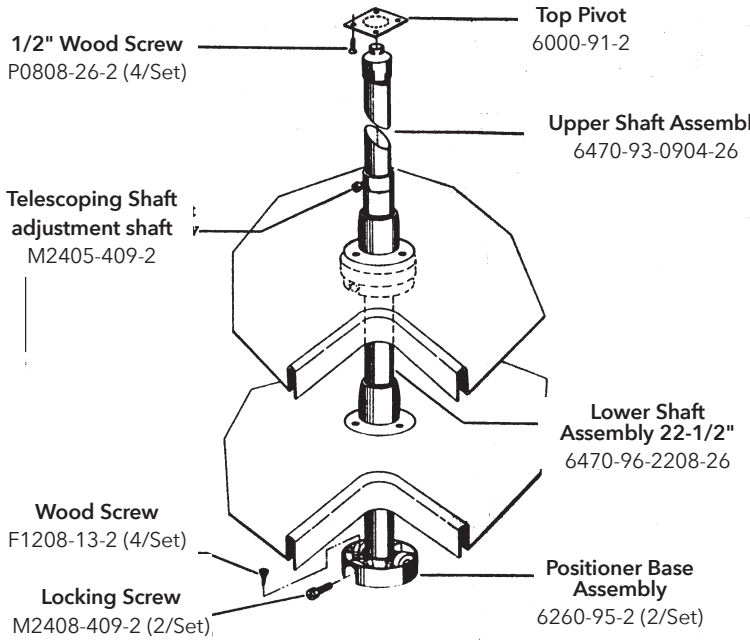

SPECIFICATIONS

HARDWARE KIT PARTS LIST

DEPENDENTLY ROTATING

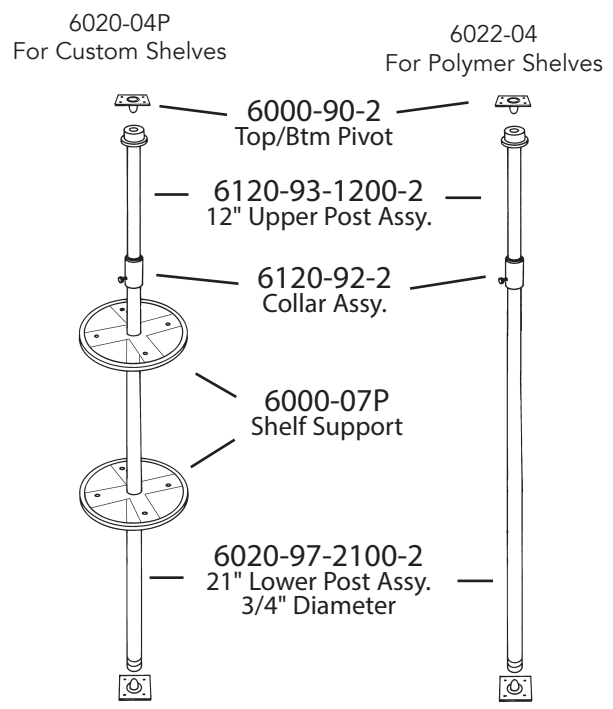

Dependently Rotating Hardware
Extension: 24"–31" (610–788 mm)

INDEPENDENTLY ROTATING

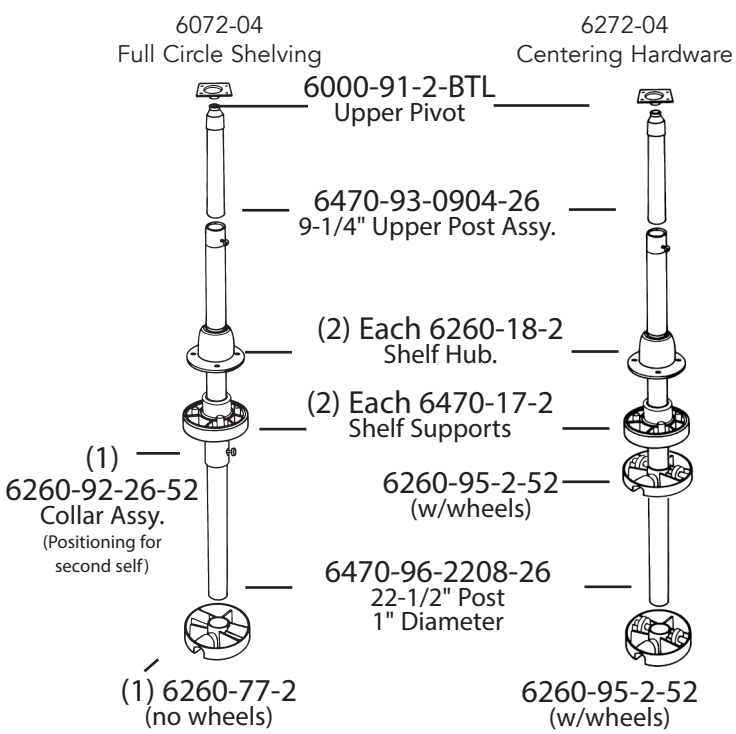

Independently Rotating Hardware
Extension: 26"–32" (661 mm–813 mm)

UTILITY CABINET CENTERING

6265-04

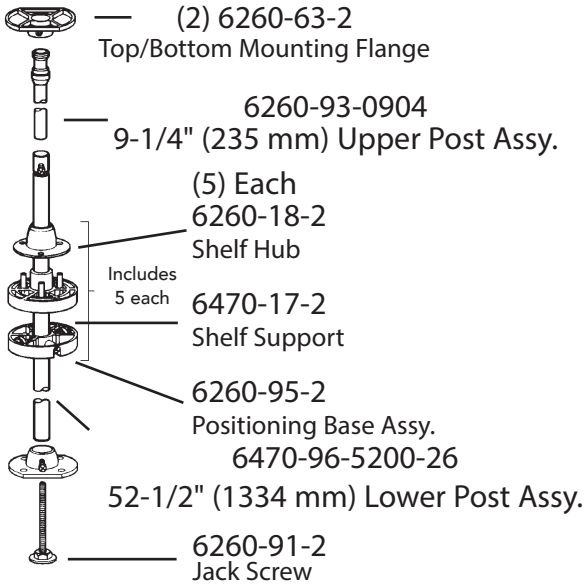

Independently Rotating Hardware
1" (26 mm) diameter post system
Std. Extension: 56"–62" (1423–1575 mm)

PIE CUT

6940-04 For Custom Shelves
6942-04 For Polymer Shelves

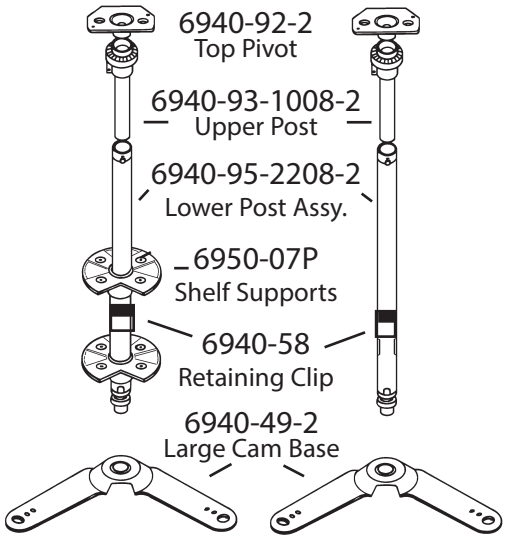

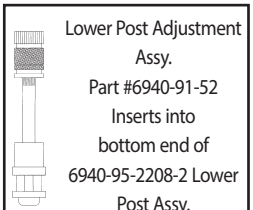

Lower Post Adjustment Assy.
Part #6940-91-52
Inserts into bottom end of 6940-95-2208-2 Lower Post Assy.

Note: For 24" (610 mm) or larger diameter shelves
Extension: 26"–32" (661–813 mm)
1" (26 mm) diameter post system

LED LIGHTING

Enhance the appearance and functionality of your home or business with energy efficient, low-heat producing, long-life LED lighting fixtures by Tresco Lighting®. Whether you're in the kitchen, millwork, office, laboratory, hospitality, furniture or store fixture industry, you're sure to find a lighting solution in our extensive catalog of options. A leader in easy-to-install LED lighting, we offer a wide array of puck lights, flexible lights, linear lights, and more. We also feature an array of controllers and dimmers, allowing you to tailor the atmosphere of your space. Have a custom application? From art to part, Tresco will design and manufacture a lighting solution based on your specific needs.

Innovation through **Illumination**™

PROP 65 WARNING FOR CALIFORNIA RESIDENTS

WARNING: These products can expose you to chemicals such as formaldehyde, lead or styrene, which are known to the State of California to cause cancer and birth defects or other reproductive harm. For more information go to www.P65Warnings.ca.gov

tresco® lighting

Table of Contents

About Us 347

SINGLE COLOR LIGHTING

Puck Lighting 348
- **12VDC**
- 3W Power Pockit® 348
- 3W EquiLine Puck 350
- **120V**
- Pockit® 120-M 352

Linear Lighting 356
- **12VDC**
- FineLine 2.0 356
- SimpLED 2.0 358
- Eurolinx 2.0 360

Tape Lighting 362
- **12VDC**
- FlexTape® 362
- EquiLine Tape LED 364
- COB FlexTape® 368
- **24VDC**
- COB FlexTape® 369

Flexible Silicone Lighting 372
- **12VDC/24VDC**
- Side-Emitting Neoloop 372
- Top-Emitting Neoloop 373

Panel Lighting 376
- **24VDC**
- Snip 376
- Snap 377

Extrusions 370
- Infinex 380

Components 384
- Power Supplies 384
- Controllers 392

Technology 404
- Swidget 404

Install Accessories 406

Color Key

12VDC
Lighting that uses 12VDC power supplies.

24VDC
Lighting that uses 24VDC power supplies.

120V
Lighting that uses standard 120V wall outlets.

Required Accessories
Accessories required for the light to work.

Optional Accessories
Accessories that add functionality, but not required for the light to work.

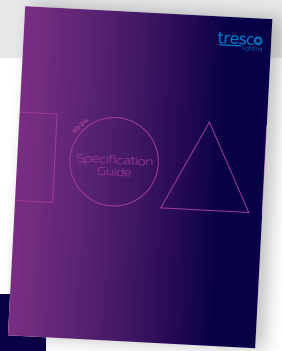

Scan to view our full Tresco Catalog!

COMPLIMENTARY
Layout Design Services

The increasingly popular application of LED lighting is new to many design professionals. Let our Lighting Layout Assistance Program guide you in specifying the ideal product and wiring schematic for your next residential or commercial project.

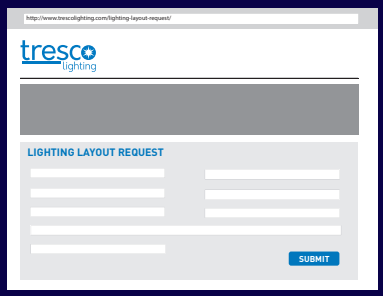

Visit: trescolighting.com/layout

Fill out the form and upload your drawings.

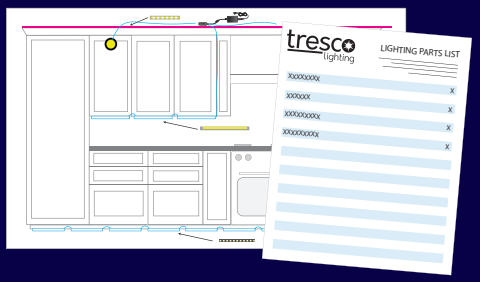

Receive your professionally engineered schematic and matching parts list.

GET STARTED TODAY »

trescolighting.com/layout

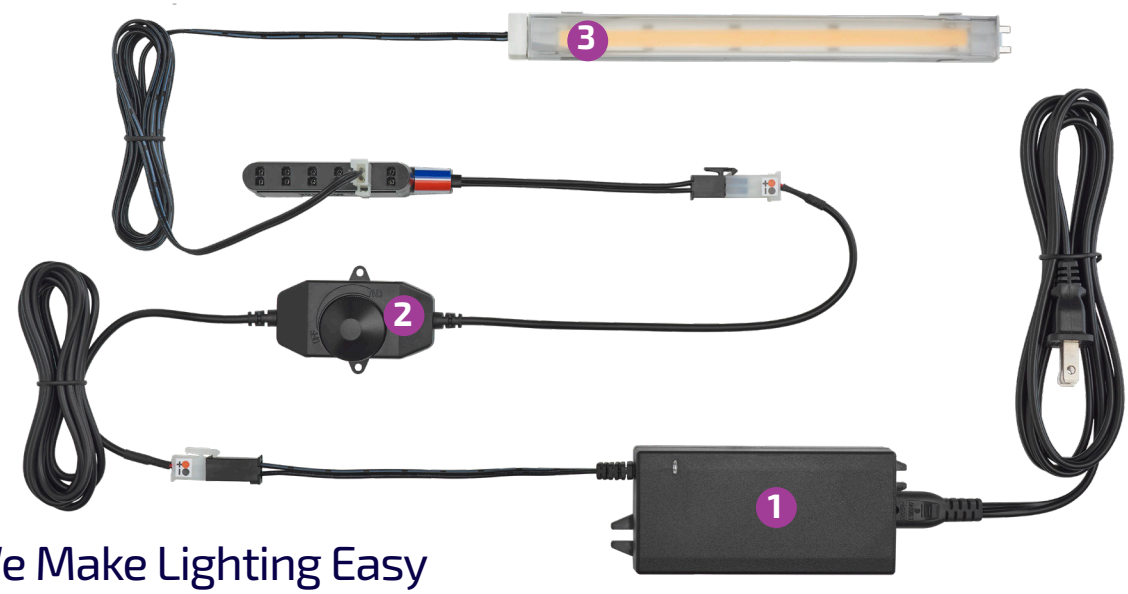

We Make Lighting Easy

Easy as 1 - 2 - 3.

1) Universal power supply
2) Controller connects to the power supply
3) Light fixture connects to the controller

Universal System

Tresco®'s in-house design and manufacturing teams create LED lights to work with one power source. Other products require different power supplies for different lights, but Tresco®'s LED lights are designed to work with a single 12VDC or 24VDC power supply. No more wiring nightmares.

Leader in LED Lighting

Tresco® Lighting is the leader in premier lighting solutions for store fixtures, commercial applications, residential cabinetry, laboratory and hospitality furniture. With over 30 years of "Innovation Through Illumination" we proudly design and manufacture a full line of superior quality LED lighting options that are UL/ETL listed. Tresco® Lighting is the trusted brand for all your project needs.

Tresco® was founded in 1989 to meet a growing demand for quality cabinet and casework lighting. In 1992, we designed and offered the first UL-listed, under cabinet track lighting system in North America. This ingenuity and success led to the rapid development and expansion of product lines targeting different segments of business. Over 30 years later, our goal remains the same: provide innovative, functional and design savvy products for the office, laboratory, hospitality, furniture, store fixture, millwork and kitchen industries. We welcome you to browse our catalog and learn more about our company and product offering.

The Company We Keep

We are members in good standing with the most respected names in the business. Our customers can be confident that they're dealing with a professional, reputable, and reliable leader in the LED lighting industry.

BKBG BATH & KITCHEN BUYING GROUP
NKBA
CMA Cabinet Makers Association
IES
ACSP ASSOCIATION OF CLOSET AND STORAGE PROFESSIONALS
idc interior designers of canada designers d'intérieur du canada

Power Pockit® 3W

12VDC

3W	234 Lumens	120°

The Power Pockit® 3W is a versatile choice offering flood and task lighting that can be used for interior cabinets, under cabinets and store displays. This 3W energy efficient LED provides a crisp, uniform wash over illuminated objects.

Available Finishes:

Dimensions:

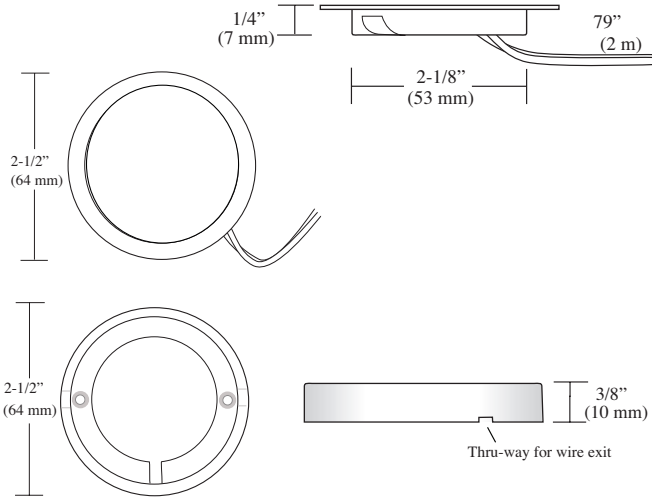

Specifications:

Wattage	Lumens	Efficacy (lm/W)	Input Voltage	Diode Life	Max Per 60W Power Supply	Mounting	Warranty	Beam Angle
3W	234	78	12VDC	50,000 Hours	20 Fixtures	Recess/ Surface	5 Year	120°

Photometric Data

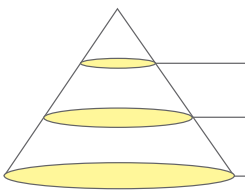

Height	Light Output	Beam Area
1ft (.3 m)	81.30Fc (875.1lx)	3.1ft L x 3.1ft W (1 m L x 1 m W)
3ft (.9 m)	9.03Fc (97.2lx)	9.2ft L x 9.2ft W (2.8 m L x 2.8 m W)
6ft (1.8 m)	2.26Fc (24.3lx)	18.4ft L x 18.4ft W (5.6 m L x 5.6 m W)

L-POC-3LEDSFR-C Tested

Color Temperature

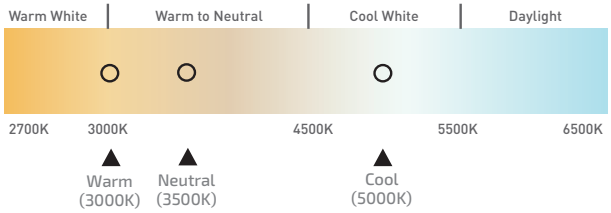

All product dimensions and specifications are subject to change without prior notice.

12VDC 3W Power Pockit® Series

Required
Optional

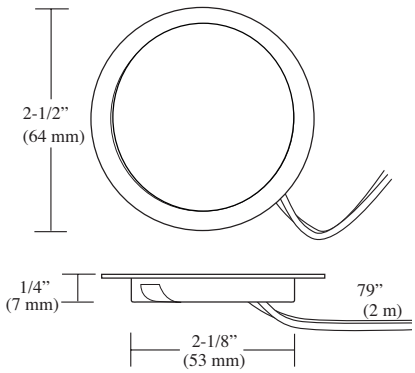

Part #	Description	SLP
L-POC-3LEDSFR-CBL-1	3W 5000K Black LED Pockit® Light	$76.40
L-POC-3LEDSFR-CNI-1	3W 5000K Nickel LED Pockit® Light	$76.40
L-POC-3LEDSFR-CWH-1	3W 5000K White LED Pockit® Light	$76.40
L-POC-3LEDSFR-NNI-1	3W 3500K Nickel LED Pockit® Light	$76.40
L-POC-3LEDSFR-NBL-1	3W 3500K Black LED Pockit® Light	$76.40
L-POC-3LEDSFR-WBL-1	3W 3000K Black LED Pockit® Light	$76.40
L-POC-3LEDSFR-WNI-1	3W 3000K Nickel LED Pockit® Light	$76.40
L-POC-3LEDSFR-WWH-1	3W 3000K White LED Pockit® Light	$76.40

2-1/4" (57 mm) hole required for recessed mounting; 1/4" (6 mm) recessed depth.
Power Pockit® includes Surface Mount Ring, AMP® Connector, and 79" (2 m) of input lead.

12VDC Power Supplies

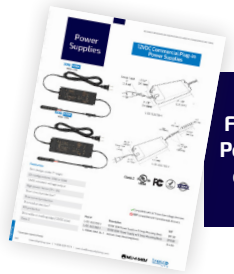

For details see Power Supplies on Page 384.

Part #	Description	SLP
L-DC-SLELT30-1	30W 12VDC Power Supply w/6 Snap Mounting Block*	$91.80
L-DC-SLELT60-1	60W 12VDC Power Supply w/6 Snap Mounting Block*	$118.90
L-DC-ELT6WP-CON-1	6W 12VDC Wall Mount Power Supply w/3 Snap Block*	$30.90
L-DC-ELT15WP-CON-1	15W 12VDC Wall Mount Power Supply w/6 Snap Block*	$40.30
L-DC-EQ30-1	30W 12VDC Equiline Power Supply w/6 Snap Block*	$62.80
L-DC-EQ60-1	60W 12VDC Equiline Power Supply w/6 Snap Block*	$84.35
L-DCE30D-CON-1	30W 12VDC Hardwire Dimmable LED Power Supply†	$119.50
L-DCE60D-CON-1	60W 12VDC Hardwire Dimmable LED Power Supply†	$194.00
L-12DCH60X1-1	60W 12VDC Commercial/Industrial Metal Hardwire Dimmable Power Supply§	$199.55
L-12DCH60X3-1	180W 12VDC Commercial/Industrial Metal Hardwire Dimmable Power Supply§	$416.30

* Dimmable on trailing edge (12VDC side). Mounting block and power cord are included.
† Dimmable by LED line voltage (120V) wall dimmers. Mounting block included.
§ Dimmable by LED line voltage (120V) wall dimmers. Mounting block not included
All hardwire power supplies require an electrician for install.

COMPONENTS: POWER SUPPLIES, CONTROLLERS & MORE SEE PAGE 384.

Economy Series

12VDC

3W EquiLine Puck

3W	218 Lumens	100°

With recessed or surface mount ability, EquiLine LED Pucks are perfect for use in a wide range of applications. Designed for the economically conscious, they feature a slim profile and a 79" (2 m) starter cord attached with an unattached AMP® connector for easy wire routing.

Dimensions:

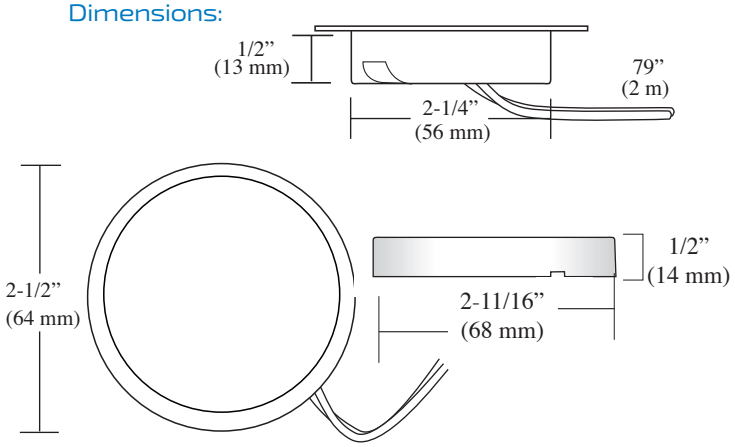

Available Finishes:

Black (BL) Nickel (NI)

Specifications:

Wattage	Lumens	Efficacy (lm/W)	Input Voltage	Diode Life	Max Per 60W Power Supply	Mounting	Warranty	Beam Angle
3W	218	73	12VDC	25,000 Hours	20 Fixtures	Recess/ Surface	2 Year	100°

Photometric Data

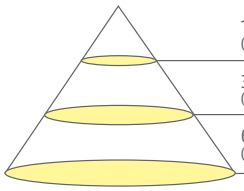

Height	Light Output	Beam Area
1ft (.3 m)	89.00Fc (958lx)	2ft diameter (.6 m diameter)
3ft (.9 m)	9.89Fc (106.5lx)	7ft diameter (2.1 m diameter)
6ft (1.8 m)	2.47Fc (26.6lx)	14ft diameter (4.3 m diameter)

L-POC-3EQFR-C Tested

Color Temperature

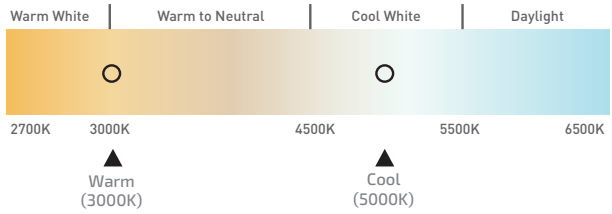

trescolighting.com | 1-800-227-1171 | cservice@trescolighting.com

REV-A-SHELF tresco lighting

EquiLine Puck Light

12VDC EquiLine Puck Light

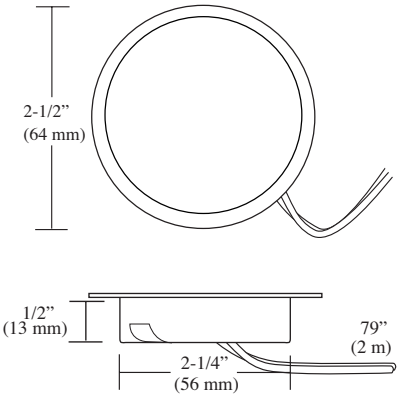

Part #	Description	SLP
L-POC-3EQFR-CBL-1	3W EquiLine Puck 5000K, Black	$33.70
L-POC-3EQFR-CNI-1	3W EquiLine Puck 5000K, Nickel	$33.70
L-POC-3EQFR-WBL-1	3W EquiLine Puck 3000K, Black	$33.70
L-POC-3EQFR-WNI-1	3W EquiLine Puck 3000K, Nickel	$33.70

2-1/4" (57 mm) hole required for recessed mounting; 1/2" (13 mm) recessed depth.
EquiLine includes starter cord 79" (2 m) and AMP® Connector with each light.
Surface mount ring sold separately.

12VDC EquiLine Puck Surface Ring

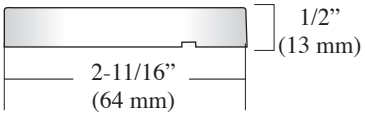

Part #	Description	SLP
L-SMR-2LED-BL-1	EquiLine Puck Surface Ring, Black	$6.25
L-SMR-2LED-NI-1	EquiLine Puck Surface Ring, Nickel	$6.25

12VDC Power Supplies

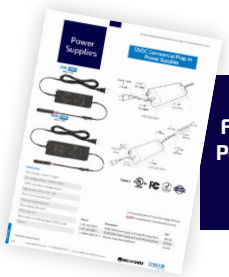

For details see Power Supplies on Page 384.

Part #	Description	SLP
L-DC-SLELT30-1	30W 12VDC Power Supply w/6 Snap Mounting Block*t	$91.80
L-DC-SLELT60-1	60W 12VDC Power Supply w/6 Snap Mounting Block*	$118.90
L-DC-ELT6WP-CON-1	6W 12VDC Wall Mount Power Supply w/3 Snap Block*	$30.90
L-DC-ELT15WP-CON-1	15W 12VDC Wall Mount Power Supply w/6 Snap Block*	$40.30
L-DC-EQ30-1	30W 12VDC Equiline Power Supply w/6 Snap Block*	$62.80
L-DC-EQ60-1	60W 12VDC Equiline Power Supply w/6 Snap Block*	$84.35
L-DCE30D-CON-1	30W 12VDC Hardwire Dimmable LED Power Supply†	$119.50
L-DCE60D-CON-1	60W 12VDC Hardwire Dimmable LED Power Supply†	$194.00
L-12DCH60X1-1	60W 12VDC Commercial/Industrial Metal Hardwire Dimmable Power Supply§	$199.55
L-12DCH60X3-1	180W 12VDC Commercial/Industrial Metal Hardwire Dimmable Power Supply§	$416.30

* Dimmable on trailing edge (12VDC side). Mounting block and power cord are included.
† Dimmable by LED line voltage (120V) wall dimmers. Mounting block included.
§ Dimmable by LED line voltage (120V) wall dimmers. Mounting block not included
All hardwire power supplies require an electrician for install.

COMPONENTS: POWER SUPPLIES, CONTROLLERS & MORE SEE PAGE 384.

Pockit® 120-M

120V

4W	270 Lumens	100°

The Pockit® 120-M is the next generation of our popular Pockit® 120 linkable series. Featuring a smaller size, each fixture has a built-in dimmable driver and the commercial grade, all-metal construction provides optimal heatsinking with more than double the light output of the original Pockit® 120-L. No external power supply needed, just plug in and start linking away!

c UL us LISTED | DIMMABLE | LUNIFORM | 3 YEAR WARRANTY

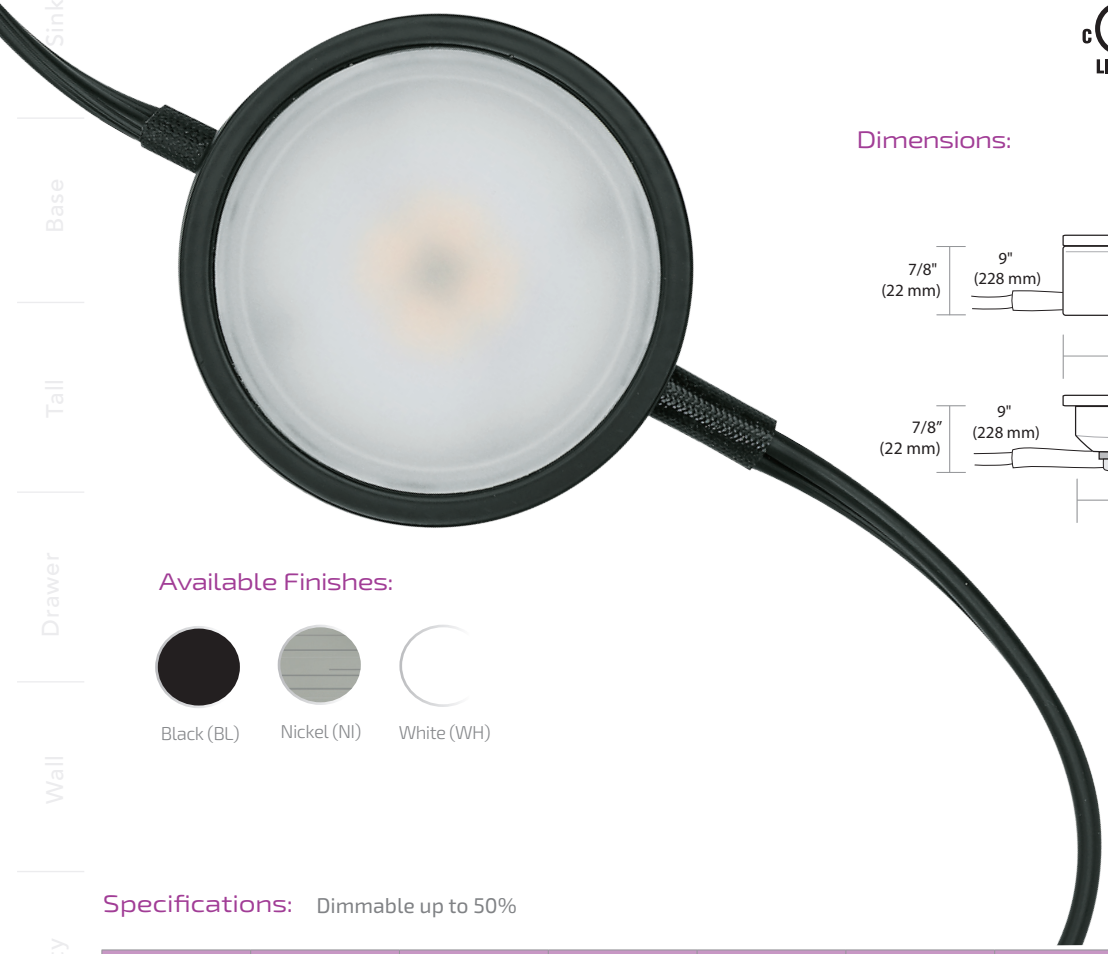

Dimensions:

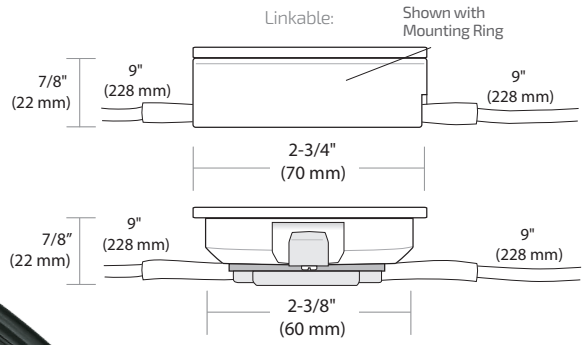

Available Finishes:

Black (BL) | Nickel (NI) | White (WH)

Specifications: Dimmable up to 50%

Wattage	Lumens	Efficacy (lm/W)	Input Voltage	Diode Life	Max Continuous Run	Mounting	Warranty	Beam Angle
4W	270	67.5	120V	30,000 Hours	45 Fixtures	Recess/ Surface	3 Year	100°

Photometric Data

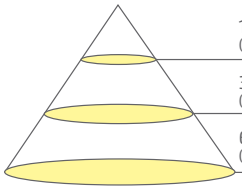

Height	Light Output	Beam Area
1ft (.3 m)	110.5Fc (1189.4lx)	2.3ft L x 2.3ft W (.7 m L x .7 m W)
3ft (.9 m)	12.28Fc (132.2lx)	6.9ft L x 6.9ft W (2.1 m L x 2.1 m W)
6ft (1.8 m)	3.07Fc (33.0lx)	13.9ft L x 13.8ft W (4.2 m L x 4.2 m W)

L-MPOC-4W-120NL-C Tested

Color Temperature

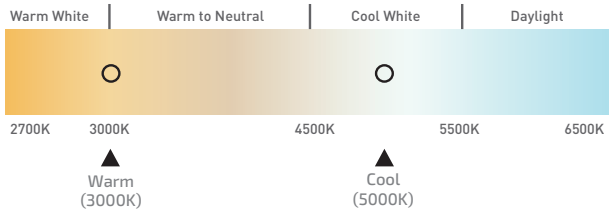

REV-A-SHELF tresco lighting

120V Pockit®120-M-Linkable

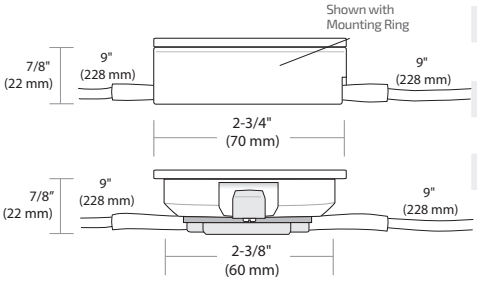

Part #	Description	SLP
L-MPOC-4W-120L-CBL-1	120V Pockit® 120-M Linkable, Cool, Black	$79.00
L-MPOC-4W-120L-CNI-1	120V Pockit® 120-M Linkable, Cool, Nickel	$79.00
L-MPOC-4W-120L-CWH-1	120V Pockit® 120-M Linkable, Cool, White	$79.00
L-MPOC-4W-120L-WBL-1	120V Pockit® 120-M Linkable, Warm, Black	$79.00
L-MPOC-4W-120L-WNI-1	120V Pockit® 120-M Linkable, Warm, Nickel	
L-MPOC-4W-120L-WWH-1	120V Pockit® 120-M Linkable, Warm, White	$79.00

2-3/8" (60 mm) hole required for recessing.
Surface mount ring included with each light.
Dimmable to 50% by standard LED wall dimmers.

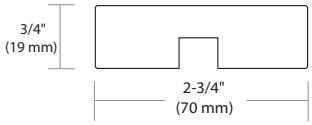

120V Pockit® 120-M Starter Cord

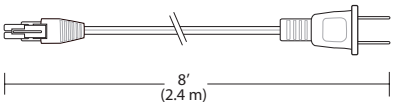

Part #	Description	SLP
L-MPOC-PKT8-BL-1	120V Pockit® 120-M, 8 ft. (2.4 m) Starter Cord, Black	$12.90
L-MPOC-PKT8-WH-1	120V Pockit® 120-M, 8 ft. (2.4 m) Starter Cord, White	$12.90

120V Link Cord/Extension

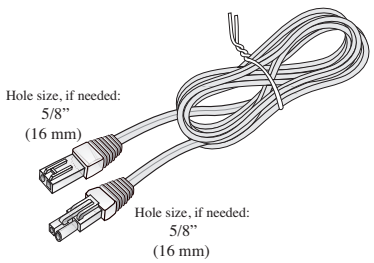

Part #	Description	SLP
L-FPOC-LINKA-25-BL-1	10" (25 cm) Black Pockit® 120-L/M Linking Cord	$3.60
L-FPOC-LINKA-25-WH-1	10" (25 cm) White Pockit® 120-L/M Linking Cord	$3.60
L-FPOC-LINKA-60-BL-1	24" (60 cm) Black Pockit® 120-L/M Linking Cord	$4.65
L-FPOC-LINKA-60-WH-1	24" (60 cm) White Pockit® 120-L/M Linking Cord	$4.65
L-FPOC-LINKA-120-BL-1	48" (120 cm) Black Pockit® 120-L/M Linking Cord	$6.50
L-FPOC-LINKA-120-WH-1	48" (120 cm) White Pockit® 120-L/M Linking Cord	$6.50
L-FPOC-LINKA-180-BL-1	72" (180 cm) Black Pockit® 120-L/M Linking Cord	$8.70
L-FPOC-LINKA-180-WH-1	72" (180 cm) White Pockit® 120-L/M Linking Cord	$8.70

120V Round Switch

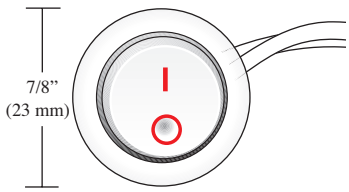

Part #	Description	SLP
L-RDSW-1M-120-BL-1	120V Black Round Rocker Switch w/ 39" (1 m) Lead	$19.75
L-RDSW-1M-120-WH-1	120V White Round Rocker Switch w/ 39" (1 m) Lead	$19.75
L-RDSW-2M-120-BL-1	120V Black Round Rocker Switch w/ 79" (2 m) Lead	$22.60
L-RDSW-2M-120-WH-1	120V White Round Rocker Switch w/ 79" (2 m) Lead	$22.60

3/4" (19 mm) hole required.

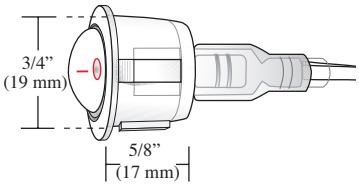

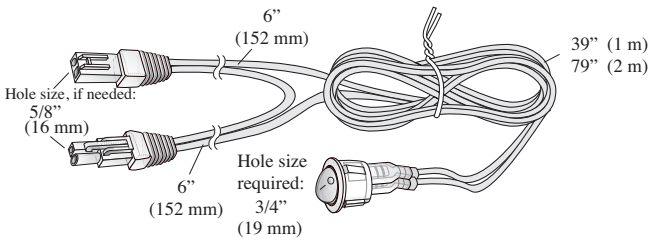

120V Hardwire Boxes

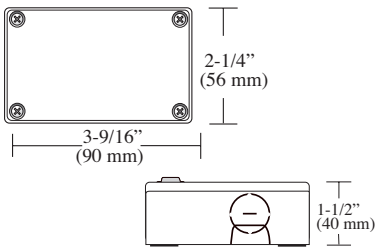

Part #	Description	SLP
L-HWB-BL-T5-1	T5 Black Hardwire Box, without Switch	$17.25
L-HWB-BL-T5-S-1	T5 Black Hardwire Box, with Switch	$17.25

Maximum (10) light fixtures per hardwire box.
Must use Pockit® 120L/M Adaptor.

120V Pockit® 120-L/M Adaptor
for Hardwire Box

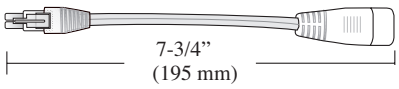

Part #	Description	SLP
L-FPOC-HWB-ADP-BL-1	Pockit® 120-M Adaptor for Hardwire Box, Black	$3.45
L-FPOC-HWB-ADP-WH-1	Pockit® 120-M Adaptor for Hardwire Box, White	$3.45

Required when using Hardwire Box.

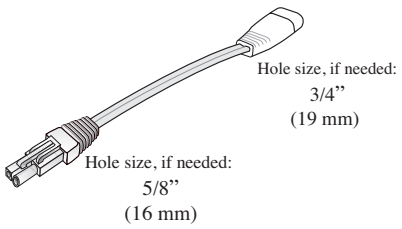

NOTE: Must use hardwire box when used with a wall dimmer. Do not dim a receptacle.

How to Connect Using Hardwire Box:

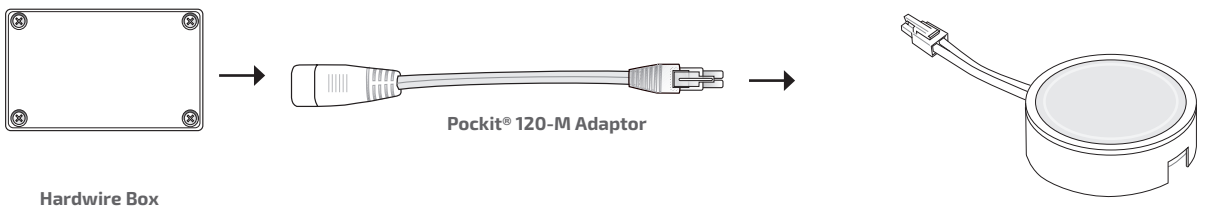

Hardwire Box

120V Wi-Fi Enabled LED Wall Controllers

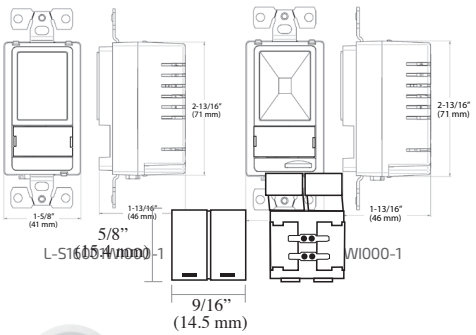

Part #	Description	SLP
L-S16001WI000-1	120VAC 300W/600W Swidget Toggle Switch w/ Wi-Fi Control Insert, White	$142.70
L-SD300WI000-1	120VAC 150W/300W Swidget Dimmer Switch w/ Wi-Fi Control Insert, White	$160.10

COMPONENTS: CONTROLLERS & MORE SEE PAGE 384.

JACOBSEN
Elderflower Lemonade
Elderflower Lemonade

12VDC

FineLine 2.0

4.4W/ft. (14.4W/m)	330 Lumens per ft. (1082 per meter)	120°

Pencil thin but still packing a big punch, FineLine is the unobtrusive way to provide stunning lighting to casework, displays, store fixtures and more. The low-profile design features a milk diffuser for even illumination, Luniform technology, and with optional manual or remote-control dimmers, creating the perfect atmosphere is effortless.

c UL us LISTED · CLASSIFIED UL EPH · CE · DIMMABLE · CLOSET LISTED · LUNIFORM · 5 YEAR WARRANTY

Available Finishes:

Aluminum (AL)

Dimensions:

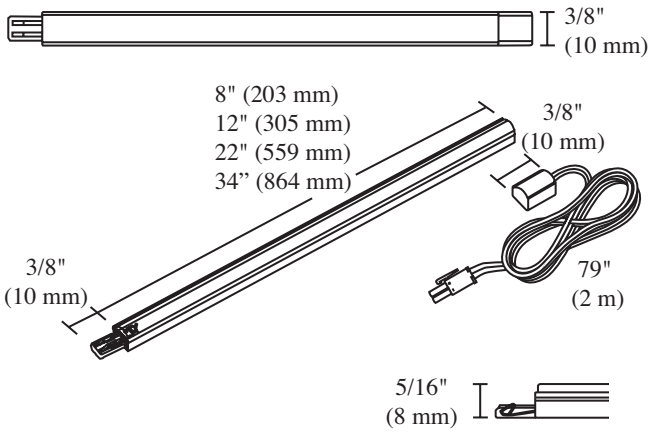

Specifications:

Wattage	Lumens	Efficacy (lm/W)	Input Voltage	Diode Life	Max Per 60W Power Supply	Max Continuous Run	Mounting	Warranty	Beam Angle
4.4W/ft. (14.4W/m)	330 per ft. (1082 per m)	75	12VDC	50,000 Hours	13' (4 m)	12' (3.66 m)	Surface	5 Year	120°

Photometric Data

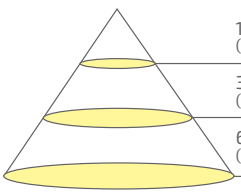

Height	Light Output	Beam Area
1ft (.3 m)	279Fc (3003.1lx)	3.4ft L x 3.6ft W (1 m L x 1.1 m W)
3ft (.9 m)	31.0Fc (333.6lx)	10.3ft L x 10.8ft W (3.1 m L x 3.3 m W)
6ft (1.8 m)	7.75Fc (83.4lx)	20.5ft L x 21.6ft W (6.2 m L x 6.6 m W)

L-STKH034-CNI-1 Tested

Color Temperature

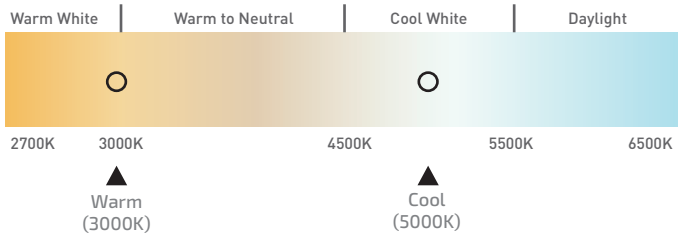

trescolighting.com | 1-800-227-1171 | cservice@trescolighting.com

REV-A-SHELF · tresco lighting

All product dimensions and specifications are subject to change without prior notice.

● Required
● Optional

● 12VDC FineLine 2.0 LED Series

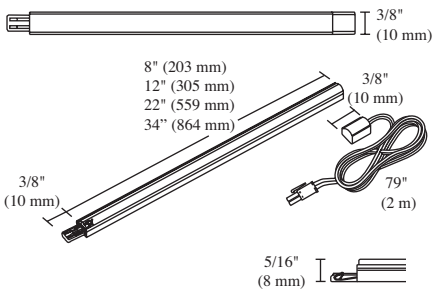

Part #	Description	SLP
L-STKH08-CNI-1	12VDC 4.4W/FT 8" (203 mm) 5000K FineLine 2.0, Nickel	$60.45
L-STKH012-CNI-1	12VDC 4.4W/FT 12" (305 mm) 5000K FineLine 2.0, Nickel	$73.45
L-STKH022-CNI-1	12VDC 4.4W/FT 22" (559 mm) 5000K FineLine 2.0, Nickel	$122.40
L-STKH034-CNI-1	12VDC 4.4W/FT 34" (864 mm) 5000K FineLine 2.0, Nickel	$160.95
L-STKH08-WNI-1	12VDC 4.4W/FT 8" (203 mm) 3000K FineLine 2.0, Nickel	$60.45
L-STKH012-WNI-1	12VDC 4.4W/FT 12" (305 mm) 3000K FineLine 2.0, Nickel	$73.45
L-STKH022-WNI-1	12VDC 4.4W/FT 22" (559 mm) 3000K FineLine 2.0, Nickel	$122.40
L-STKH034-WNI-1	12VDC 4.4W/FT 34" (864 mm) 3000K FineLine 2.0, Nickel	$160.95

Maximum continuous run of 12 ft. (3.7 m) to prevent voltage drop. Maximum 13 ft. (4 m) per 60W power supply. 79" (2 m) Starter Cord, AMP® Connector and mounting U-Clips are included with each light.

● 12VDC Power Supplies

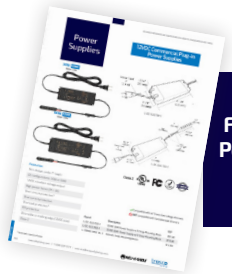

For details see Power Supplies on Page 384.

Part #	Description	SLP
L-DC-SLELT30-1	30W 12VDC Power Supply w/6 Snap Mounting Block*	$91.80
L-DC-SLELT60-1	60W 12VDC Power Supply w/6 Snap Mounting Block*	$118.90
L-DC-ELT6WP-CON-1	6W 12VDC Wall Mount Power Supply w/3 Snap Block*	$30.90
L-DC-ELT15WP-CON-1	15W 12VDC Wall Mount Power Supply w/6 Snap Block*	$40.30
L-DC-EQ30-1	30W 12VDC Equiline Power Supply w/6 Snap Block*	$62.80
L-DC-EQ60-1	60W 12VDC Equiline Power Supply w/6 Snap Block*	$84.35
L-DCE30D-CON-1	30W 12VDC Hardwire Dimmable LED Power Supply†	$119.50
L-DCE60D-CON-1	60W 12VDC Hardwire Dimmable LED Power Supply†	$194.00
L-12DCH60X1-1	60W 12VDC Commercial/Industrial Metal Hardwire Dimmable Power Supply§	$199.55
L-12DCH60X3-1	180W 12VDC Commercial/Industrial Metal Hardwire Dimmable Power Supply§	$416.30

* Dimmable on trailing edge (12VDC side). Mounting block and power cord are included.
† Dimmable by LED line voltage (120V) wall dimmers. Mounting block included.
§ Dimmable by LED line voltage (120V) wall dimmers. Mounting block not included
All hardwire power supplies require an electrician for install.

● 12VDC FineLine Link Cord

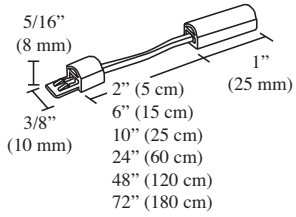

Part #	Description	SLP
L-LED-STKLNK-5-1	5 cm (2") 12VDC Stick Linking Cord	$4.35
L-LED-STKLNK-15-1	15 cm (6") 12VDC Stick Linking Cord	$5.35
L-LED-STKLNK-25-1	25 cm (10") 12VDC Stick Linking Cord	$5.65
L-LED-STKLNK-60-1	60 cm (24") 12VDC Stick Linking Cord	$6.80
L-LED-STKLNK-120-1	120 cm (48") 12VDC Stick Linking Cord	$8.70
L-LED-STKLNK-180-1	180 cm (72") 12VDC Stick Linking Cord	$10.00

COMPONENTS: POWER SUPPLIES, CONTROLLERS & MORE SEE PAGE 384.

12VDC

SimpLED 2.0

5W/ft. (16.4W/m)	470 Lumens per ft. (1541 per meter)	110°

The SimpLED 2.0 sets the bar for light output and simplicity. With the patented push-in "H" connection system and inline control modules, you get the simplest and quickest installation possible. Use either straight or pivoting mounting clips, then snap the fixtures into place to let over 470 lumens per foot illuminate your project.

US PATENT NO: 8,545,045

c UL us LISTED · CE · DIMMABLE · LUNIFORM · 5 YEAR WARRANTY

Available Finishes:

Aluminum (AL)

Dimensions:

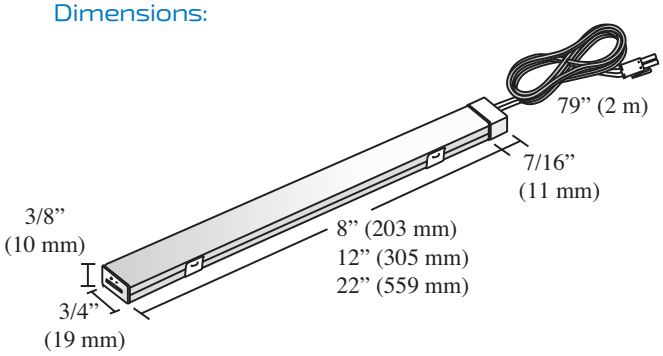

Specifications:

Wattage	Lumens	Efficacy (lm/W)	Input Voltage	Diode Life	Max Per 60W Power Supply	Max Continuous Run	Mounting	Warranty	Beam Angle
5W/ft. (16.4W/m)	470 per ft. (1541 per m)	94	12VDC	50,000 Hours	12' (3.7 m)	10' (3 m)	Surface	5 Year	110°

Photometric Data

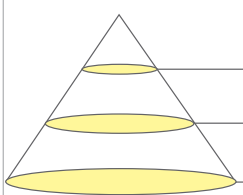

Height	Light Output	Beam Area
1ft (.3 m)	244.70Fc (2634lx)	2.7ft L x 2.8ft W (.82 m L x .85 m W)
3ft (.9 m)	27.19Fc (292.7lx)	8.2ft L x 8.3ft W (2.5 m L x 2.5 m W)
6ft (1.8 m)	6.80Fc (73.2lx)	16.4ft L x 16.5ft W (5 m L x 5 m W)

L-SMPH022-CNI-1 Tested

Color Temperature

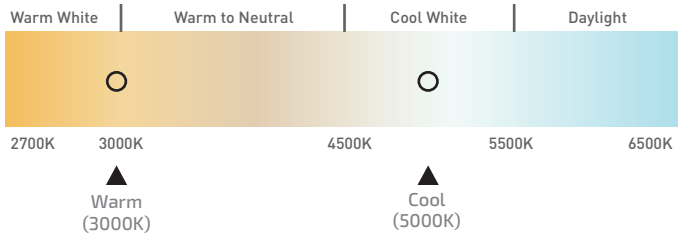

All product dimensions and specifications are subject to change without prior notice.

Required
Optional

12VDC SimpLED 2.0 Series

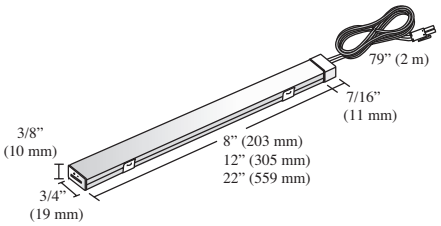

Part #	Description	SLP
L-SMPH08-CNI-1	8" (203 mm) 12VDC SimpLED 2.0, 5000K, Nickel	$68.10
L-SMPH012-CNI-1	12" (305 mm) 12VDC SimpLED 2.0, 5000K, Nickel	$92.40
L-SMPH022-CNI-1	22" (559 mm) 12VDC SimpLED 2.0, 5000K, Nickel	$175.20
L-SMPH08-WNI-1	8" (203 mm) 12VDC SimpLED 2.0, 3000K, Nickel	$68.10
L-SMPH012-WNI-1	12" (305 mm) 12VDC SimpLED 2.0, 3000K, Nickel	$92.40
L-SMPH022-WNI-1	22" (559 mm) 12VDC SimpLED 2.0, 3000K, Nickel	$175.20

Maximum continuous run 10 ft. (3 m) to prevent voltage drop. Maximum 12 ft. (3.6 m) per power supply.
79" (2 m) Starter Cord, AMP® Connector, H-Shaped Connector, and Mounting U-Clips are included with each light.
3 diffusers (Clear, Frosted and Milk/Opal) are included with each light.

12VDC Power Supplies

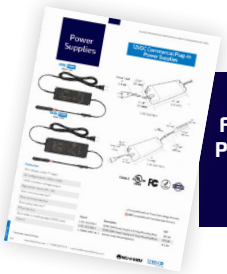

For details see Power Supplies on Page 384.

Part #	Description	SLP
L-DC-SLELT30-1	30W 12VDC Power Supply w/6 Snap Mounting Block*	$91.80
L-DC-SLELT60-1	60W 12VDC Power Supply w/6 Snap Mounting Block*	$118.90
L-DC-ELT6WP-CON-1	6W 12VDC Wall Mount Power Supply w/3 Snap Block*	$30.90
L-DC-ELT15WP-CON-1	15W 12VDC Wall Mount Power Supply w/6 Snap Block*	$40.30
L-DC-EQ30-1	30W 12VDC Equiline Power Supply w/6 Snap Block*	$62.80
L-DC-EQ60-1	60W 12VDC Equiline Power Supply w/6 Snap Block*	$84.35
L-DCE30D-CON-1	30W 12VDC Hardwire Dimmable LED Power Supply†	$119.50
L-DCE60D-CON-1	60W 12VDC Hardwire Dimmable LED Power Supply†	$194.00
L-12DCH60X1-1	60W 12VDC Commercial/Industrial Metal Hardwire Dimmable Power Supply§	$199.55
L-12DCH60X3-1	180W 12VDC Commercial/Industrial Metal Hardwire Dimmable Power Supply§	$416.30

* Dimmable on trailing edge (12VDC side). Mounting block and power cord are included.
† Dimmable by LED line voltage (120V) wall dimmers. Mounting block included.
§ Dimmable by LED line voltage (120V) wall dimmers. Mounting block not included.
All hardwire power supplies require an electrician for install.

12VDC SimpLED Link Cord

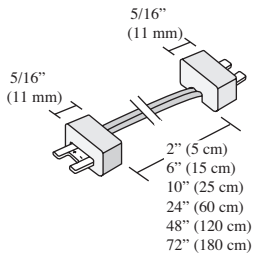

Part #	Description	SLP
L-LED-SMPLNK-5-1	5 cm (2") 12VDC SimpLED Linking Cord	$5.95
L-LED-SMPLNK-15-1	15 cm (6") 12VDC SimpLED Linking Cord	$6.25
L-LED-SMPLNK-25-1	25 cm (10") 12VDC SimpLED Linking Cord	$6.80
L-LED-SMPLNK-60-1	60 cm (24") 12VDC SimpLED Linking Cord	$7.85
L-LED-SMPLNK-120-1	120 cm (48") 12VDC SimpLED Linking Cord	$9.70
L-LED-SMPLNK-180-1	180 cm (72") 12VDC SimpLED Linking Cord	$11.60

12VDC SimpLED Control Modules

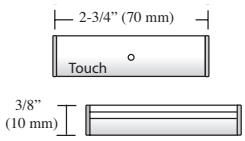

Part #	Description	SLP
L-LED-SMPTD4-1	27W Rectangle Inline Touch Dimmer	$53.35

Controls up to 5.4 ft. (1.6 m) of SimpLED 2.0 lights.

COMPONENTS: POWER SUPPLIES, CONTROLLERS & MORE SEE PAGE 384.

NEW! *Improved Design*

12VDC

Eurolinx 2.0

4W/ft. (13.1W/m)	216 Lumens per ft. (708 per meter)	120°

At 4W per foot and over 200 lumens, Eurolinx 2.0 is a top pick for sleek, high-end illumination. Using a specialized diffuser and reflector technology to achieve Luniform output, the flat profile blends in with any residential/commercial application. Newly re-designed components ensure tight and reliable connections, and included surface mounting u-clips make installation a breeze.

c UL us LISTED · CE · LUNIFORM · DIMMABLE · 5 YEAR WARRANTY

Available Finishes:

Aluminum (AL)

Dimensions:

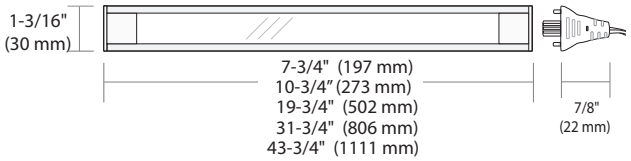

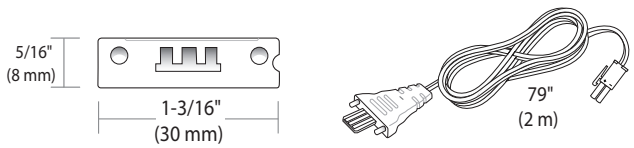

Specifications:

Wattage	Lumens	Efficacy (lm/W)	Input Voltage	Diode Life	Max Per 60W Power Supply	Max Continuous Run	Mounting	Warranty	Beam Angle
4W/ft. (13.1W/m)	216 per ft. (708 per m)	54	12VDC	50,000 Hours	15' (4.6 m)	10' (3 m)	Surface	5 Year	120°

Photometric Data

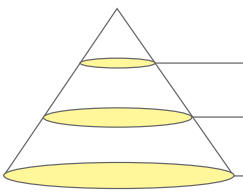

Height	Light Output	Beam Area
1ft (.3 m)	266.60Fc (2870lx)	2.9ft L x 3.3ft W (.88 m L x 1 m W)
3ft (.9 m)	29.62Fc (318.8lx)	8.8ft L x 10ft W (2.7 m L x 3 m W)
6ft (1.8 m)	7.40Fc (79.6lx)	17.6ft L x 20ft W (5.4 m L x 6 m W)

L-EUL15W-1111CAL-1 Tested

Color Temperature

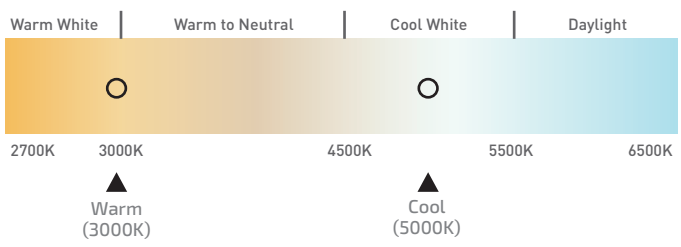

REV-A-SHELF · tresco lighting

All product dimensions and specifications are subject to change without prior notice.

● Required
● Optional

● 12VDC Eurolinx 2.0 Series

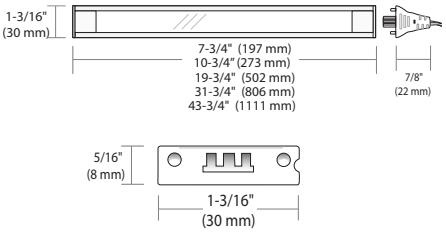

Part #	Description	SLP
L-EUL3W2-197CAL-1	197 mm (7-3/4") 12VDC 3W Eurolinx 2.0, 5000K	$85.10
L-EUL4W2-273CAL-1	273 mm (10-3/4") 12VDC 4W Eurolinx 2.0, 5000K	$90.30
L-EUL7W2-502CAL-1	502 mm (19-3/4") 12VDC 7W Eurolinx 2.0, 5000K	$120.85
L-EUL11W2-806CAL-1	806 mm (31-3/4") 12VDC 11W Eurolinx 2.0, 5000K	$150.80
L-EUL15W2-1111CAL-1	1111 mm (43-3/4") 12VDC 15W Eurolinx 2.0, 5000K	$180.60
L-EUL3W2-197WAL-1	197 mm (7-3/4") 12VDC 3W Eurolinx 2.0, 3000K	$85.10
L-EUL4W2-273WAL-1	273 mm (10-3/4") 12VDC 4W Eurolinx 2.0, 3000K	$90.30
L-EUL7W2-502WAL-1	502 mm (19-3/4") 12VDC 7W Eurolinx 2.0, 3000K	$120.85
L-EUL11W2-806WAL-1	806 mm (31-3/4") 12VDC 11W Eurolinx 2.0, 3000K	$150.80
L-EUL15W2-1111WAL-1	1111 mm (43-3/4") 12VDC 15W Eurolinx 2.0, 3000K	$180.60

Maximum continuous run 10 ft. (3 m) to prevent voltage drop. Maximum 15 ft. (4.6 m) per 60W power supply.
Each light includes 79" (2 m) starter cord, u-clips, and back-to-back connector.

● 12VDC Power Supplies

For details see Power Supplies on Page 384.

Part #	Description	SLP
L-DC-SLELT30-1	30W 12VDC Power Supply w/6 Snap Mounting Block*	$91.80
L-DC-SLELT60-1	60W 12VDC Power Supply w/6 Snap Mounting Block*	$118.90
L-DC-ELT6WP-CON-1	6W 12VDC Wall Mount Power Supply w/3 Snap Block*	$30.90
L-DC-ELT15WP-CON-1	15W 12VDC Wall Mount Power Supply w/6 Snap Block*	$40.30
L-DC-EQ30-1	30W 12VDC Equiline Power Supply w/6 Snap Block*	$62.80
L-DC-EQ60-1	60W 12VDC Equiline Power Supply w/6 Snap Block*	84.35
L-DCE30D-CON-1	30W 12VDC Hardwire Dimmable LED Power Supply†	$119.50
L-DCE60D-CON-1	60W 12VDC Hardwire Dimmable LED Power Supply†	$194.00
L-12DCH60X1-1	60W 12VDC Commercial/Industrial Metal Hardwire Dimmable Power Supply§	$199.55
L-12DCH60X3-1	180W 12VDC Commercial/Industrial Metal Hardwire Dimmable Power Supply§	$416.30

* Dimmable on trailing edge (12VDC side). Mounting block and power cord are included.
† Dimmable by LED line voltage (120V) wall dimmers. Mounting block included.
§ Dimmable by LED line voltage (120V) wall dimmers. Mounting block not included.
All hardwire power supplies require an electrician for install.

● 12VDC Eurolinx 2.0 Link Cord

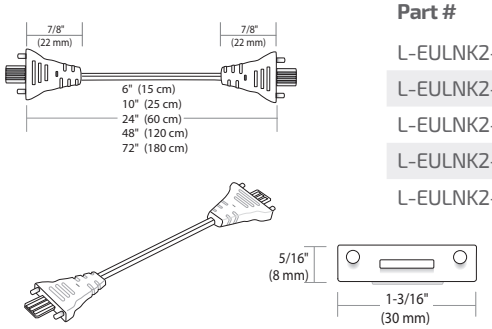

Part #	Description	SLP
L-EULNK2-15-WH-1	15 cm (6") Eurolinx 2.0 Linking Cord, White	$10.15
L-EULNK2-25-WH-1	25 cm (10") Eurolinx 2.0 Linking Cord, White	$11.90
L-EULNK2-60-WH-1	60 cm (24") Eurolinx 2.0 Linking Cord, White	$12.60
L-EULNK2-120-WH-1	120 cm (48") Eurolinx 2.0 Linking Cord, White	$14.95
L-EULNK2-180-WH-1	180 cm (72") Eurolinx 2.0 Linking Cord, White	$17.85

● 12VDC Eurolinx 2.0 Touch Dimmer

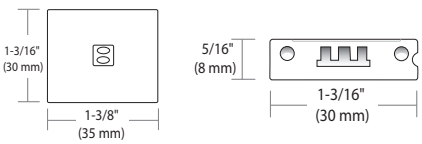

Part #	Description	SLP
L-EUL-GTD2-1	12VDC 27W Eurolinx 2.0 Gradual Inline Touch Dimmer	$25.50

Controls up to 6.75 ft. (2 m) of Eurolinx 2.0 Lights.
Max load 27W.

COMPONENTS: POWER SUPPLIES, CONTROLLERS & MORE SEE PAGE 384.

FlexTape® 1.5W

12VDC

1.5W/ft. (4.9W/m)	150 Lumens per ft. (492 per meter)	115°

Dimensions:

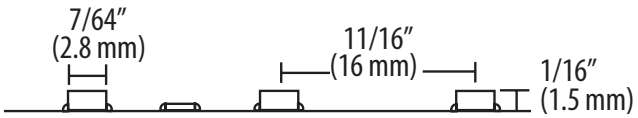

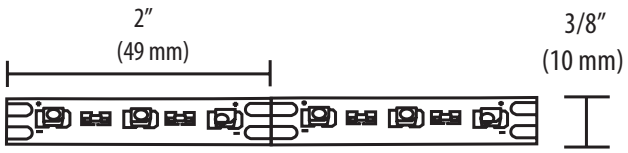

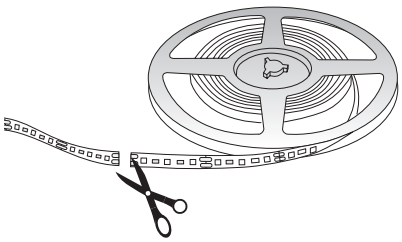

20' (6 m) roll length

Specifications:

Wattage	Lumens	Efficacy (lm/W)	Input Voltage	Diode Life	Max Per 60W Power Supply	Max Continuous Run	Mounting	Warranty	Beam Angle
1.5W/ft. (4.9W/m)	150 per ft. (492 per m)	100	12VDC	50,000 Hours	40' (12 m)	20' (6 m)	Surface	5 Year	115°

Photometric Data

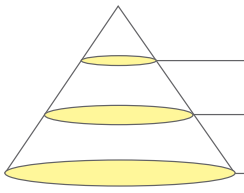

Height	Light Output	Beam Area
1ft (.3 m)	49.2Fc (529.6lx)	3.3ft L x 3.3ft W (1 m L x 1 m W)
3ft (.9 m)	5.47Fc (58.9lx)	9.8ft L x 10ft W (3 m L x 3 m W)
6ft (1.8 m)	1.37Fc (14.7lx)	19.5ft L x 20ft W (5.9 m L x 6.1 m W)

L-LED-FLXTPE-CROLL-1 Tested

Color Temperature

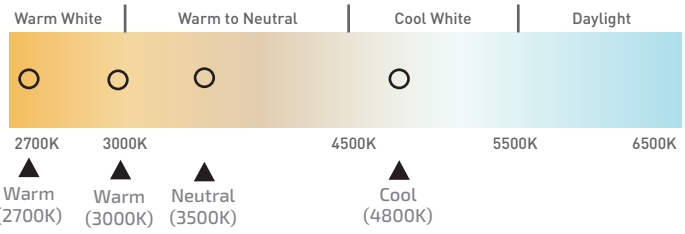

See page 366 for part numbers and descriptions

FlexTape® 3W

12VDC

3W/ft. (9.8W/m)	365 Lumens per ft. (1197 per meter)	115°

Cuttable every 1" (25 mm)

Dimensions:

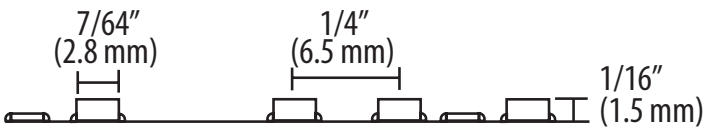

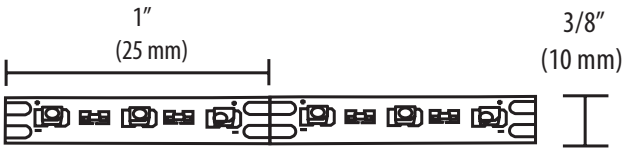

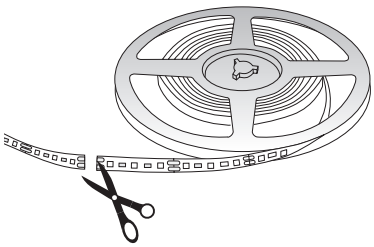

16.4' (5 m) roll length

c UL us LISTED · CE · DIMMABLE · CUTTABLE · 5 YEAR WARRANTY

Specifications:

Wattage	Lumens	Efficacy (lm/W)	Input Voltage	Diode Life	Max Per 60W Power Supply	Max Continuous Run	Mounting	Warranty	Beam Angle
3W/ft. (9.8W/m)	365 per ft. (1197 per m)	120	12VDC	50,000 Hours	20' (6 m)	16.4' (5 m)	Surface	5 Year	115°

Photometric Data

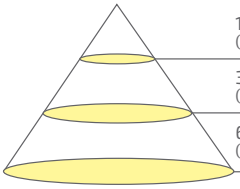

Height	Light Output	Beam Area
1ft (.3 m)	120Fc (1219.7lx)	3.4ft L x 3.3ft W (1.1 m L x 1 m W)
3ft (.9 m)	13.3Fc (143.2lx)	10.1ft L x 9.8ft W (3.1 m L x 3 m W)
6ft (1.8 m)	3.33Fc (35.8lx)	20.2ft L x 19.6ft W (6.2 m L x 6 m W)

L-LED-FLXTPE-CRHO-1 Tested

Color Temperature

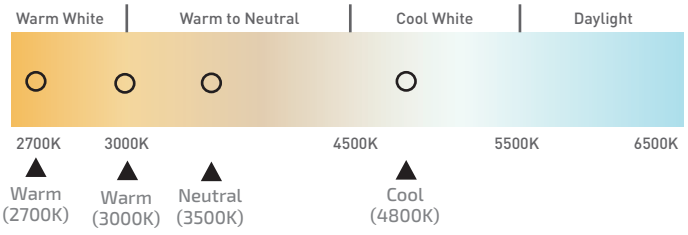

See page 366 for part numbers and descriptions

Economy Series

EquiLine Tape LED 1.5W

12VDC

1.5W/ft. (4.9W/m)	135 Lumens per ft. (443 per meter)	115°

Cuttable every 2" (49 mm)

Dimensions:

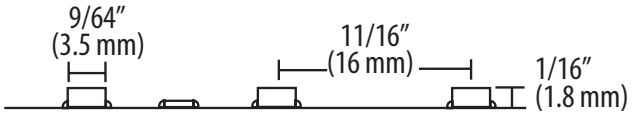

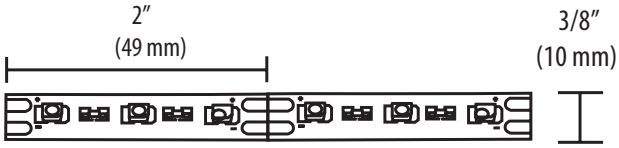

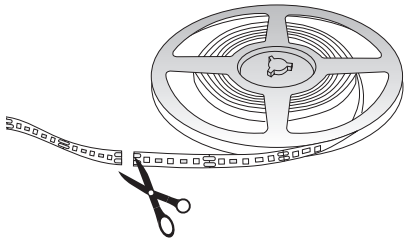

20' (6 m) roll length

c UL us LISTED · CUTTABLE · DIMMABLE

Specifications:

Wattage	Lumens	Efficacy (lm/W)	Input Voltage	Diode Life	Max Per 60W Power Supply	Max Continuous Run	Mounting	Warranty	Beam Angle
1.5W/ft. (4.9W/m)	135 per ft. (443 per m)	90	12VDC	25,000 Hours	40' (12 m)	20' (6 m)	Surface	2 Year	115°

Photometric Data

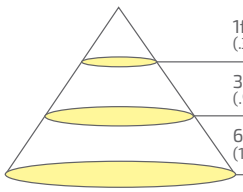

Height	Light Output	Beam Area
1ft (.3 m)	44.1Fc (474.6lx)	3.1ft L x 3.3ft W (.9 m L x 1 m W)
3ft (.9 m)	4.9Fc (52.7lx)	9.4ft L x 9.8ft W (2.9 m L x 3 m W)
6ft (1.8 m)	1.23Fc (13.3lx)	18.8ft L x 19.6ft W (5.7 m L x 6 m W)

L-TPELED-48SER-1 Tested

Color Temperature

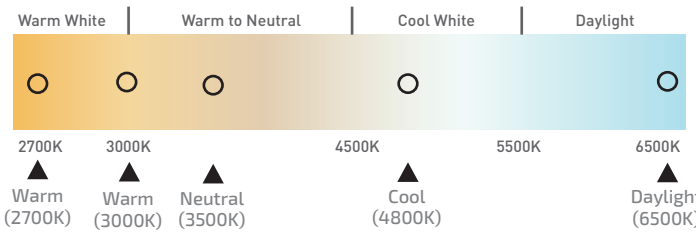

See page 366 for part numbers and descriptions

Economy Series

EquiLine Tape LED 3W

12VDC

3W/ft. (9.8W/m)	255 Lumens per ft. (836 per meter)	115°

Cuttable every 1" (25 mm)

Dimensions:

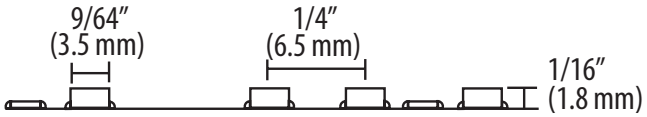

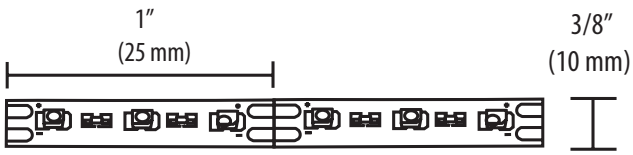

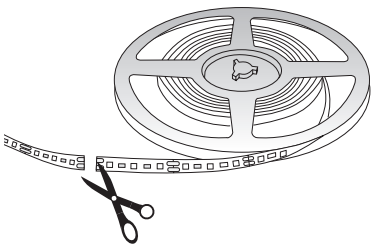

16.4' (5 m) roll length

c UL us LISTED · CUTTABLE · DIMMABLE

Specifications:

Wattage	Lumens	Efficacy (lm/W)	Input Voltage	Diode Life	Max Per 60W Power Supply	Max Continuous Run	Mounting	Warranty	Beam Angle
3W/ft. (9.8W/m)	255 per ft. (836 per m)	85	12VDC	25,000 Hours	20' (6 m)	16.4' (5 m)	Surface	2 Year	115°

Photometric Data

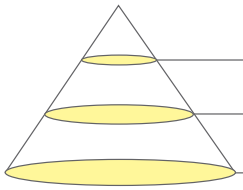

Height	Light Output	Beam Area
1ft (.3 m)	83.9Fc (903.1lx)	3.2ft L x 3.3ft W (1 m L x 1 m W)
3ft (.9 m)	9.32Fc (100.3lx)	9.5ft L x 9.9ft W (2.9 m L x 3 m W)
6ft (1.8 m)	2.33Fc (25.1lx)	19.1ft L x 19.9ft W (5.8 m L x 6.1 m W)

L-TPELED-48HER-1 Tested

Color Temperature

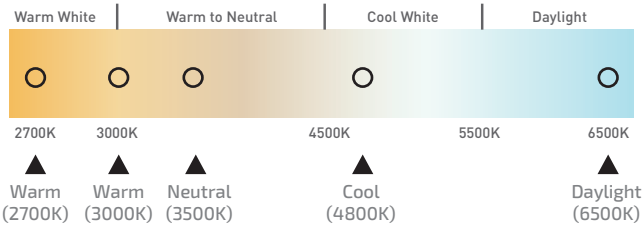

See page 366 for part numbers and descriptions

All product dimensions and specifications are subject to change without prior notice.

● Required
● Optional

● 12VDC FlexTape® 1.5W

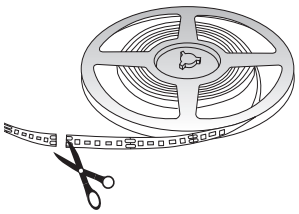

Part #	Description	SLP
L-LED-FLXTPE-WROLL-1	12VDC 1.5W 20' (6 m) 2700K FlexTape® Roll	$294.50
L-FLXTPE-30RS-1	12VDC 1.5W 20' (6 m) 3000K FlexTape® Roll	$294.50
L-LED-FLXTPE-NROLL-1	12VDC 1.5W 20' (6 m) 3500K FlexTape® Roll	$293.80
L-LED-FLXTPE-CROLL-1	12VDC 1.5W 20' (6 m) 4800K FlexTape® Roll	$294.50

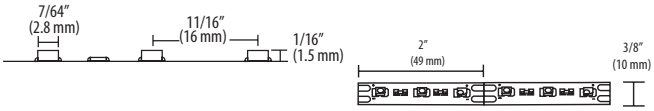

Maximum continuous run is 20' (6 m). Maximum per power supply is 40' (12 m). Mounts with adhesive backing. Cuttable every 2" (49 mm). To be used on clean, smooth surfaces. Pressure must be applied for proper 3M™ tape adhesion.

● 12VDC FlexTape® 3W

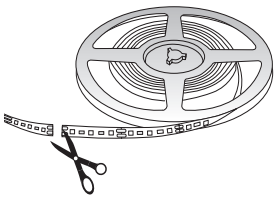

Part #	Description	SLP
L-LED-FLXTPE-WRHO-1	12VDC 3W 16.4' (5 m) 2700K High Output FlexTape® Roll	$313.90
L-FLXTPE-30RH-1	12VDC 3W 16.4' (5 m) 3000K High Output FlexTape® Roll	$334.65
L-LED-FLXTPE-NRHO-1	12VDC 3W 16.4' (5 m) 3500K High Output FlexTape® Roll	$313.90
L-LED-FLXTPE-CRHO-1	12VDC 3W 16.4' (5 m) 4800K High Output FlexTape® Roll	$334.65

Maximum continuous run is 16.4' (5 m). Maximum per power supply is 20' (6 m). Mounts with adhesive backing. Cuttable every 1" (25 mm). To be used on clean, smooth surfaces. Pressure must be applied for proper 3M™ tape adhesion.

● 12VDC EquiLine Tape LED 1.5W

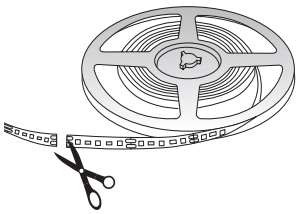

Part #	Description	SLP
L-TPELED-27SER-1	EquiLine 20' (6 m) Roll Tape LED 2700K	$220.25
L-TPELED-30SER-1	EquiLine 20' (6 m) Roll Tape LED 3000K	$209.80
L-TPELED-35SER-1	EquiLine 20' (6 m) Roll Tape LED 3500K	$209.80
L-TPELED-48SER-1	EquiLine 20' (6 m) Roll Tape LED 4800K	$209.80
L-TPELED-65SER-1	EquiLine 20' (6 m) Roll Tape LED 6500K	$209.80

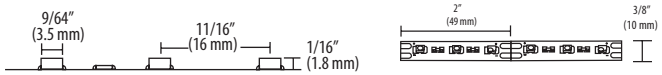

● 12VDC EquiLine Tape LED 3W

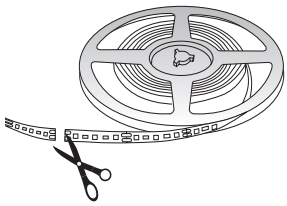

Part #	Description	SLP
L-TPELED-27HER-1	EquiLine 16.4' (5 m) Roll Tape LED 2700K	$220.25
L-TPELED-30HER-1	EquiLine 16.4' (5 m) Roll Tape LED 3000K	$220.25
L-TPELED-35HER-1	EquiLine 16.4' (5 m) Roll Tape LED 3500K	$220.25
L-TPELED-48HER-1	EquiLine 16.4' (5 m) Roll Tape LED 4800K	$220.25
L-TPELED-65HER-1	EquiLine 16.4' (5 m) Roll Tape LED 6500K	$220.25

Power Supplies

For details see Power Supplies on Page 384.

All product dimensions and specifications are subject to change without prior notice.

● Required
● Optional

● 12VDC Starter Cord for Single Color Tape

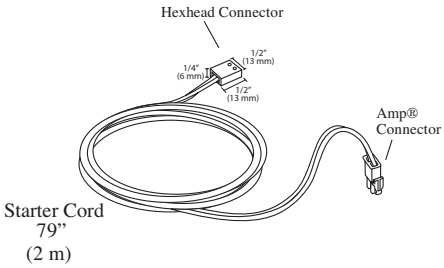

Part #	Description	SLP
L-LED-TPEPKT-2M-1	12VDC 2 m (79") FlexTape® Straight Starter Lead	$13.20
L-TPEPKT-2IN-1	12VDC 50 mm (2") FlexTape® Straight Starter Lead	$8.20

● 12VDC Tee Starter Cord for Single Color Tape

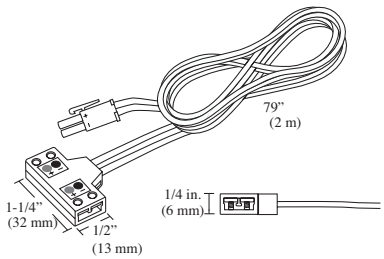

Part #	Description	SLP
L-LED-TPEPKT-2M-TEE-1	12VDC 2 m (79") FlexTape® Tee Starter Lead	$15.35

● 12/24VDC Tee Connector for Single Color Tape

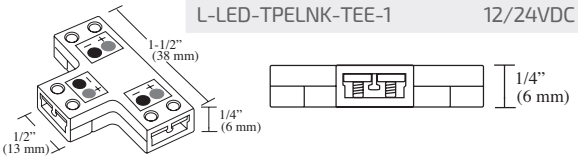

Part #	Description	SLP
L-LED-TPELNK-TEE-1	12/24VDC Tee Link Connector	$11.15

● 12/24VDC Right Angle Connector for Single Color Tape

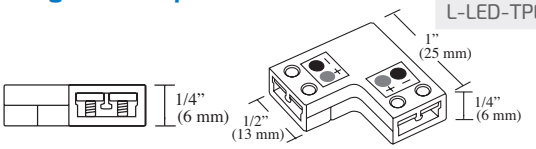

Part #	Description	SLP
L-LED-TPELNK-CON90-1	12/24VDC 90° Link Connector	$5.95

● 12/24VDC Link Cord for Single Color Tape

Positive and negative contacts on FlexTape® and FlexConnects should match-up to maintain proper polarity.

Part #	Description	SLP
L-LED-TPELNK-5-1	12/24VDC 5 cm (2") FlexTape® Link Cord	$6.55
L-LED-TPELNK-15-1	12/24VDC 15 cm (6") FlexTape® Link Cord	$7.35
L-LED-TPELNK-25-1	12/24VDC 25 cm (10") FlexTape® Link Cord	$7.80
L-LED-TPELNK-60-1	12/24VDC 60 cm (24") FlexTape® Link Cord	$8.25
L-LED-TPELNK-120-1	12/24VDC 120 cm (48") FlexTape® Link Cord	$9.90
L-LED-TPELNK-180-1	12/24VDC 180 cm (72") FlexTape® Link Cord	$11.35

● 12VDC Back-to-Back Connector for Single Color FlexTape®

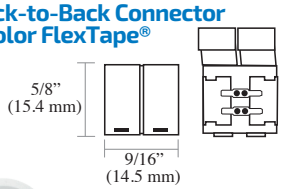

Part #	Description	SLP
L-TPELNK-BTB-1	12VDC Back-to-Back Connector	$2.90

To be used with non-COB single color tapes.

COMPONENTS: POWER SUPPLIES, CONTROLLERS & MORE SEE PAGE 384.

COB FlexTape®

12VDC

4.4W/ft. (14.5W/m)

245 Lumens per ft. (809 per meter)

115°

Chip on Board or "COB" FlexTape® is the latest advancement in tape lighting. With diodes directly mounted on a printed circuit board and a continuous fortified coating, this flexible, high density LED lighting strip creates our Luniform look without dark spots – no covers or filters needed!

c UL us LISTED | DIMMABLE | LUNIFORM | CUTTABLE | 5 YEAR WARRANTY

Cuttable every 11/16" (18 mm)

Dimensions:

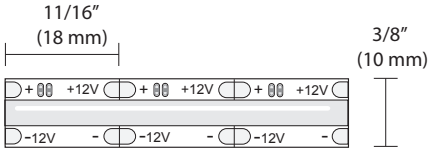

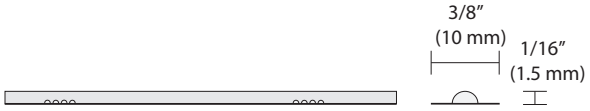

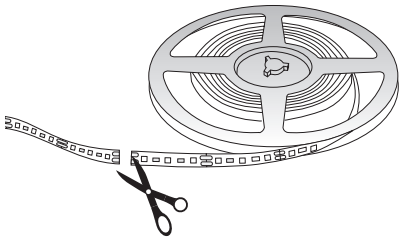

13' (4 m) roll length

Specifications:

Wattage	Lumens	Efficacy (lm/W)	Input Voltage	Diode Life	Max Per Power Supply 60W (12VDC)	Max Continuous Run	Mounting	Warranty	Beam Angle
4.4W/ft. (14.5W/m)	245 per ft. (809 per m)	55.7	12VDC	50,000 Hours	13' (4 m)	13' (4 m)	Surface	5 Year	115°

Photometric Data

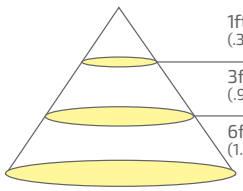

Height	Light Output	Beam Area
1ft (.3 m)	74.7Fc (804lx)	3.1ft L x 10.9ft W (.94 m L x 3.3 m W)
3ft (.9 m)	8.3Fc (89.3lx)	9.3ft L x 32.6ft W (2.8 m L x 9.9 mW)
6ft (1.8 m)	2.07Fc (22.3lx)	18.6ft L x 65.2ft W (5.7m L x 19.9 m W)

Color Temperature

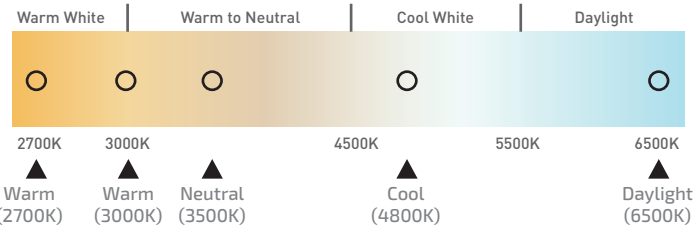

See page 370 for part numbers and descriptions

COB FlexTape®

24VDC

5.5W/ft. (18.1W/m)	420 Lumens per ft. (1386 per meter)	115°

Chip on Board or "COB" FlexTape® is the latest advancement in tape lighting. With diodes directly mounted on a printed circuit board and a continuous fortified coating, this flexible, high density LED lighting strip creates our Luniform look without dark spots – no covers or filters needed!

c UL us LISTED · DIMMABLE · LUNIFORM · CUTTABLE · 5 YEAR WARRANTY

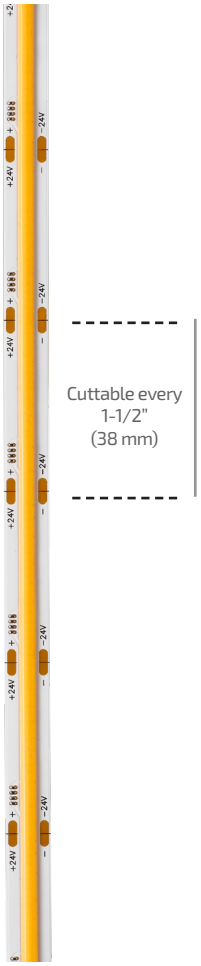

Dimensions:

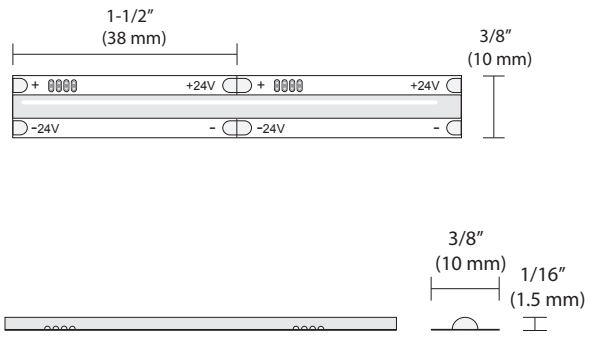

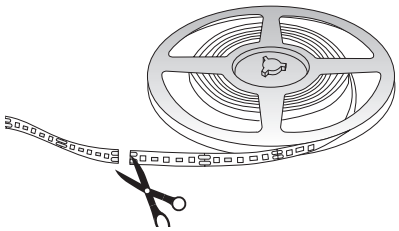

16.4' (4 m) roll length

Specifications:

Wattage	Lumens	Efficacy (lm/W)	Input Voltage	Diode Life	Max Per Power Supply 96W	Max Continuous Run	Mounting	Warranty	Beam Angle
5.5W/ft. (18.1W/m)	420 per ft (1386 per m)	76.4	24VDC	50,000 Hours	16.4' (5 m)	16.4' (5 m)	Surface	5 year	115°

Photometric Data

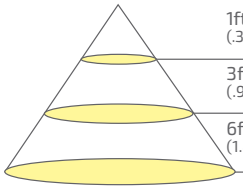

Height	Light Output	Beam Area
1ft (.3 m)	123Fc (1324lx)	3.1ft L x 8.5ft W (.94m L x 2.6m W)
3ft (.9 m)	13.6Fc (146.3lx)	9.3ft L x 32.6ft W (2.9m L x 7.8m W)
6ft (1.8 m)	3.41Fc (36.7lx)	18.7ft L x 51.2ft W (5.7m L x 15.6m W)

L-FLXCOB24-48RU-1 Tested

Color Temperature

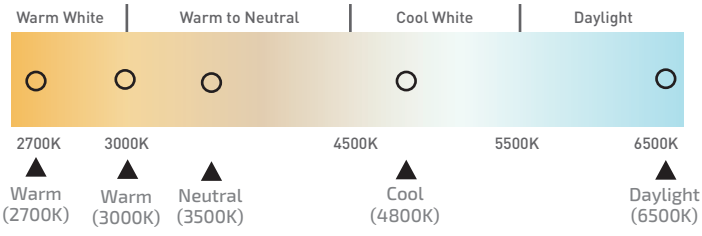

See page 371 for part numbers and descriptions

12VDC COB FlexTape®

All product dimensions and specifications are subject to change without prior notice.

Required
Optional

12VDC COB FlexTape® 4.4W

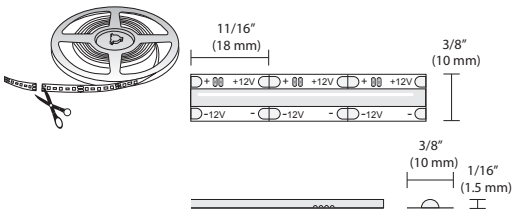

Part #	Description	SLP
L-FLXCOB12-27RV-1	12VDC 4.4W/FT 13' (4 m) 2700K COB FlexTape® Roll	$300.15
L-FLXCOB12-30RV-1	12VDC 4.4W/FT 13' (4 m) 3000K COB FlexTape® Roll	$300.15
L-FLXCOB12-35RV-1	12VDC 4.4W/FT 13' (4 m) 3500K COB FlexTape® Roll	$300.15
L-FLXCOB12-48RV-1	12VDC 4.4W/FT 13' (4 m) 4800K COB FlexTape® Roll	$300.15
L-FLXCOB12-65RV-1	12VDC 4.4W/FT 13' (4 m) 6500K COB FlexTape® Roll	$300.15

Maximum continuous run is 13' (4 m). Maximum per power supply is 13' (4 m). Mounts with adhesive backing. Cuttable every 11/16" (18 mm). To be used on clean, smooth surfaces. Pressure must be applied for proper 3M™ tape adhesion.

For details see Power Supplies on Page 384.

Part #	Description	SLP
L-DC-ELT18-CON-1	12VDC 18W Power Supply w/ 6 Snap Mounting Block*	
L-DC-SLELT30-1	12VDC 30W Power Supply w/ 6 Snap Mounting Block*	$91.80
L-DC-SLELT60-1	12VDC 60W Power Supply w/ 6 Snap Mounting Block*	$118.90
L-DC-ELT6WP-CON-1	12VDC 6W Wall Mount Power Supply w/3 Snap Block*	$30.90
L-DC-ELT15WP-CON-1	12VDC 15W Wall Mount Power Supply w/6 Snap Block*	$40.30
L-DC-EQ30-1	12VDC 30W EquiLine Power Supply w/6 Snap Block*	$62.80
L-DC-EQ60-1	12VDC 60W EquiLine Power Supply w/6 Snap Block*	$84.35
L-DCE30D-CON-1	12VDC 30W Hardwire Dimmable LED Power Supply†	$119.50
L-DCE60D-CON-1	12VDC 60W Hardwire Dimmable LED Power Supply†	$194.00
L-12DCH60X1-1	12VDC 60W Commercial/Industrial Metal Hardwire Dimmable Power Supply§	$199.55
L-12DCH60X3-1	12VDC 120W Commercial/Industrial Metal Hardwire Dimmable Power Supply§	$416.30

* Dimmable on trailing edge (12VDC side). Mounting block and power cord are included.
† Dimmable by LED line voltage (120V) wall dimmers. Mounting block included.
§ Dimmable by LED line voltage (120V) wall dimmers. Mounting block not included.
All hardwire power supplies require an electrician for install.

12VDC Starter Cord for Single Color Tape

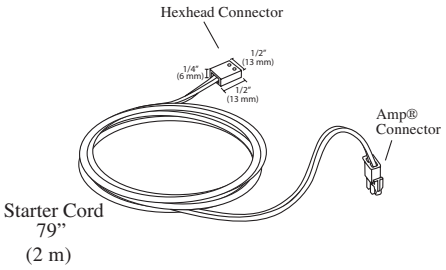

Part #	Description	SLP
L-LED-TPEPKT-2M-1	2 m (79") FlexTape® Straight Starter Leadt	$13.20
L-TPEPKT-2IN-1	50 mm (2") FlexTape® Straight Starter Lead	$8.20

12VDC COB FLEXTAPE® USES STANDARD FLEXTAPE® STARTER CORDS, LINK CORDS, TEE CONNECTOR AND 90-DEGREE CONNECTOR. SEE PAGE 367.

COMPONENTS: POWER SUPPLIES, CONTROLLERS & MORE SEE PAGE 384.

24VDC COB FlexTape®

All product dimensions and specifications are subject to change without prior notice.

● Required
● Optional

● 24VDC COB FlexTape® 5.5W

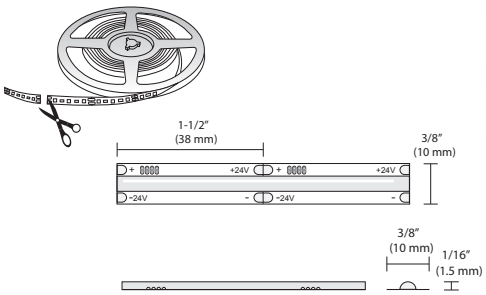

Part #	Description	SLP
L-FLXCOB24-27RU-1	24VDC 5.5W/FT 2700K COB FlexTape® 16.4' (5 m) Roll	$309.60
L-FLXCOB24-30RU-1	24VDC 5.5W/FT 3000K COB FlexTape® 16.4' (5 m) Roll	$309.60
L-FLXCOB24-35RU-1	24VDC 5.5W/FT 3500K COB FlexTape® 16.4' (5 m) Roll	$309.60
L-FLXCOB24-48RU-1	24VDC 5.5W/FT 4800K COB FlexTape® 16.4' (5 m) Roll	$309.60
L-FLXCOB24-65RU-1	24VDC 5.5W/FT 6500K COB FlexTape® 16.4' (5 m) Roll	$309.60

Maximum continuous run is 16.4' (5 m). Maximum per power supply is 16.4' (5 m). Mounts with adhesive backing. Cuttable every 1-1/2" (38 mm) . To be used on clean, smooth surfaces. Pressure must be applied for proper 3M™ tape adhesion. **MUST USE PROPER HEAT SINK (i.e. Infinex Aluminum Extrusions)**

● 24VDC Power Supplies

For details see Power Supplies on Page 384.

Part #	Description	SLP
L-24DCELT96-1	96W 24VDC Power Supply w/ 5 Barrel Out - White†	$185.15
L-24DCELT48-BL-1	48W 24VDC Power Supply w/ 5 Barrel Out - Black†	$166.15
L-24DCELT15WP-1	15W 24VDC Wall Mount Power Supply w/ Snap Connector*†	$63.65
L-24DCH96X1-1	96W 24VDC Dimmable Hardwire Power Supply*§	$325.35
L-24DCH96X3-1	288W 24VDC Dimmable Hardwire Power Supply*§	$573.35
L-24DCH96X4-120-277V-1	384W 24VDC Commercial Hardwire 0-10V Dimmable Power Supply	$590.09
L-1BRL5-1	Extra 5 Output Barrel Splice	$20.90

*Does not come with 5 Output Barrel Splice
†Dimmable on trailing edge (24VDC side)
§Dimmable by LED line voltage (120V) wall dimmers

● 24VDC Starter Cord for COB

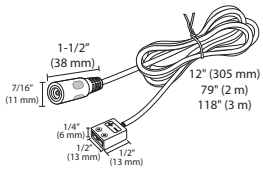

Part #	Description	SLP
L-24B2SPKT-305MM-1	305 mm (12") 24VDC FlexTape® Barrel/2 Screw Trml Starter Lead, White	$14.50
L-24B2SPKT-2M-1	2 m (79") 24VDC FlexTape® Barrel/2 Screw Trml Starter Lead, White	$14.35
L-24B2SPKT-3M-1	3 m (118") 24VDC FlexTape® Barrel/2 Screw Trml Starter Lead, White	$27.60

● 12/24VDC Back-to-Back Connector for COB

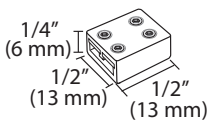

Part #	Description	SLP
L-XSBTB-1	12/24VDC 10 mm, 2 Position Back-to-Back Connector, Clear	$3.90

Side-Emitting Neoloop

12VDC
24VDC

Side-Emitting: flat illuminated side bendable on the horizontal axis

3W/ft. (9.8W/m)	100 Lumens per ft. (328 per meter)	110°

Bold lighting for bright applications, achieve consistent, seamless illumination from start to finish with Neoloop, flexible silicone LED lighting. Shatterproof and watertight, side-emitting Neoloop illuminates from the side and bends on a horizontal axis, a perfect solution for adding light to dark millwork, creating unique wall designs, outlining commercial logos and more.

c UL us LISTED | DIMMABLE | LUNIFORM | 5 YEAR WARRANTY | CUTTABLE | CLOSET LISTED | IP65

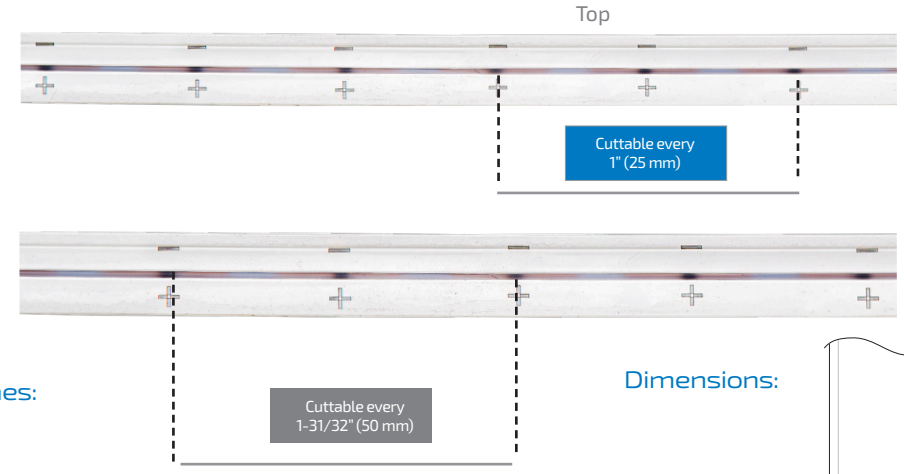

Available Finishes:

White (WH)

Dimensions:

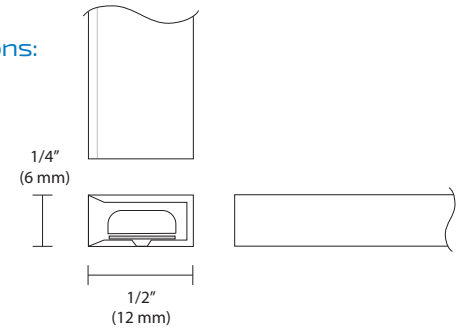

Specifications:

Wattage	Lumens	Efficacy (lm/W)	Input Voltage	Diode Life	CRI	Bend Diameter	Bend Axis	Max Per 60W / Max Per 96W / Power Supply	Mounting	Warranty	Beam Angle
3W/ft (9.8W/m)	100 per ft. (328 per m)	33.3	12VDC / 24VDC	50,000 Hours	>90	4" (100 mm)	Horizontal	20' (7.3 m) / 26.25' (8 m)	Recess/ Surface	5 Year	110°

Photometric Data

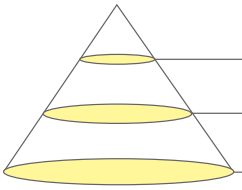

Height	Light Output	Beam Area
1ft (.3 m)	34.0Fc (366lx)	3ft L x 2.9ft W (.9 m L x .9 m W)
3ft (.9 m)	3.78Fc (40.7lx)	8.9ft L x 8.6ft W (2.7 m L x 2.6 m W)
6ft (1.8 m)	0.95Fc (10.2lx)	17.9ft L x 17.1ft W (5.5 m L x 5.2 m W)

L-N1-12V3WM-48K-5M-1 / L-N1-24V3WM-48K-8M-1 Tested

Color Temperature

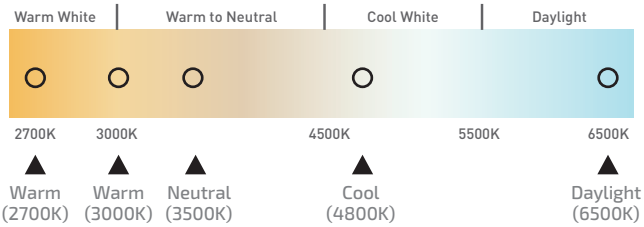

See page 374 for part numbers and descriptions

REV-A-SHELF tresco lighting

Top-Emitting Neoloop

12VDC
24VDC

3W/ft. (9.8W/m)

200 Lumens per ft. (656 per meter)

145°

Bold lighting for bright applications, achieve consistent, seamless illumination from start to finish with Neoloop, flexible silicone LED lighting. Shatterproof and watertight, top-emitting Neoloop illuminates from a curved top and bends on a vertical axis, ideal for architectural accents such as under countertops, soffits or toe kick lighting.

c UL us LISTED · DIMMABLE · LUNIFORM · 5 YEAR WARRANTY · CUTTABLE · CLOSET LISTED · IP65

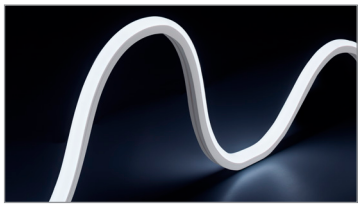

Top-Emitting: curved illuminated top bendable on the vertical axis

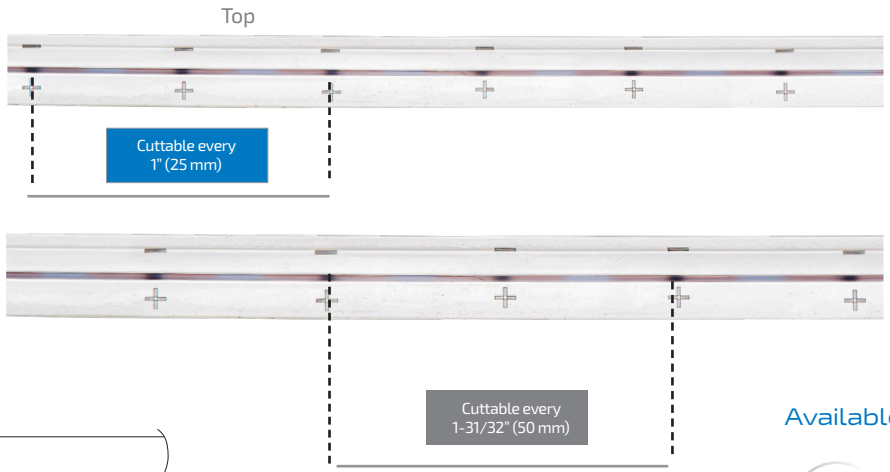

Dimensions:

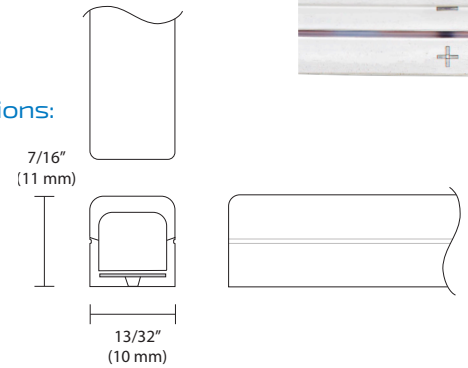

Available Finishes:

White (WH)

Specifications:

Wattage	Lumens	Efficacy (lm/W)	Input Voltage	Diode Life	CRI	Bend Diameter	Bend Axis	Max Per 60W / Max Per 96W / Power Supply	Mounting	Warranty	Beam Angle
3W/ft (9.8W/m)	200 per ft. (656 per m)	66.7	12VDC 24VDC	50,000 Hours	>90	4" (100 mm)	Vertical	20' (7.3 m) 26.25' (8 m)	Recess/ Surface	5 Year	145°

Photometric Data

	Height	Light Output	Beam Area
	1ft (.3 m)	43.2Fc (465lx)	4.1ft L x 2.8ft W (1.2 m L x .85 m W)
	3ft (.9 m)	4.8Fc (51.6lx)	12.3ft L x 8.3ft W (3.7 m L x 2.5 m W)
	6ft (1.8 m)	1.2Fc (12.9lx)	24.6ft L x 16.7ft W (7.5 m L x 5.1 m W)

L-N2-12V3WM-48K-5M-1 / L-N2-24V3WM-48K-8M-1 Tested

Color Temperature

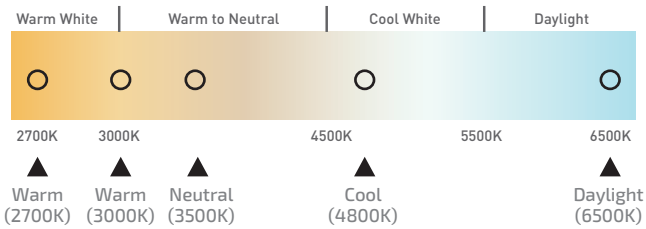

See page 374 for part numbers and descriptions

All product dimensions and specifications are subject to change without prior notice.

● Required
● Optional

● 12VDC Side-Emitting Neoloop

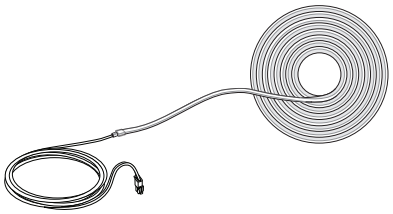

Part #	Description	SLP
L-N1-12V3WM-27K-5M-1	12VDC 3W/FT 5 m (16.4') 2700K N1 Side w/ 2 Molded Inputs	$316.40
L-N1-12V3WM-30K-5M-1	12VDC 3W/FT 5 m (16.4') 3000K N1 Side w/ 2 Molded Inputs	$316.40
L-N1-12V3WM-35K-5M-1	12VDC 3W/FT 5 m (16.4') 3500K N1 Side w/ 2 Molded Inputs	$316.40
L-N1-12V3WM-48K-5M-1	12VDC 3W/FT 5 m (16.4') 4800K N1 Side w/ 2 Molded Inputs	$316.40
L-N1-12V3WM-65K-5M-1	12VDC 3W/FT 5 m (16.4') 6500K N1 Side w/ 2 Molded Inputs	$316.40

● 12VDC Top-Emitting Neoloop

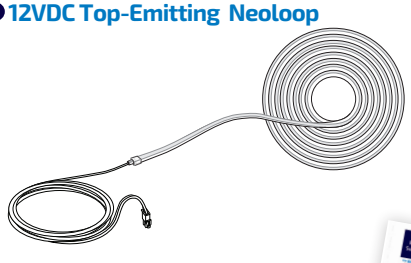

Part #	Description	SLP
L-N2-12V3WM-27K-5M-1	12VDC 3W/FT 5 m (16.4') 2700K N2 Top w/ 2 Molded Inputs	$338.30
L-N2-12V3WM-30K-5M-1	12VDC 3W/FT 5 m (16.4') 3000K N2 Top w/ 2 Molded Inputs	$338.30
L-N2-12V3WM-35K-5M-1	12VDC 3W/FT 5 m (16.4') 3500K N2 Top w/ 2 Molded Inputs	$338.30
L-N2-12V3WM-48K-5M-1	12VDC 3W/FT 5 m (16.4') 4800K N2 Top w/ 2 Molded Inputs	$338.30
L-N2-12V3WM-65K-5M-1	12VDC 3W/FT 5 m (16.4') 6500K N2 Top w/ 2 Molded Inputs	$338.30

● 12VDC Power Supplies

For details see Power Supplies on Page 384.

● 12VDC DIY Neoloop Starter Cords

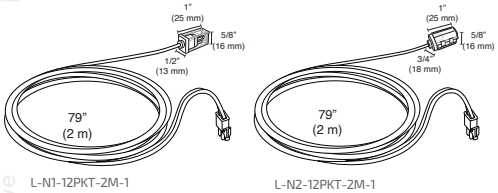

Part #	Description	SLP
L-N1-12PKT-2M-1	12VDC 2 m (79") Neoloop DIY Starter Lead, Side-Emitting	$21.55
L-N2-12PKT-2M-1	12VDC 2 m (79") Neoloop DIY Starter Lead, Top-Emitting	$21.10

● 12VDC Starter Cord Extension Leads

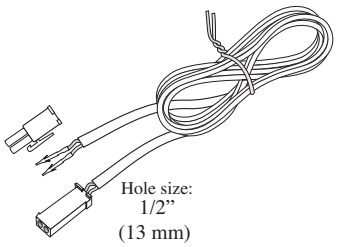

Part #	Description	SLP
L-LED-LINKD-8-1	8 cm (3") 12VDC Starter/Link/Extension Cord	$4.00
L-LED-LINKD-15-1	15 cm (6") 12VDC Starter/Link/Extension Cord	$4.65
L-LED-LINKD-25-1	25 cm (10") 12VDC Starter/Link/Extension Cord	$7.00
L-LED-LINKD-60-1	60 cm (24") 12VDC Starter/Link/Extension Cord	$7.50
L-LED-LINKD-120-1	120 cm (48") 12VDC Starter/Link/Extension Cord	$10.40
L-LED-LINKD-180-1	180 cm (72") 12VDC Starter/Link/Extension Cord	$12.10
L-LED-LINKD-245-1	245 cm (96") 12VDC Starter/Link/Extension Cord	$14.35

● 24VDC Side-Emitting Neoloop

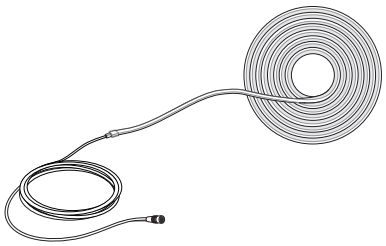

Part #	Description	SLP
L-N1-24V3WM-27K-8M-1	24VDC 3W/FT 8 m (26.25') 2700K N1 Side w/ 2 Molded Inputs	$477.40
L-N1-24V3WM-30K-8M-1	24VDC 3W/FT 8 m (26.25') 3000K N1 Side w/ 2 Molded Inputs	$477.40
L-N1-24V3WM-35K-8M-1	24VDC 3W/FT 8 m (26.25') 3500K N1 Side w/ 2 Molded Inputs	$477.40
L-N1-24V3WM-48K-8M-1	24VDC 3W/FT 8 m (26.25') 4800K N1 Side w/ 2 Molded Inputs	$477.40
L-N1-24V3WM-65K-8M-1	24VDC 3W/FT 8 m (26.25') 6500K N1 Side w/ 2 Molded Inputs	$477.40

● 24VDC Top-Emitting Neoloop

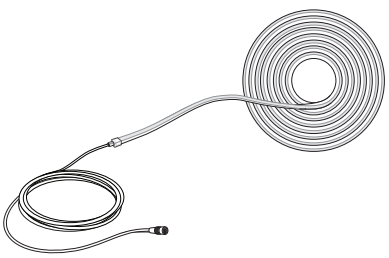

Part #	Description	SLP
L-N2-24V3WM-27K-8M-1	24VDC 3W/FT 8 m (26.25') 2700K N2 Top w/ 2 Molded Inputs	$497.25
L-N2-24V3WM-30K-8M-1	24VDC 3W/FT 8 m (26.25') 3000K N2 Top w/ 2 Molded Inputs	$497.25
L-N2-24V3WM-35K-8M-1	24VDC 3W/FT 8 m (26.25') 3500K N2 Top w/ 2 Molded Inputs	$497.25
L-N2-24V3WM-48K-8M-1	24VDC 3W/FT 8 m (26.25') 4800K N2 Top w/ 2 Molded Inputs	$497.25
L-N2-24V3WM-65K-8M-1	24VDC 3W/FT 8 m (26.25') 6500K N2 Top w/ 2 Molded Inputs	$497.25

24VDC Power Supplies

For details see Power Supplies on Page 384.

24VDC DIY Neoloop Starter Cords

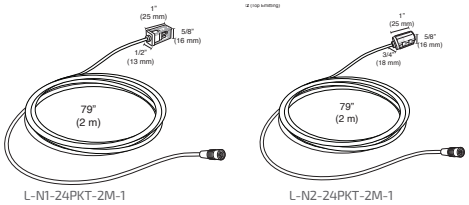

L-N1-24PKT-2M-1 L-N2-24PKT-2M-1

Part #	Description	SLP
L-N1-24PKT-2M-1	24VDC 2 m (79") Neoloop DIY Starter Lead, Side-Emitting	$18.80
L-N2-24PKT-2M-1	24VDC 2 m (79") Neoloop DIY Starter Lead, Top-Emitting	$26.10

24VDC Starter Cord Extension Leads

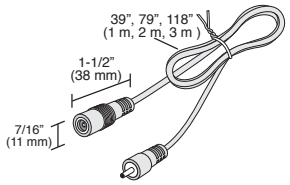

Part #	Description	SLP
L-24BBEXT-1M-1	1 m (39") 24VDC ML/FML Barrel Extension, White	$5.15
L-24BBEXT-2M-1	2 m (79") 24VDC ML/FML Barrel Extension, White	$8.90
L-24BBEXT-3M-1	3 m (119") 24VDC ML/FML Barrel Extension, White	$11.65

12/24VDC DIY Neoloop Link Cords

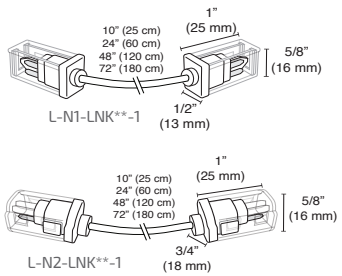

Part #	Description	SLP
L-N1-LNK25-1	12/24VDC 25 cm (10") Neoloop DIY Link Cord, Side-Emitting	$27.55
L-N1-LNK60-1	12/24VDC 60 cm (24") Neoloop DIY Link Cord, Side-Emitting	$28.25
L-N1-LNK120-1	12/24VDC 120 cm (48") Neoloop DIY Link Cord, Side-Emitting	$30.00
L-N1-LNK180-1	12/24VDC 180 cm (72") Neoloop DIY Link Cord, Side-Emitting	$31.90
L-N2-LNK25-1	12/24VDC 25 cm (10") Neoloop DIY Link Cord, Top-Emitting	$26.80
L-N2-LNK60-1	12/24VDC 60 cm (24") Neoloop DIY Link Cord, Top-Emitting	$27.45
L-N2-LNK120-1	12/24VDC 120 cm (48") Neoloop DIY Link Cord, Top-Emitting	$30.05
L-N2-LNK180-1	12/24VDC 180 cm (72") Neoloop DIY Link Cord, Top-Emitting	$32.00

12/24VDC DIY Neoloop Back-to-Back Connector

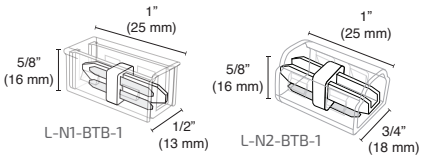

Part #	Description	SLP
L-N1-BTB-1	12/24VDC Neoloop DIY Back-to-Back Connector, Side-Emitting	$10.60
L-N2-BTB-1	12/24VDC Neoloop DIY Back-to-Back Connector, Top-Emitting	$14.60

12/24VDC DIY Neoloop End Caps

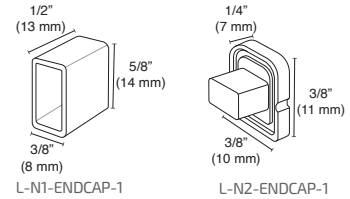

Part #	Description	SLP
L-N1-ENDCAP-1	12/24VDC Neoloop DIY End Cap, Side-Emitting	$0.75
L-N2-ENDCAP-1	12/24VDC Neoloop DIY End Cap, Top-Emitting	$1.30

12/24VDC Neoloop U-Clips

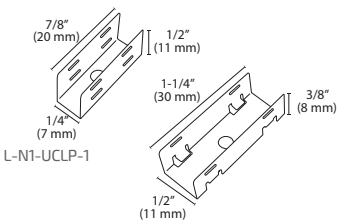

Part #	Description	SLP
L-N1-UCLP-1	12/24VDC Neoloop DIY U-Clip Mount, Side-Emitting (10 pcs)	$12.30
L-N2-UCLP-1	12/24VDC Neoloop DIY U-Clip Mount, Top-Emitting (10 pcs)	$15.10

COMPONENTS: POWER SUPPLIES, CONTROLLERS & MORE SEE PAGE 384.

Snip

24VDC

Standard: Full Sheet: 12W 8W/ft² High: Full Sheet: 22.5W 15W/ft²	Standard: Full Sheet: 1148 Lumens 765 lm/ft² High: Full Sheet: 2067 Lumens 1378 lm/ft²	120°

Paper-thin illumination, Snip panels have the flexibility to conform to curved surfaces and wrap around objects for continuous even illumination. Sold in 24" x 9" (610 mm x 229 mm) panels, the extremely lightweight LED sheets can be snipped into 3" x 3" (76 mm x 76 mm) squares and re-connected into any custom configuration; a versatile lighting solution for unique applications.

c UL us LISTED | c UL us Listed in SAM Manual | DIMMABLE | CUTTABLE | COMMERCIAL GRADE 5 YEAR WARRANTY

Dimensions:

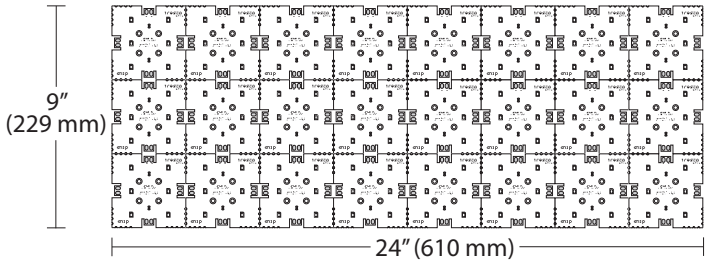

Specifications:

	Wattage	Lumens	Efficacy (lm/W)	Input Voltage	Diode Life	CRI	Max Per 96W Power Supply	Mounting	Warranty	Beam Angle
Standard	Full Sheet: 12W 8W/ft² (.5W per 3" square)	Full Sheet: 1148 765/ft²	95.7	24VDC	50,000 Hours	>93	12ft²	Surface	5 Year	120°
High	Full Sheet: 22.5W 15W/ft² (.94W per 3" square)	Full Sheet: 2067 1378/ft²	91.9			>93	6.4ft²			

Photometric Data

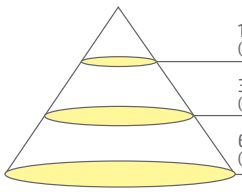

Height	Light Output Standard/High	Beam Area
1ft (.3 m)	381Fc / 686Fc (4102lx) / (7384lx)	3.3ft L x 3.2ft W (1 m L x .91 m W)
3ft (.9 m)	42.3Fc / 76.2Fc (455.3lx) / (820.2lx)	10ft L x 9.6ft W (3 m L x 3 m W)
6ft (1.8 m)	10.6Fc / 19.1Fc (114.1lx) / (205.6lx)	20ft L x 19.2ft W (6.2 m L x 6 m W)

L-SPFL8WA-50K-1 / L-SPFL15WA-50K-1 Tested

Color Temperature

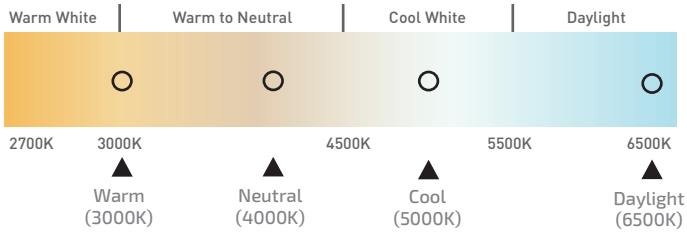

See page 378 for part numbers and descriptions

Snap

24VDC

Standard:	Standard:	
High: 15W/ft²	900 Lumens High: 1670 Lumens	120°

Customized lighting solutions are just a "snap" away with the Snap Panels. Sold in 12" x 12" (305 mm x 305 mm) squares, the razor-thin panels can be snapped down to 3" x 3" (76 mm x 76 mm) squares and connected back into any configuration, creating the perfect solution with complete light uniformity.

c UL us LISTED

c UL us Listed in SAM Manual

DIMMABLE

5 YEAR WARRANTY

Dimensions:

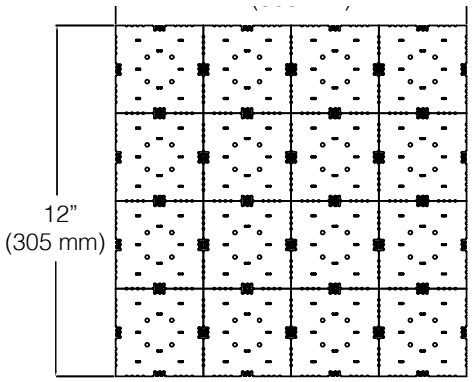

Specifications:

	Wattage	Lumens	Efficacy (lm/W)	Input Voltage	Diode Life	Max Per 96W Power Supply	Mounting	Warranty	Beam Angle
Standard	8W/ft² (.5W per 3" square)	900	112	24VDC	50,000 Hours	12ft²	Surface	5 Year	120°
High	15w/ft² (.94W per 3" square)	1670	111			6.4ft²			

Photometric Data

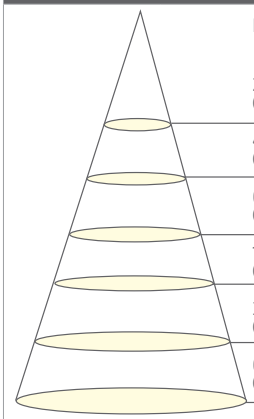

Height	Standard	High
2 in (5 cm)	10,202Fc (109,813lx)	18,995Fc (204,460lx)
4 in (10 cm)	2,708Fc (29,148lx)	5,401Fc (54,260lx)
6in (15 cm)	1179Fc (12,690lx)	2,196Fc (23,637lx)
1 ft (.3 m)	295Fc (3,175lx)	549Fc (5,909lx)
3 ft (.9 m)	33Fc (353lx)	61Fc (656lx)
6 ft (1.8 m)	8Fc (88lx)	15Fc (163lx)

Color Temperature

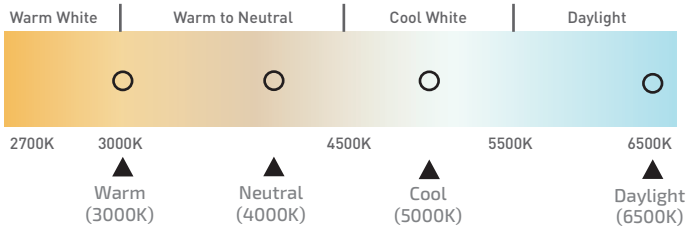

See page 379 for part numbers and descriptions

Snip

24VDC Snip Light Panel

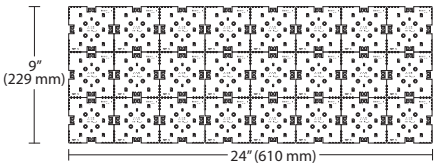

Part #	Description	SLP
L-SPFL8WA-30K-1	24VDC 8W/SQFT 1.5SQFT 3000K Snip Panel	$149.30
L-SPFL8WA-40K-1	24VDC 8W/SQFT 1.5SQFT 4000K Snip Panel	$149.30
L-SPFL8WA-50K-1	24VDC 8W/SQFT 1.5SQFT 5000K Snip Panel	$149.30
L-SPFL8WA-65K-1	24VDC 8W/SQFT 1.5SQFT 6500K Snip Panel	$149.30
L-SPFL15WA-30K-1	24VDC 15W/SQFT 1.5SQFT 3000K Snip Panel	$149.30
L-SPFL15WA-40K-1	24VDC 15W/SQFT 1.5SQFT 4000K Snip Panel	$149.30
L-SPFL15WA-50K-1	24VDC 15W/SQFT 1.5SQFT 5000K Snip Panel	$149.30
L-SPFL15WA-65K-1	24VDC 15W/SQFT 1.5SQFT 6500K Snip Panel	$149.30

24VDC Snip Starter Cord

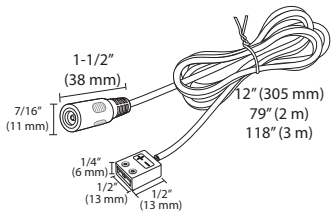

Part #	Description	SLP
L-24B2SPKT-305MM-1	24VDC 305 mm (12") Barrel/2 Screw Trml Starter Lead, White	$14.50
L-24B2SPKT-2M-1	24VDC 2 m (79") Barrel/2 Screw Trml Starter Lead, White	$14.35
L-24B2SPKT-3M-1	24VDC 3 m (118") Barrel/2 Screw Trml Starter Lead, White	$27.60

24VDC Power Supplies

For details see Power Supplies on Page 384.

Part #	Description	SLP
L-24DCELT96-1	96W 24VDC Power Supply w/ 5 Barrel Out - White†	$185.15
L-24DCELT48-BL-1	48W 24VDC Power Supply w/ 5 Barrel Out - Black†	$166.15
L-24DCELT15WP-1	15W 24VDC Wall Mount Power Supply w/ Snap Connector*†	$63.65
L-24DCH96X1-1	96W 24VDC Dimmable Hardwire Power Supply*§	$325.35
L-24DCH96X3-1	288W 24VDC Dimmable Hardwire Power Supply*§	$573.35
L-24DCH96X4-120-277V-1	384W 24VDC Commercial Hardwire 0-10V Dimmable Power Supply	$590.09
L-1BRL5-1	Extra 5 Output Barrel Splice	$20.90

*Does not come with 5 Output Barrel Splice
†Dimmable on trailing edge (24VDC side)
§Dimmable by LED line voltage (120V) wall dimmers

All product dimensions and specifications are subject to change without prior notice.

● Required
● Optional

● 24VDC Snap Light Panel

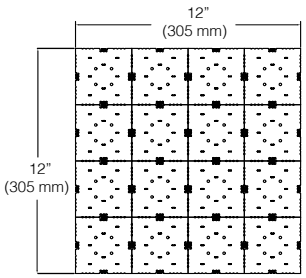

Part #	Description	SLP
L-SP8WA-30K-1	24VDC 8W 12" (305 mm) Square Snap Panel 3000K	$141.25
L-SP8WA-40K-1	24VDC 8W 12" (305 mm) Square Snap Panel 4000K	$141.25
L-SP8WA-50K-1	24VDC 8W 12" (305 mm) Square Snap Panel 5000K	$141.25
L-SP8WA-65K-1	24VDC 8W 12" (305 mm) Square Snap Panel 6500K	$141.25
L-SP15WA-30K-1	24VDC 15W 12" (305 mm) Square Snap Panel 3000K	$131.60
L-SP15WA-40K-1	24VDC 15W 12" (305 mm) Square Snap Panel 4000K	$131.60
L-SP15WA-50K-1	24VDC 15W 12" (305 mm) Square Snap Panel 5000K	$131.60
L-SP15WA-65K-1	24VDC 15W 12" (305 mm) Square Snap Panel 6500K	$131.60

Mounting clips and screws included. Starter cords sold separately.

● 24VDC Snap Starter Cord

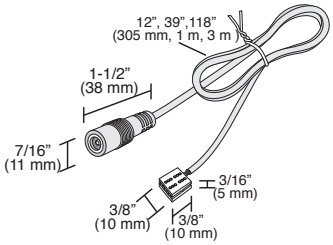

Part #	Description	SLP
L-SPPKT-305MM-1	305 mm (12") Snap Panel Starter Lead	$6.55
L-SPPKT-1M-1	1 m (39") Snap Panel Starter Lead	$9.40
L-SPPKT-3M-1	3 m (118") Snap Panel Starter Lead	$19.00

● 24VDC Power Supplies

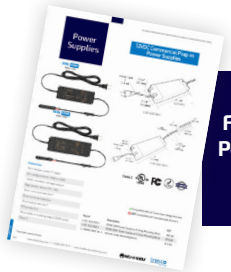

For details see Power Supplies on Page 384.

Part #	Description	SLP
L-24DCELT96-1	96W 24VDC Power Supply w/ 5 Barrel Out - White†	$185.15
L-24DCELT48-BL-1	48W 24VDC Power Supply w/ 5 Barrel Out - Black†	$166.15
L-24DCELT15WP-1	15W 24VDC Wall Mount Power Supply w/ Snap Connector*†	$63.65
L-24DCH96X1-1	96W 24VDC Dimmable Hardwire Power Supply*§	$325.35
L-24DCH96X3-1	288W 24VDC Dimmable Hardwire Power Supply*§	$573.35
L-24DCH96X4-120-277V-1	384W 24VDC Commercial Hardwire 0-10V Dimmable Power Supply	$590.09
L-1BRL5-1	Extra 5 Output Barrel Splice	$20.90

*Does not come with 5 Output Barrel Splice
†Dimmable on trailing edge (24VDC side)
§Dimmable by LED line voltage (120V) wall dimmers

● Snap Connectors

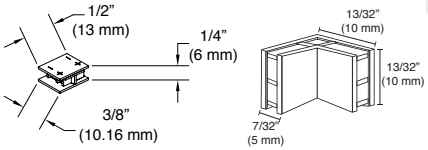

Part #	Description	SLP
L-SPBTB10-1	Snap Panel Back-to-Back Links (10 pcs)	$9.90
L-SP90BTB4-1	Snap Panel 90° Back-to-Back Link (4 pcs)	$18.50

All product dimensions and specifications are subject to change without prior notice.

MADE IN THE USA

12VDC
24V DC

Infinex

Infinex is the innovative, patented, LED aluminum extrusion system by Tresco® Lighting. Gone are the days of set fixture sizes, simply choose your style, cut to desired length and assemble to create a customized LED fixture. Designed by our in-house engineers and made in the USA, Infinex carries a UL safety certification and is available in six profiles with an array of installation options.

Infinex is designed for easy DIY application and we also offer prefabricated custom solutions.

US PATENT NO: D783,533 and 9,618,194

EXTRUSION STYLES AND FEATURES

Available finish Satin Nickel (SC)

SQUARE

MOUNTING

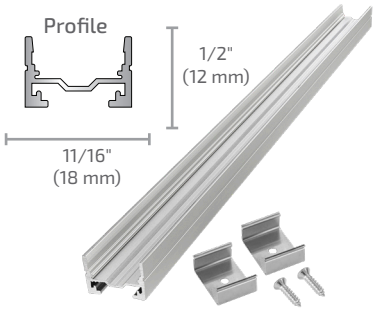

U-Clips sold separately

Couplers Sold Separately

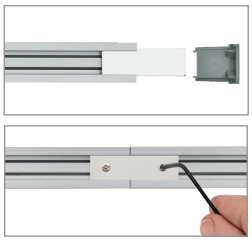

End Caps Sold Separately

Features

Surface mount using magnets, U-Clips or screws

Easily slide magnets into channel on bottom of light

Uses Infinex starter leads

CURVE

MOUNTING

Couplers Sold Separately

U-Clips sold separately

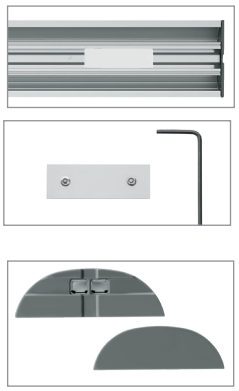

End Caps Sold Separately

Features

Surface mount using magnets, U-Clips or screws

Easily slide magnets into channel on bottom of light

Uses Infinex starter leads

ANGLE

MOUNTING

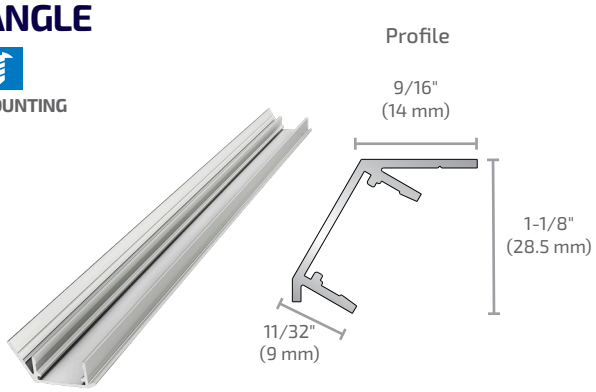

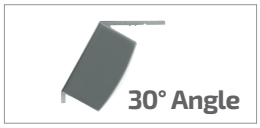

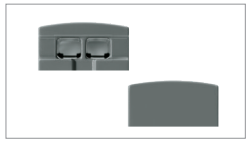

End Caps Sold Separately

Features

For corner mounting with screws only

Fixture directs light at 30° angle

Uses Infinex starter leads

ROUND

MOUNTING

U-Clips sold separately

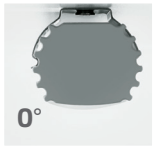

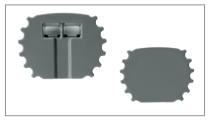

End Caps Sold Separately

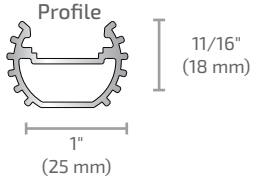

Features

U-Clip mounting allows fixture to be rotated in 15° increments either direction (30°, 15°, 0°, -15°, -30°)

Uses Infinex starter leads

REV-A-SHELF tresco lighting

RECESSED

MOUNTING

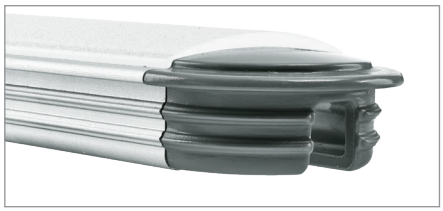

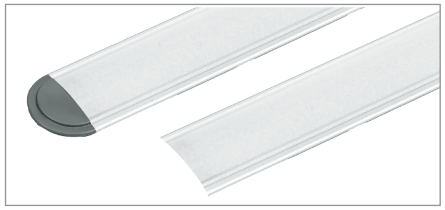

Profile

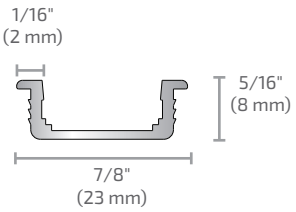

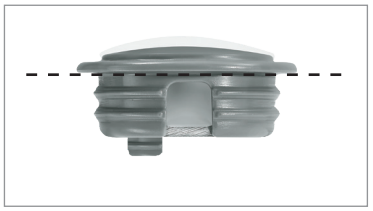

End Caps Sold Separately

Features

Grooved sides allow extrusion to pressure fit into place*

Uses standard FlexTape® starter lead

*With Endcap: Route a channel in wood 21/64" (8.33 mm) depth minimum x .750" (19 mm) width and pressure fit this extrusion in place.

Without Endcap: Route a channel in wood 9/32" (7.14 mm) depth minimum x .750" (19 mm) width and pressure fit this extrusion in place.

Recessed extrusion uses standard FlexTape® starter lead. (L-LED-TPEPKT-2M-1, L-24B2SPKT-2M-1)

Recessed End Cap Dimensions:

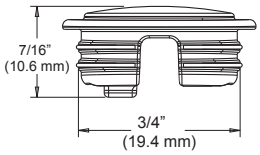

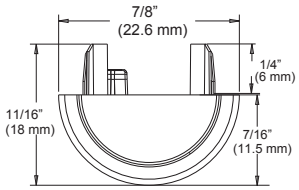

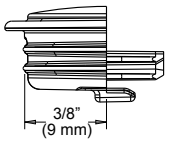

FLUSH

MOUNTING

Profile

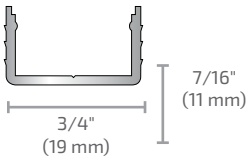

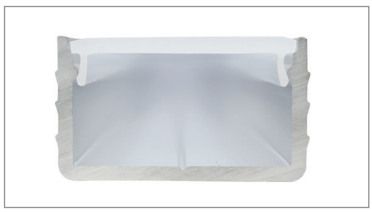

No End Caps

Features

No end caps…this extrusion is meant for channels that go the entire width or height of the casework

Comes with milk diffuser (unattached)

Uses standard FlexTape® starter lead

*Route a channel in wood 7/16" (11 mm) depth x 3/4" (19 mm) width and pressure fit this extrusion in place.

Flush extrusion uses standard FlexTape® starter lead. (L-LED-TPEPKT-2M-1, L-24B2SPKT-2M-1)

All product dimensions and specifications are subject to change without prior notice.

● Required
● Optional

● Extrusions

L-XANG

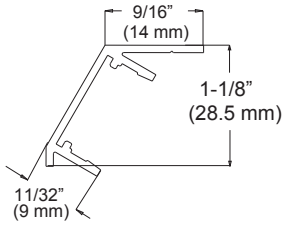

L-XCRV

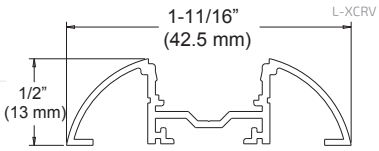

L-XREC

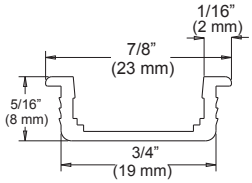

L-XRND

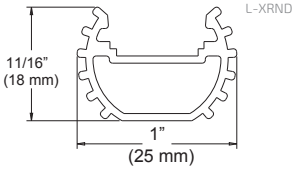

L-XSQR

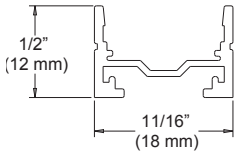

L-XFL

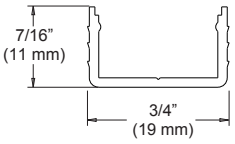

Part #	Description	SLP
L-XANG72-SC-1	72" (1.8 m) Angled Extrusion, Satin Clear	$32.75
L-XCRV72-SC-1	72" (1.8 m) Curved Extrusion, Satin Clear	$32.75
L-XREC72-SC-1	72" (1.8 m) Recessed Extrusion, Satin Clear	$26.95
L-XREC94-SC-1	94" (2.4 m) Recessed Extrusion, Satin Clear	$35.60
L-XRND72-SC-1	72" (1.8 m) Round Extrusion, Satin Clear	$30.70
L-XSQR72-SC-1	72" (1.8 m) Square Extrusion, Satin Clear	$28.15
L-XFL72-SC-1	72" (1.8 m) Flush Extrusion, Satin Clear with Milk Diffuser	$43.65
L-XFL94-SC-1	94" (2.4 m) Flush Extrusion, Satin Clear with Milk Diffuser	$59.65

● Power Supplies

For details see Power Supplies on Page 384.

Infinex works with all Tresco® 12VDC and 24VDC power supplies.

● Diffusers

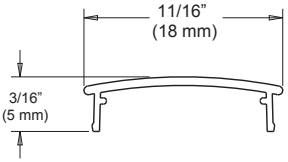

Part #	Description	SLP
L-X**-DIFF-CL-1	Diffuser, Clear	$14.65
L-X**-DIFF-FR-1	Diffuser, Frosted	$14.65
L-X**-DIFF-MLK-1	Diffuser, Milk	$16.80

**Insert 72 for 72" (1.8 m) length, or 94 for 94" (2.4 m) length

● End Cap Sets

L-XANGECP

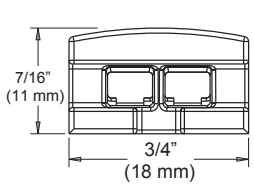

L-XCRVECP

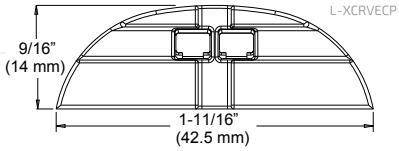

L-XRECECP

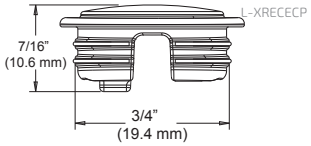

L-XRNDECP

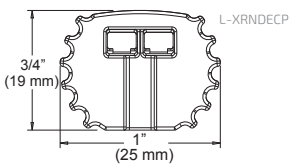

L-XSQRECP

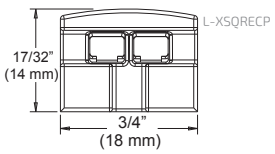

Part #	Description	SLP
L-XANGECP-GY-1	Angled end cap set, Gray	$3.85
L-XCRVECP-GY-1	Curved end cap set, Gray	$3.85
L-XRECECP-GY-1	Recessed end cap set, Gray	$3.85
L-XRNDECP-GY-1	Round end cap set, Gray	$3.85
L-XSQRECP-GY-1	Square end cap set, Gray	$3.85

All product dimensions and specifications are subject to change without prior notice.

● Required
● Optional

● 12/24VDC Infinex Starter Cords

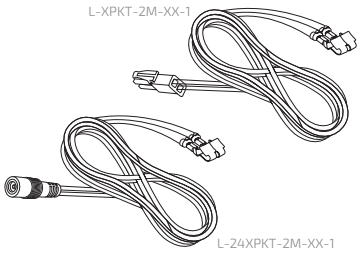

Part #	Description	SLP
L-XPKT-2M-BL-1	12VDC 79" (2 m) Infinex Starter Cord, Black	$11.80
L-XPKT-2IN-BL-1	12VDC 2" (50 mm) Infinex Starter Cord, Black	$4.80
L-XPKT-2M-WH-1	12VDC 79" (2 m) Infinex Starter Cord, White	$11.80
L-XPKT-2IN-WH-1	24VDC 2" (50 mm) Infinex Starter Cord, White	AV$4.80

To be used with square, curved, round and angled extrusions only.

● 12/24VDC Standard FlexTape® Starter Cords

Recessed and Flush extrusions uses standard FlexTape® starter lead.

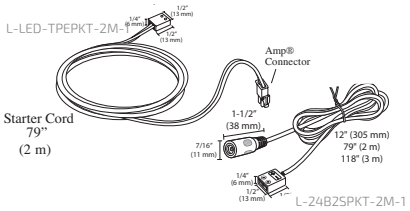

Part #	Description	SLP
L-LED-TPEPKT-2M-1	12VDC 79" (2 m) FlexTape® Straight Starter Lead	$13.20
L-TPEPKT-2IN-1	12VDC 2" (50 mm) FlexTape® Straight Starter Lead	$8.20
L-24B2SPKT-305MM-1	24VDC 305 mm (1") FlexTape® Barrel/2 Screw Trml Starter Lead, White	$14.50
L-24B2SPKT-2M-1	24VDC 2 m (79") FlexTape® Barrel/2 Screw Trml Starter Lead, White	$14.35
L-24B2SPKT-3M-1	24VDC 3m (118") FlexTape® Barrel/2 Screw Trml Starter Lead, White	$27.60

● U-Clips/Magnets

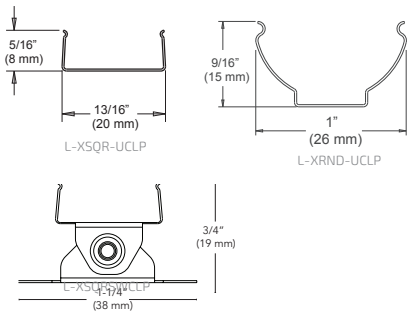

Part #	Description	SLP
L-XRND-UCLP-1	Round U-Clips Set (2 Clips)	$2.55
L-XSQR-UCLP-1	Square/Curved U-Clips Set (2 Clips)	$2.55
L-XSQRSWCLP-1	Square/Curved Swivel Clips Set (2 Clips)	$11.65
L-XRM42-155-1	Set of 2 Magnets	$10.10
L-EXTMP-VHB-1	Set of 2 Mounting Plates	$5.90

One U-Clip/magnet is recommended for every 1 ft. (.3 m) of extrusion.
No. #4 Phillips flat head screws are included with each U-Clip set.
Mounting Plates to be used with magnet mounted Infinex.

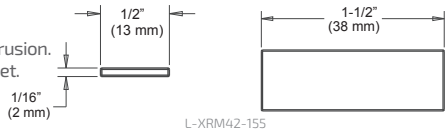

● Couplers

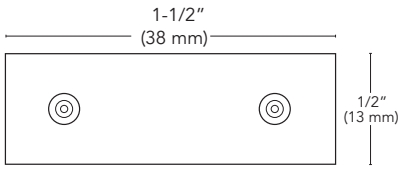

Part #	Description	SLP
L-EXTBTB10-1	Pack of 10 Couplers	$22.20

To be used on square and curved extrusions only.

● 12/24VDC Linking Cords

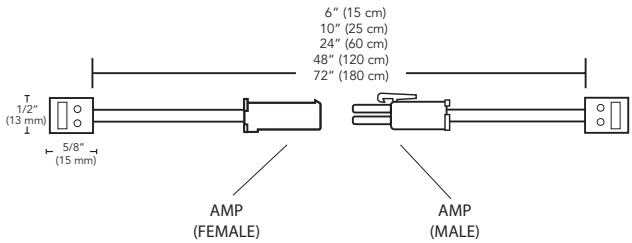

Part #	Description	SLP
L-XLNK-15-**-1	12/24VDC 6" (15 cm) Infinex Linking Cord	$13.40
L-XLNK-25-**-1	12/24VDC 10" (25 cm) Infinex Linking Cord	$13.70
L-XLNK-60-**-1	12/24VDC 24" (60 cm) Infinex Linking Cord	$15.95
L-XLNK-120-**-1	12/24VDC 48" (120 cm) Infinex Linking Cord	$17.25
L-XLNK-180-**-1	12/24VDC 72" (180 cm) Infinex Linking Cord	$19.80

** Insert BL for Black and WH for White

End Caps not used on linked extrusion ends.

COMPONENTS: POWER SUPPLIES, CONTROLLERS & MORE SEE PAGE 384.

All product dimensions and specifications are subject to change without prior notice.

Power Supplies

12VDC Commercial Plug-in Power Supplies

30W 12VDC
100V - 277V

60W 12VDC
100V - 277V

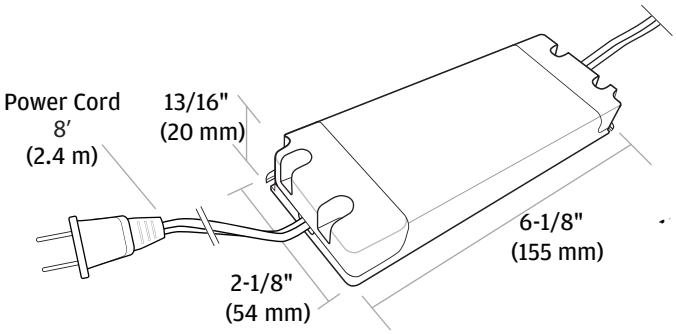

L-DC-SLELT30-1

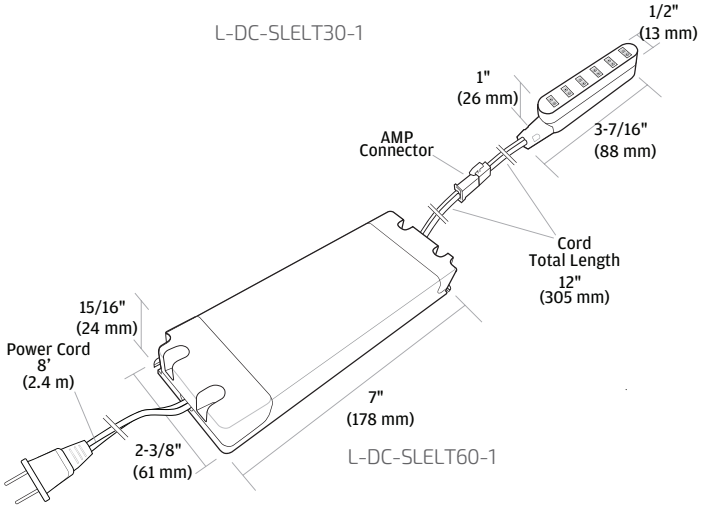

L-DC-SLELT60-1

Class 2 | cULus LISTED | FC | RoHS | 5 YEAR WARRANTY

Features:

- Slim design, under 1" height
- (2) configurations: 30W or 60W
- 12VDC constant voltage output
- High power factor (Pf > .95)
- Short circuit protection*
- Overcurrent protection
- Overload protection*
- RFI protection
- Dimmable on trailing edge (12VDC side)
- Class 2

✔ Compatible with all Tresco low voltage dimmers

🚫 **NOT** compatible with hardwire wall dimmers

Part #	Description	SLP
L-DC-SLELT30-1	12VDC 30W Power Supply w/6 Snap Mounting Block	$91.80
L-DC-SLELT60-1	12VDC 60W Power Supply w/6 Snap Mounting Block	$118.90
L-TRANS-MNT-BL-1	Extra 6-Snap Mounting Block	$12.60

* Automatic reset (no fuses)

REV-A-SHELF tresco lighting

Economy Series

12VDC EquiLine Plug-in Power Supplies

6W 12VDC
100V - 240V

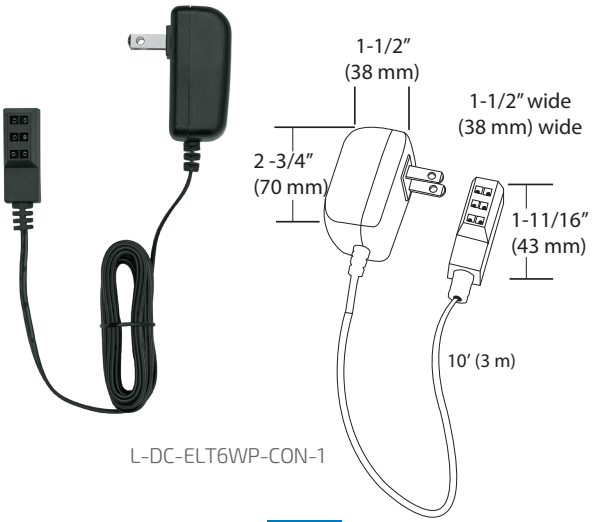

L-DC-ELT6WP-CON-1

15W 12VDC
100V - 240V

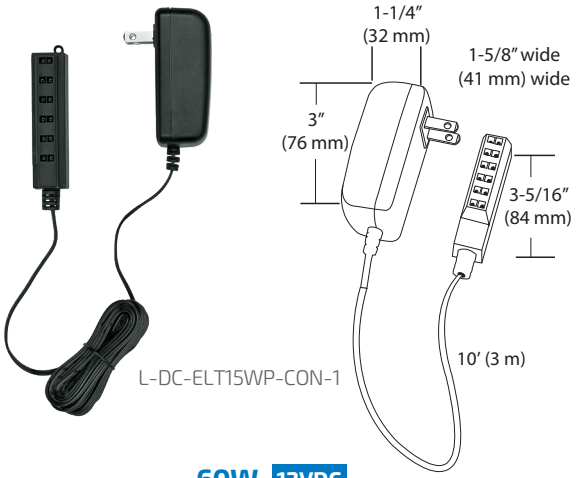

L-DC-ELT15WP-CON-1

30W 12VDC
100V - 277V

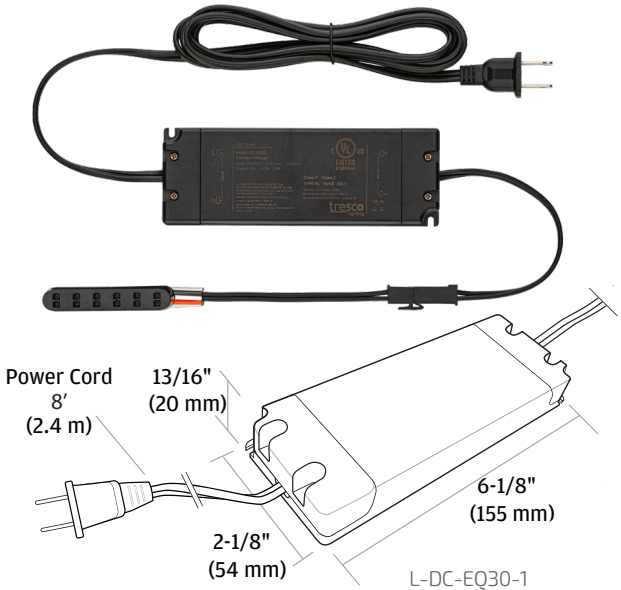

L-DC-EQ30-1

60W 12VDC
100V - 277V

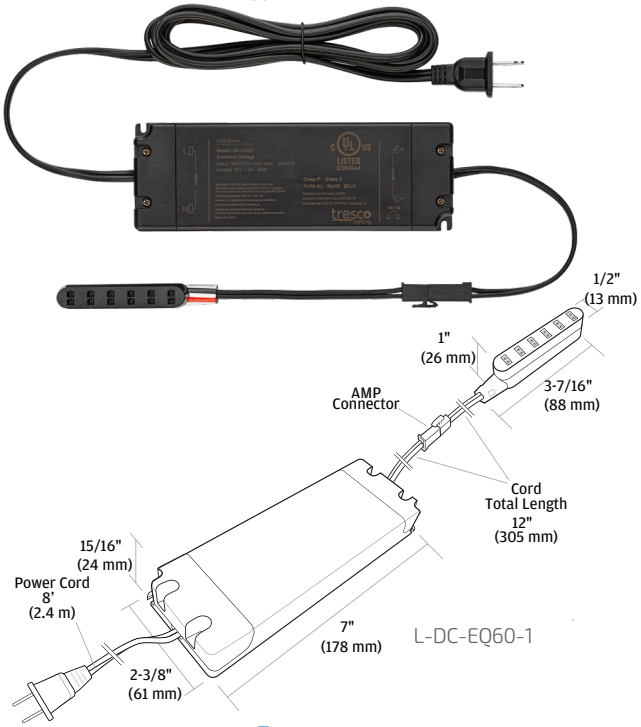

L-DC-EQ60-1

Class 2 cULus LISTED FC RoHS

✔ Compatible with all Tresco® low voltage dimmers

⊘ **NOT** compatible with hardwire wall dimmers

Part #	Description	SLP
L-DC-ELT6WP-CON-1	12VDC 6W Wall Mount Power Supply w/3 Snap Block	$30.90
L-DC-ELT15WP-CON-1	12VDC 15W Wall Mount Power Supply w/6 Snap Block	$40.30
L-DC-EQ30-1	12VDC 30W EquiLine Power Supply w/6 Snap Block	$62.80
L-DC-EQ60-1	12VDC 60W EquiLine Power Supply w/6 Snap Block	$84.35
L-TRANS-MNT-BL-1	Extra 6-Snap Mounting Block	$12.60

*Automatic Reset (no fuses)

Features:

- (4) Configurations: 6-60 Watt
- 12VDC constant voltage output
- Short circuit protection*
- Overload protection*
- RFI Protection
- Dimmable on trailing edge (12VDC side)
- Class 2
- 2-Year warranty

12VDC Commercial Wall Dimmable Hardwire Power Supplies

30W 12VDC
100V - 277V

60W 12VDC
100V - 277V

Features:

- Under 1" height
- (2) configurations: 30W or 60W
- 12VDC constant voltage output
- High power factor (Pf > .95)
- Dimmable by standard LED wall dimmers
- Continuous smooth dimming
- Wire directly into unit
- Electronic units are lower profile and generate less heat than magnetic transformers
- Quiet operation
- Works with all Tresco® 12VDC dimmable LED fixtures
- One 6-snap mounting block included
- RFI Protection
- Class 2 with short circuit and automatic reset

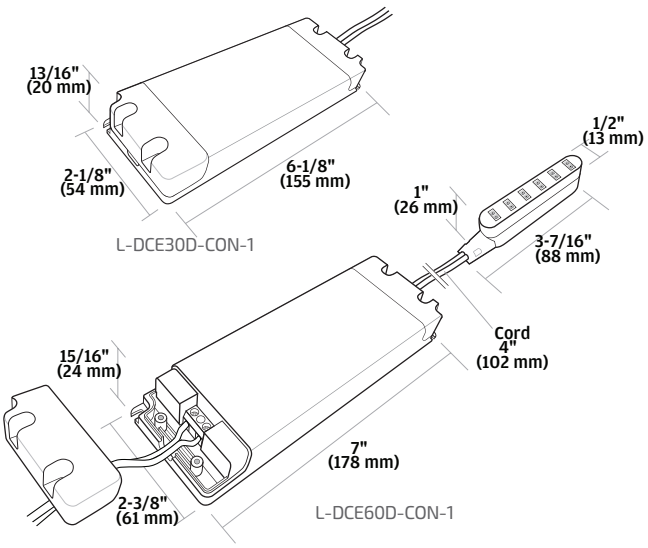

✓ Compatible with all Tresco® low voltage dimmers
✓ Compatible with hardwired LED wall dimmers

Class 2 · cULus LISTED · FC · RoHS · SELV · 5 YEAR WARRANTY

Part #	Description	SLP
L-DCE30D-CON-1	12VDC 30W Hardwire Dimmable LED Power Supply	$119.50
L-DCE60D-CON-1	12VDC 60W Hardwire Dimmable LED Power Supply	$194.00
L-TRANS-MNT-BL-1	Extra 6-Snap Mounting Block	$12.60

Compatible Tresco Wall Dimmers (page 403).

Dimmable by LED compatible line voltage (120V) wall dimmers. Mounting block included. Requires electrician to install.

12VDC Industrial Wall Dimmable Hardwire Power Supplies

(1x 60W output)

60W 12VDC

100V - 277V

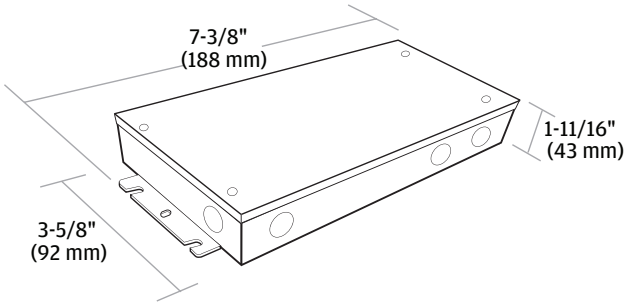

L-12DCH60X1-1

(3x 60W output)

180W 12VDC

100V - 277V

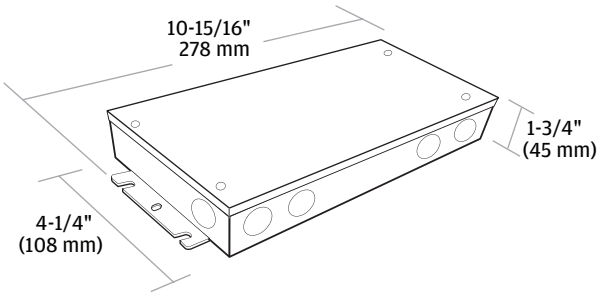

L-12DCH60X3-1

Class 2 | cULus LISTED | FC | RoHS | SELV | 5 YEAR WARRANTY

- Compatible with all Tresco® low voltage dimmers
- Compatible with hardwired LED wall dimmers

Features:

- Slim design, under 2" height
- (2) configurations: 60W or 180W
- 12VDC constant voltage output
- High power factor (Pf > .95)
- Built-in hardwire compartment
- All metal construction
- Short circuit protection*
- Overcurrent protection
- Overload protection*
- RFI protection
- Dimmable by standard LED wall dimmers
- Class 2

* Automatic reset (no fuses)

Part #	Description	SLP
L-12DCH60X1-1*	12VDC 60W Commercial/Industrial Metal Hardwire Dimmable Power Supply	$199.55
L-12DCH60X3-1*	12VDC 180W Commercial/Industrial Metal Hardwire Dimmable Power Supply	$416.30
L-TRANS-MNT-BL-1	Extra 6-Snap Mounting Block	$12.60

* Does not include 6-snap mounting block

Dimmable by LED line voltage (120V) wall dimmers. Mounting block not included

Requires electrician to install.

Compatible Tresco Wall Dimmers (page 403).

All product dimensions and specifications are subject to change without prior notice.

24VDC Commercial Plug-in Power Supplies

Features:

- Slim design, under 1.6" height
- 24VDC constant voltage output
- High power factor (Pf > .95) ***96W only***
- (5) barrel output (included)
- Short circuit protection*
- Overcurrent protection
- Overload protection*
- RFI protection
- Dimmable on trailing edge (24VDC side)
- Class 2

* Automatic reset (no fuses)

Class 2

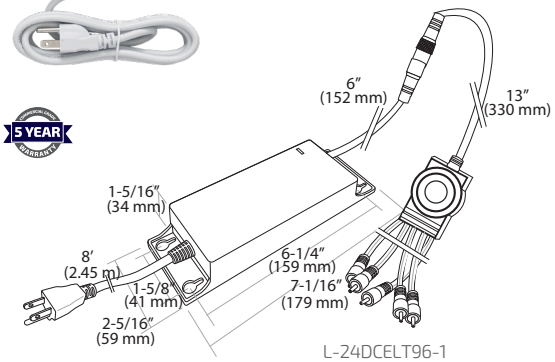

L-24DCELT96-1

Part #	Description	SLP	
L-24DCELT96-1	24VDC 96W Power Supply w/ 5 Barrel Out , White	$185.15	✔Compatible with all Tresco low voltage dimmers
L-1BRL5-1	Extra 5 Output Barrel Splice	$20.90	⃠ **NOT** compatible with hardwire wall dimmers

Economy Series

24VDC EquiLine Plug-in Power Supply

15W 24VDC
100V - 240V

Features:

- 24VDC constant voltage output
- Fully enclosed wall mount plastic case
- Single barrel connector output
- Short circuit protection*
- Overcurrent protection
- Overload protection*
- RFI protection
- Dimmable on trailing edge (24VDC side)
- Class 2
- 2-Year warranty

*Automatic Reset (no fuses)

Class 2

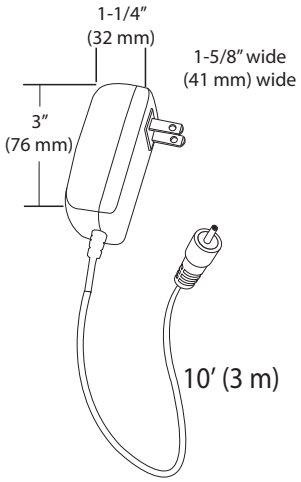

Part #	Description	SLP	
L-24DCELT15WP-1	24VDC 15W Wall Mount Power Supply w/ barrel connector	$63.65	✔Compatible with all Tresco low voltage dimmers
L-1BRL5-1	Extra 5 Output Barrel Splice	$20.90	⃠ **NOT** compatible with hardwire wall dimmers

24VDC Industrial Wall Dimmable Hardwire Power Supplies

(1x 96W output)

96W 24VDC
100V - 277V

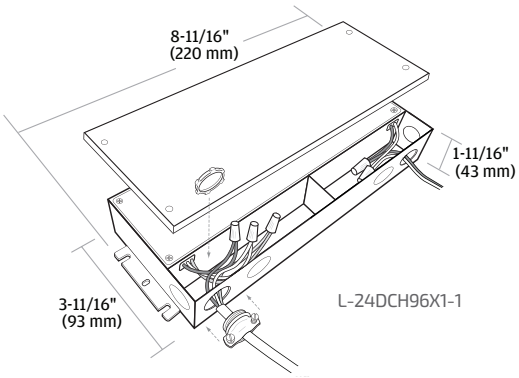

L-24DCH96X1-1

(3x 96W output)

288W 24VDC
100V - 277V

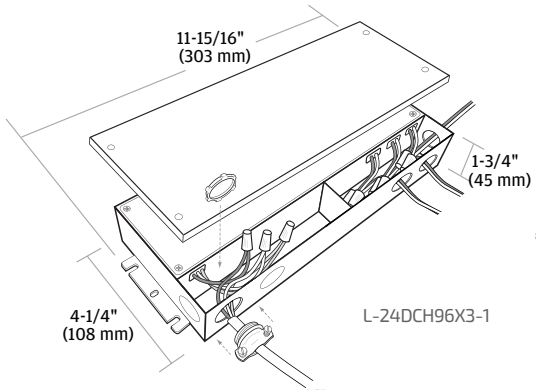

L-24DCH96X3-1

Class 2 SELV

Features:

- Slim design, under 2" height
- 24VDC constant voltage output
- High power factor (Pf>.95)
- Built-in hardwire compartment
- All metal construction
- Short circuit protection*
- Overcurrent protection
- Overload protection*
- RFI protection
- Dimmable by standard LED wall dimmers
- Class 2

* Automatic reset (no fuses)

✔Compatible with all Tresco® low voltage dimmers

✔Compatible with hardwired LED wall dimmers

Part #	Description	SLP
L-24DCH96X1-1*	24VDC 96W Commercial/Industrial Metal Hardwire Dimmable Power Supply	$325.35
L-24DCH96X3-1*	24VDC 288W Commercial/Industrial Metal Hardwire Dimmable Power Supply	$573.35
L-1BRL5-1	Extra 5 Output Barrel Splice	$20.90

*Does not include 5 Output Barrel.

Dimmable by LED line voltage (120V) wall dimmers.
Mounting block not included

Compatible Tresco Wall Dimmers (page 403).

Requires electrician to install.

Commercial Hardwire Phase/0-10V Dimmable Power Supplies

(5 x 60W output)

300W 12VDC

120V - 277V
50hz/60hz

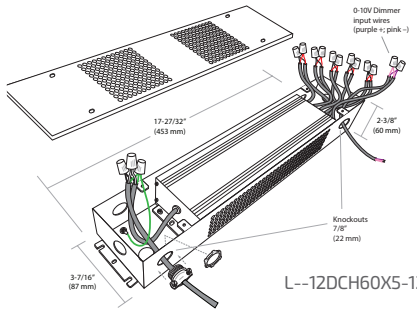

L--12DCH60X5-120-277V-1

(4x 96W output)

384W 24VDC

120V - 277VAC
50hz/60hz

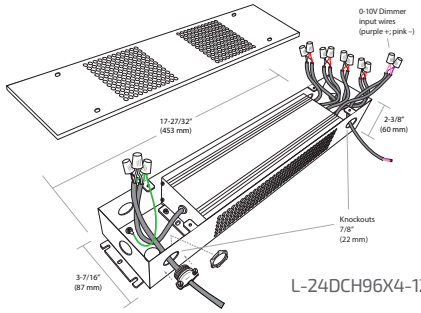

L-24DCH96X4-120-277V-1

Class 2 c UL us LISTED FC RoHS 5 YEAR WARRANTY

Features:

- 12VDC or 24VDC constant voltage output
- High power factor (Pf > .95)
- Built-in hardwire compartment
- Aluminum housing suitable for dry and damp locations
- 0-10V dimmable with dimming down to 0% when controlled by Tresco® L-WLD-010V dimmer
- Short circuit protection*
- Overcurrent protection
- Overload protection*
- RFI protection
- Class 2

* Automatic reset (no fuses)

✔ Compatible with all Tresco® low voltage dimmers
✔ Compatible with hardwired LED wall dimmers

Part #	Description	SLP
L-12DCH60X5-120-277V-1	12VDC 300W Commercial Hardwire 0-10V Dimmable Power Supply	$498.15
L-24DCH96X4-120-277V-1	24VDC 288W Commercial Hardwire 0-10V Dimmable Power Supplyt	$590.09
L-TRANS-MNT-BL-1	Extra 6-Snap Mounting Block (12VDC)	
L-1BRL5-1	Extra 5 Output Barrel Splice (24VDC)	$20.90

THE NATURAL HOME
HANS BLOMQUIST
contemporary natural
BLACK & WHITE (and a bit in between)
JEAN-LOUIS DENIOT INTERIORS
THE ART OF THE INTERIOR
LIFE WORK
HANS BLOMQUIST IN DETAIL
monochrome home
BEYOND CHIC

All product dimensions and specifications are subject to change without prior notice.

Controllers

FREEDiM WIRELESS CONTROL

FREEDiM Series Universal Receiver

12VDC
24V DC

Features:

- 60W Capacity (12VDC); 96W Capacity (24VDC)
- Power failure memory
- Multiple receivers can be used in a single power supply or within a room to achieve multiple zones of control
- Simple one button pairing with dimmers

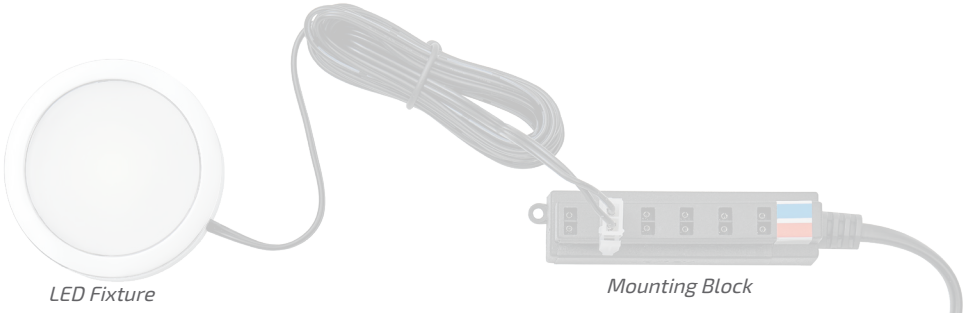

Universal FREEDiM Series Receiver
L-WLD-1REC-1

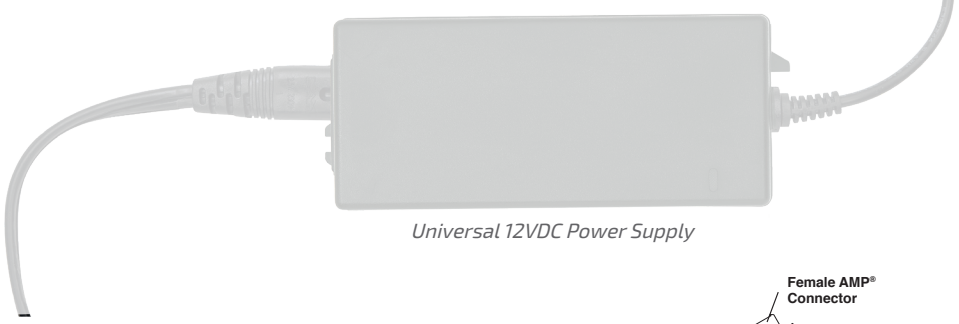

Universal 12VDC Power Supply

Compatible with all single color FREEDiM Series controllers

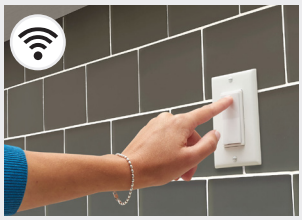

Deco Wall Dimmers

Micro Dimmers

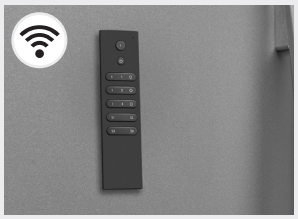

3 Zone Remote

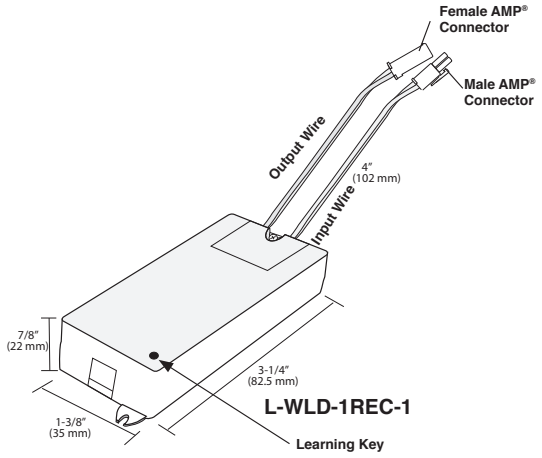

Part #	Description	SLP
L-WLD-1REC-1	12/24VDC FREEDiM Series Receiver	$100.20

A single receiver can be programmed to up to 8 different FREEDiM Series remotes/dimmers
12VDC to 24VDC adaptor cord set included.

PATENT NO. 9,818,559 B2

FREEDiM Series Deco Wall Dimmer

Features:

- Available in single and 2-zone
- Can be programmed to multiple receivers for more lighting control
- Black, white or light almond finish
- Fits Decora® style wall plates
- 65 ft. (20 m) range of control from dimmer to receiver
- Controls all Tresco® 12/24VDC dimmable low voltage lights
- Unlike traditional hardwire dimmers, you can control the same set of lights from multiple Deco Wall Dimmers

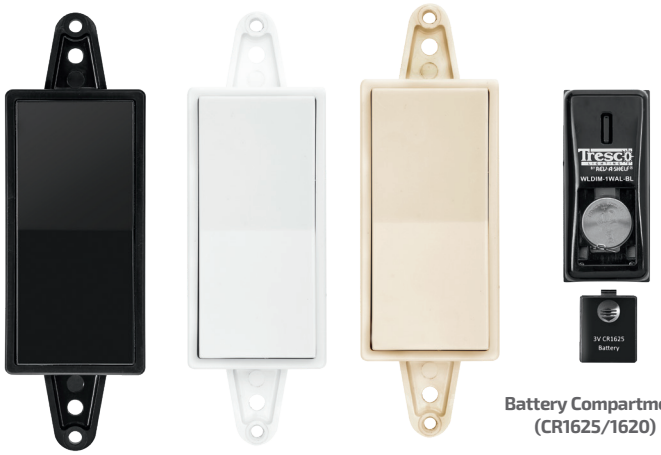

Battery Compartment (CR1625/1620)

Easily remove switch from docking tray to replace batteries or use as a remote dimmer

Also available in 2-Zone:

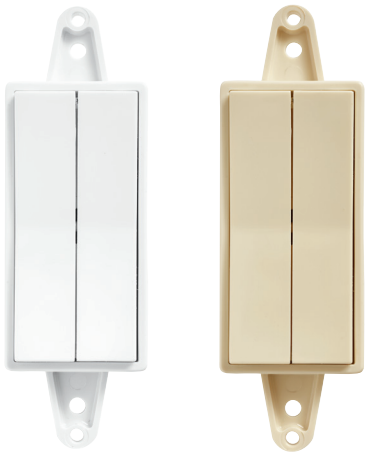

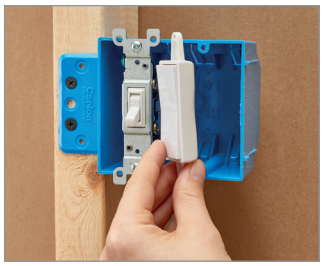

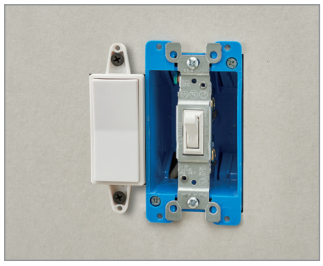

Can be mounted to standard wall electrical boxes or to drywall

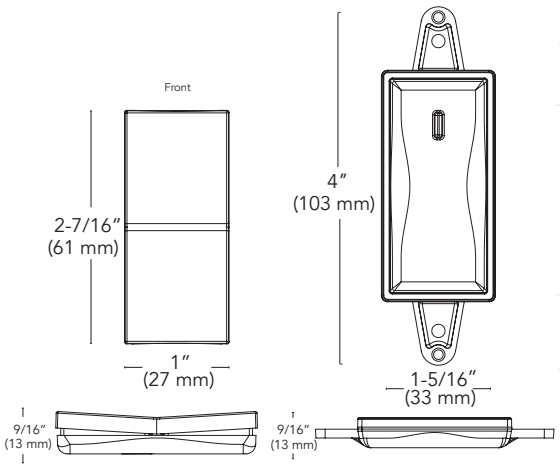

Part #	Description	SLP
L-WLD-1WAL-**-1	FREEDiM Series Deco Wall Dimmer	$154.25
L-WLD-2WAL-**-1	FREEDiM Series Two-Zone Deco Wall Dimmer	$154.25
L-WLD-1REC-1	12/24VDC FREEDiM Series Receiver	$100.20

**Insert BL for Black (only available in single zone), WH for White, LA for Light Almond

A single dimmer can be programmed to up to 10 different receivers.

Must have at least one receiver (L-WLD-1REC-1) to operate

A single receiver can be programmed to up to 8 different FREEDiM Series remotes/dimmers

All product dimensions and specifications are subject to change without prior notice.

FREEDiM Series Wireless Controllers

FREEDiM WIRELESS CONTROL

FREEDiM Series Micro Dimmer

Features:

- Single zone wireless dimmer
- Black or Nickel finish
- Easy to replace, long life lithium battery
- 65 ft. (20 m) range of control from dimmer to receiver
- Controls all Tresco® 12/24VDC dimmable low voltage lights
- Recess or surface mount

Integrated Magnet

Battery Compartment (CR2025)

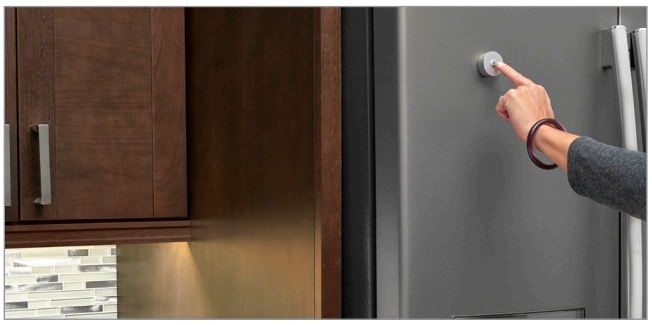

Integrated magnet allows for mounting to refrigerator or other metallic surfaces

Easy (2) screw installation

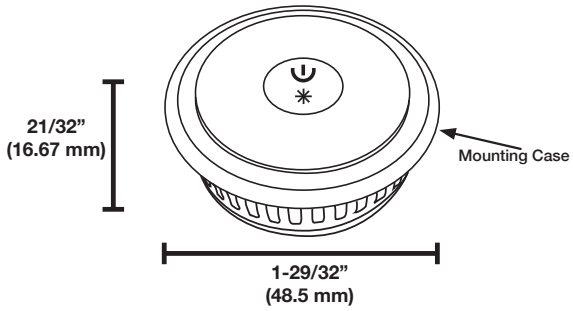

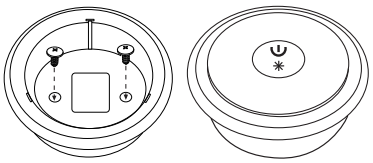

Surface Mount

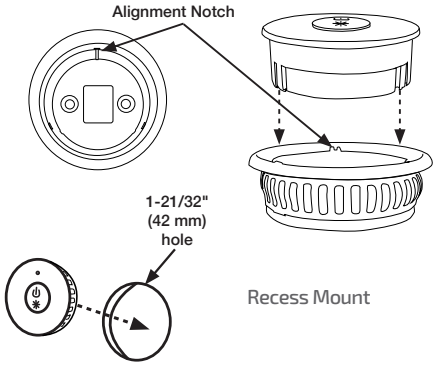

Recess Mount

Part #	Description	SLP
L-WLD-1RND-BL-1	FREEDiM Series Micro Dimmer, Black	$47.00
L-WLD-1RND-NI-1	FREEDiM Series Micro Dimmer, Nickel	$47.00
L-WLD-1REC-1	12/24VDC FREEDiM Series Receiver	$100.20

Must have at least one receiver (L-WLD-1REC-1) to operate

A single dimmer can be programmed to up to 10 different receivers.

A single receiver can be programmed to up to 8 different FREEDiM Series remotes/dimmers

FREEDiM Series 3 Zone Remote

FREEDiM WIRELESS CONTROL

Features:

- Independent control of 3 lighting zones from single remote
- Program additional receivers to separate the lighting in a room into multiple zones that you can control independently
- Set brightness levels of all of the zones to a desired level then save as a "scene"
- 65 ft. (20 m) range of control from remote to receiver
- Controls all Tresco® 12/24VDC dimmable low voltage lights

Integrated magnet allows for mounting to refrigerator or other metallic surfaces.

Docking tray can be screw mounted. Remotes attach to tray magnetically.

3-Zone
(CR2032 Battery)

Battery Compartment
(CR2032 Battery)

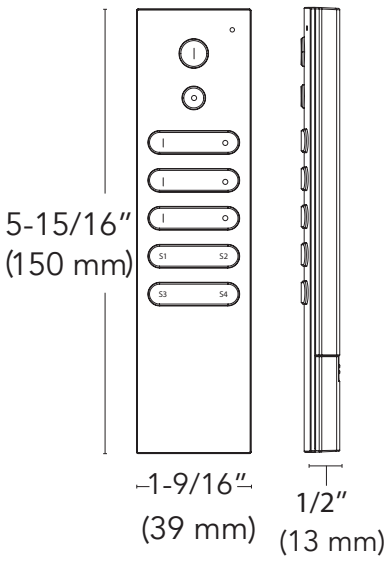

Part #	Description	SLP
L-WLD-3RMT-BL-1	FREEDiM Series 3-Zone remote, Black	$70.90
L-WLD-1REC-1	12/24VDC FREEDiM Series Receiver	$100.20

Must have at least one receiver (L-WLD-1REC-1) to operate

A single receiver can be programmed to up to 8 different FREEDiM Series remotes/dimmers

All product dimensions and specifications are subject to change without prior notice.

Wireless Door Sensor Receiver

12VDC
24VDC

FREEDiM WIRELESS CONTROL

Features:

- 60W capacity (12VDC); 96W capacity (24VDC)
- Power failure memory
- Install inline between power supply and lights
- Simple one button pairing with Wireless Door Sensors
- Single receiver can be programmed with up to (4) sensors
  (Allows for up to 4 doors to control the same light fixtures.)

c UL us

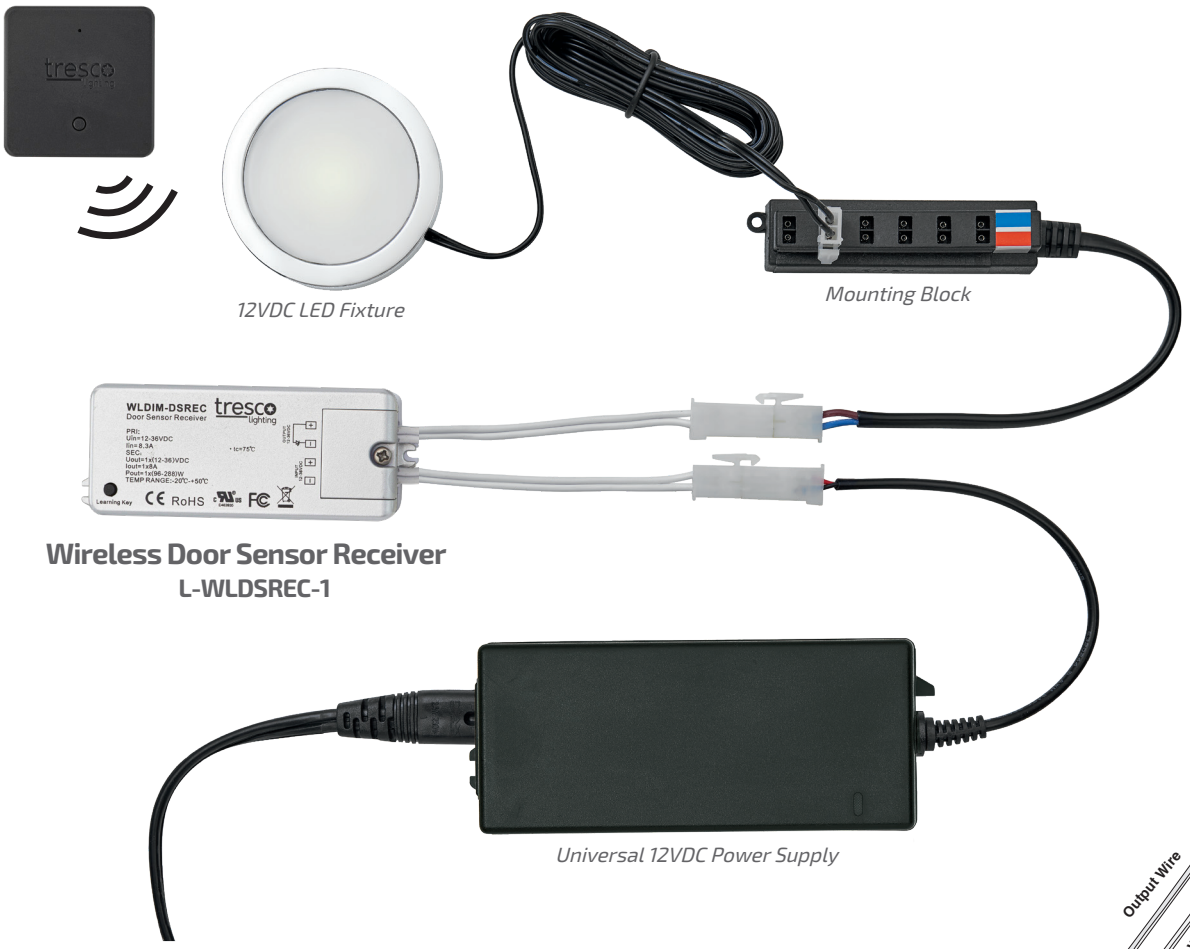

12VDC LED Fixture

Mounting Block

Wireless Door Sensor Receiver
L-WLDSREC-1

Universal 12VDC Power Supply

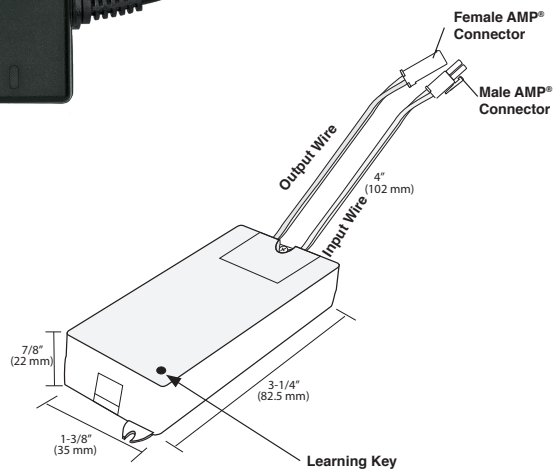

Part #	Description	SLP
L-WLDSREC-1	12/24VDC Wireless Door Sensor Receiver	$96.70

Single receiver can be programmed with up to 4 door sensors.
12VDC to 24VDC adaptor cord set included.

Wireless Door Sensor

FREEDiM WIRELESS CONTROL

Features:

- Allows light to be controlled by multiple doors
- Black or Nickel
- Simple push-button pairing with receiver (sold separately)
- Program up to (4) sensors to a single L-WLDSREC-1 receiver
- No cumbersome, messy wires to have to hide inside your cabinetry
- Mounting hardware (included)

Long-lasting CR2032 battery

Activated by a magnet; simply adhere to the inside of cabinet door with included double-stick adhesive

Comes with (3) stick-on magnet covers in black, brown and white

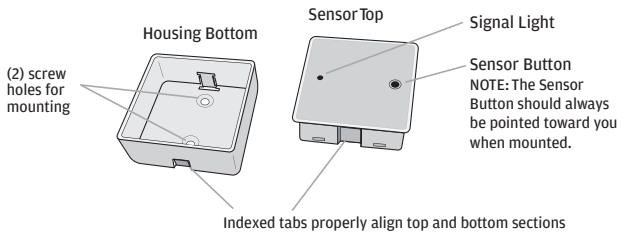

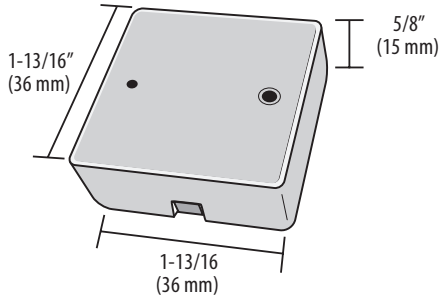

Part #	Description	SLP
L-WLDS-BL-1	FREEDiM Wireless Door Sensor, Black	$66.25
L-WLDS-NI-1	FREEDiM Wireless Door Sensor, Nickel	$66.25

Must have at least one receiver (L-WLDSREC-1) to operate

All product dimensions and specifications are subject to change without prior notice.

Economy Series

EquiLine Receiver

12VDC
24VDC

FREEDiM WIRELESS CONTROL

Features:

- 60W capacity (12VDC); 96W capacity (24VDC)
- Install inline between power supply and lights
- Power failure memory (retains last dim setting)
- 5" (127 mm) input and output cord attached
- Compatible with EquiLine FREEDiM Series Wireless Dimmer and Wireless Dimmer with Motion
- Simple one button pairing with EquiLine FREEDiM Series dimmers
- One receiver per dimmer required, receiver cannot be programmed to multiple dimmers
- 2-year warranty

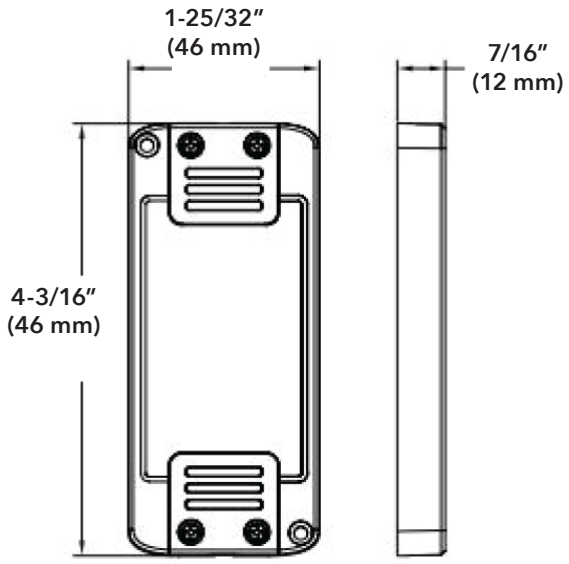

CE cULus LISTED FC

EquiLine Wireless Dimmer
L-EQW-1DIM-BL-1

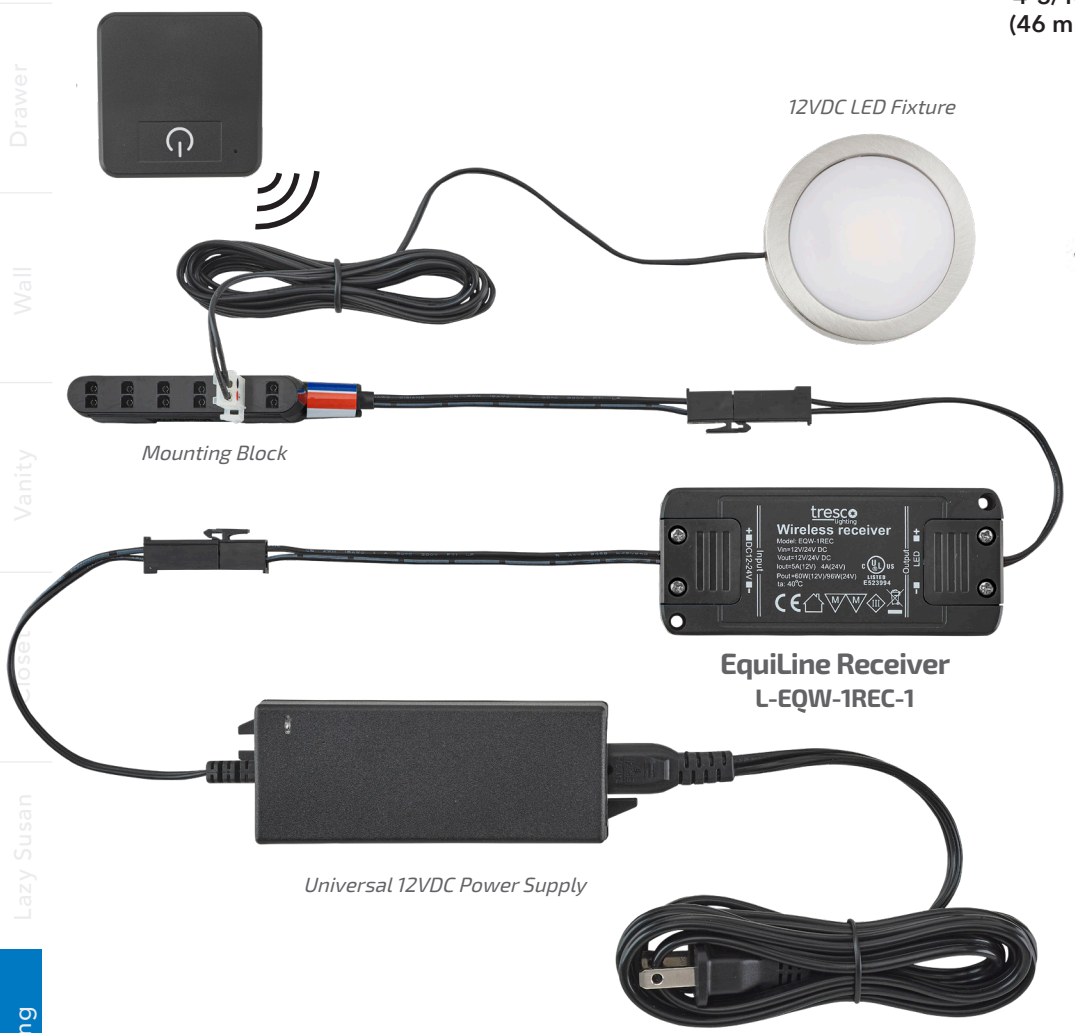

Economy Series

EquiLine Wireless Dimmers

12VDC
24VDC

FREEDiM WIRELESS CONTROL

Features:

- Available in a motion sensor + dimmer or dimmer only
- Black or nickel finish
- Controls all Tresco® 12/24VDC single color dimmable low voltage lights
- Easy to replace, long life lithium CR2032 battery (included)
- Simple one button pairing with receiver (L-EQW-1REC-1)
- No cumbersome, messy wires for easy installation
- Surface mount using magnet backed with 3MTM tape or screw (included)

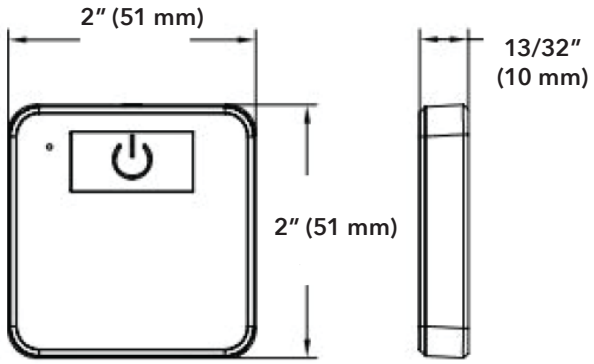

Wireless Dimmer

Short touch to switch ON/OFF
Long touch to dim from 10% - 100%
Maximum Remote Range: up to 33' (10 m)

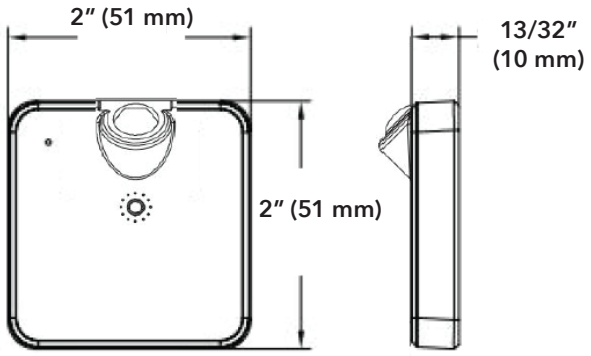

Wireless Dimmer with Motion

Turns on light when motion is detected
Turns off light 45 seconds after movement is no longer detected
Long touch to dim from 10% - 100%
Maximum Remote Range: up to 33' (10 m)
Motion Range: 3-10' (1-3 m)

Part #	Description	SLP
L-EQW-KITD-**-1	12/24VDC 60W/96W EquiLine Receiver and Wireless Dimmer	$123.25
L-EQW-KITMD-**-1	12/24VDC 60W/96W EquiLine Receiver and Wireless Dimmer w/ Motion	$123.25

**Insert (BL) for Black and (NI) for Nickel
12VDC to 24VDC adaptor cord set included.

Only one receiver and one dimmer can be paired and are sold together as a kit. You cannot program multiple dimmers to one receiver. If individual parts are needed, please contact Tresco® customer service.

All product dimensions and specifications are subject to change without prior notice.

Wireless Remote Control Dimmers

12VDC
24VDC

Remote Control LED Dimmers feature radio-frequency, remote-control dimming to adjust lights from anywhere in the room up to 30' (9 m). The remote control provides on/off power and dims lights from 100%-1%.

Universal Remote Dimmer

Controls up to 12VDC/60W or 24VDC/96W of LED lighting

Features a built-in memory that recalls the last setting when turned on

Comes with two remote controls (one as a backup)

No line of sight required

Can control multiple dimmers in same room with single remote control for universal dimming

Dims lights from 100%-1%

Dedicated Remote Control Dimmer

Controls up to 12VDC/60W or 24VDC/96W of LED lighting

Features a built-in memory that recalls the last setting when turned on

No line of sight required

Comes with two remote controls (one extra, as a backup) that are synchronized to control the same dimmer

Can use multiple independently controlled dimmers in the same room

Dims lights from 100%-1%

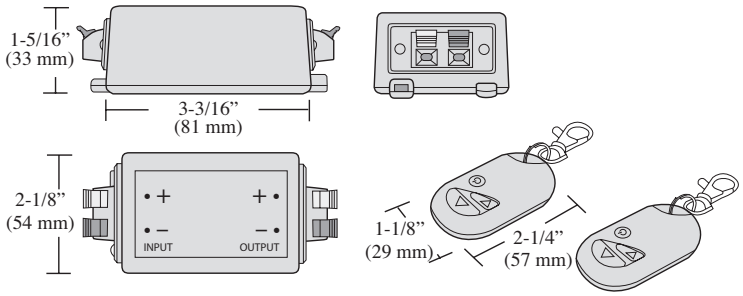

Part #	Description	SLP
L-LED-DIMRMT-12V8A-1	12/24VDC LED Dedicated Remote Control Dimmer	$77.70
L-LED-DIMRMT-12V8A-U-1*	12/24VDC LED Universal Remote Control Dimmer	$77.70

***Recommended not to exceed 3 per room**

Placement of multiple dimmers in a room may be critical for proper function depending on set-up and obstacles.

NEW! IMPROVED DESIGN

Round Controllers

12VDC
24VDC

Max Wattage: 12VDC/60W; 24VDC/96W

79" (2 m) input cord and 6" (152 mm) output cord attached

Controls all Tresco® single color dimmable low voltage lights

Available in a Black or Nickel finish

Improved smaller design allows controllers to be easily recessed using a 1/2" (13 mm) drill bit

Recess or surface mount with included surface mount clip

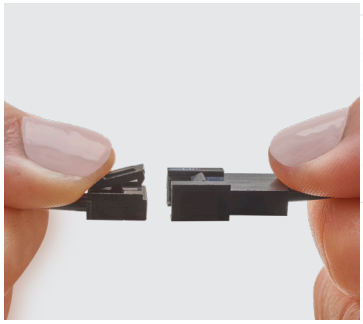

The addition of small connectors allow for wire shortening and easier wire management during install.

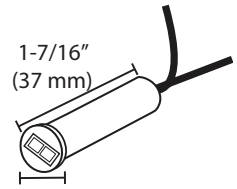

Single Door Sensor

Door open, light on; door closed, light off

Sensor Range: 1/16" - 2" (2 mm - 50 mm)

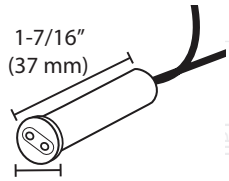

Two Door Sensor

Either door open, light on; both doors closed, light off

Sensor Range: 1/16" - 2" (2 mm - 50 mm)

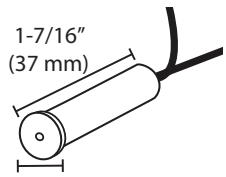

Touch Dimmer

Touch on/off and 0-100% dimming control

Hold finger down for dimming

Touch dimmer once to turn on/off

Power failure memory (retains last setting)

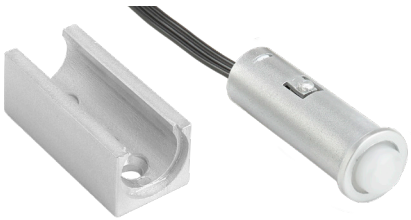

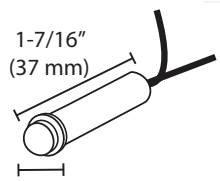

Motion Sensor

Turns on when human motion is detected

Sensor Range: 0" – 118" (0 mm – 3000 mm)

Viewing degree: 120°

Time on: 30 secs if no motion

Part #	Description	SLP
L-RSDS-**-1	12/24VDC 60W/96W Round Single Door Sensor	$49.00
L-RSDS2-**-1	12/24VDC 60W/96W Round Two Door Sensor	$58.15
L-RSDIM-**-1	12/24VDC 60W/96W Round Touch Dimmer	$53.65
L-RSMOT-NI-1	12/24VDC 60W/96W Round Motion Sensor, Nickel	$44.25

**Available in Black (BL) and Nickel (NI). Surface mount clip packaged with each controller.
Motion Sensor available in Black (BL) with a minimum quantity order.
12VDC to 24VDC adaptor cord set included.

All product dimensions and specifications are subject to change without prior notice.

Manual In-Line Rotary Dimmer

12VDC
24VDC

Features:

- Capacity: 12VDC/48W; 24VDC/96W
- 100-0% dimming and on/off power
- 79" (2 m) input lead and 8" (203 mm) output lead
- (2) screws for mounting

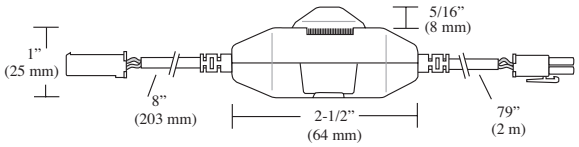

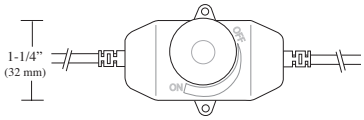

Part #	Description	SLP
L-LED-DIMCON-BL-1	LED Black Inline Rotary Dimmer, 12VDC/24VDC	$43.05
L-LED-DIMCON-WH-1	LED White Inline Rotary Dimmer, 12VDC/24VDC	$43.05
L-24VDC3INADP-BL-1	12VDC to 24VDC Controller Adaptor Cord Set Black	$14.90
L-24VDC3INADP-WH-1	12VDC to 24VDC Controller Adaptor Cord Set White	$14.90

Adaptor Cord Set required for 24VDC operation.

Round Switch

12VDC
24VDC

Capacity: 12VDC/60W; 24VDC/96W

Front View

Available in Black and White

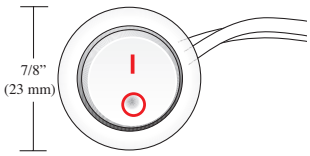

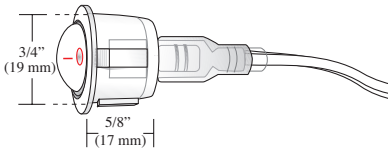

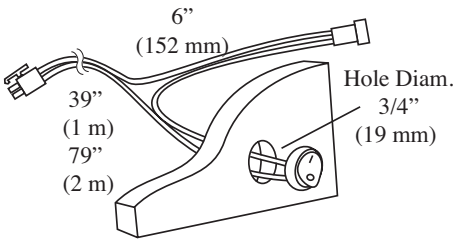

3/4" (19 mm) hole required.

Part #	Description	SLP
L-RDSW-1M-BL-1	12/24VDC Rocker Switch w/ 39" (1 m) Lead, Black	$19.75
L-RDSW-1M-WH-1	12/24VDC Rocker Switch w/ 39" (1 m) Lead, White	$19.75
L-RDSW-2M-BL-1	12/24VDC Rocker Switch w/ 79" (2 m) Lead, Black	$22.60
L-RDSW-2M-WH-1	12/24VDC Rocker Switch w/ 79" (2 m) Lead, White	$22.60
L-24VDC3INADP-BL-1	12VDC to 24VDC Controller Adaptor Cord Set Black	$14.90
L-24VDC3INADP-WH-1	12VDC to 24VDC Controller Adaptor Cord Set White	$14.90

Adaptor Cord Set required for 24VDC operation.

Commercial 0-10V Deco Wall Dimmer

Features:

- Single gang wall dimmer for 0-10V dimming of LED power supplies
- Sensitivity knob allows installer to set minimum and maximum light levels to meet customer preference for each application
- Control (2) 300W 12VDC or (1) 384W 24VDC 0-10V power supplies with one dimmer
- Wide paddle on/off switch with separate slide control, compatible with standard deco style switch plates
- Compatible with Tresco® Commercial Hardwire 0-10V power supplies
- Single product for single pole or 3-way wiring applications
- Indoor use only
- 2-Year warranty

Compatible with Tresco® Commercial Hardwire 0-10V Power Supplies.

Part #	Description	SLP
L-WLD-010V-W-120-277V-1	0-10V Deco Wall Dimmer 120-277V, Commercial Series	$182.40

120V LED Wall Dimmer

120V

Lutron Skylark Contour C·L™ Dimmer

150W

Lutron Skylark Contour C·L™ Dimmer 150W

- On/off rocker switch with a captive linear-slide dimmer for a standard designer wallplate opening
- Switch returns light to preset light level
- Offers more reliable dimming performance over standard dimmers
- HED™ technology with advanced dimming circuitry designed for compatibility with most high-efficiency light bulbs
- Low-end adjustment dial

Compatible with Tresco 12VDC & 24VDC Wall Dimmable Power Supplies

Part #	Description	SLP
L-CTCL-153P-WH-1	150W Lutron Skylark Contour C·L™ Dimmer w/out plate	$90.30

tresco technology

Swidget

Upgrade your space with a simple swap. Replace your existing switch or outlet with a technology-ready Swidget Device. Add your choice of Wi-Fi enabled inserts and control your lights, program schedules, create scenes, set automations and more with the Swidget App, or pair with Amazon Alexa or Google Home to enable voice commands. A future-proof versatile solution for a connected smart home.

SWIDGET® POWER TO LIVE SMART

Features:

- Future Proof - convenient Over-The-Air (OTA) upgrades allow you to expand capabilities right from your Swidget App
- Modular System - interchangeable inserts allow you to swap technologies as your needs change or new technology emerges
- Compatible with all Tresco® low voltage LED lighting
- More Power for High Current Devices - 20A Outlet offers the largest smart capacity on the market
- User Safe - devices are designed with tamper-resistant outlets and certified Class 2

Works with alexa | works with Google Assistant | Works with IFTTT | ETL Listed Intertek

CONTROL YOUR HOME FROM YOUR PHONE

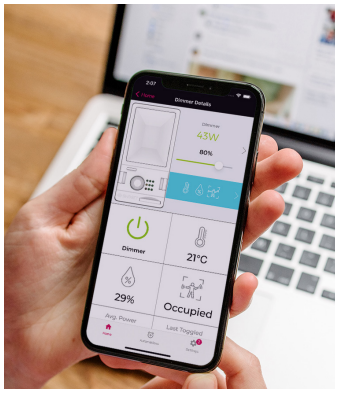

GET IT ON Google Play | Download on the App Store

Download the App

With knowledge and control at your fingertips, the Swidget App allows you to control your device while monitoring power consumption accurately and in real-time.

- Power On/Off your outlet or switch
- Program schedules, create scenes and set automations
- Monitor your energy consumption and set automatic notifications including when the power consumption is too high
- Connect inserts to trigger one another for a complete smart home system

Control your Swidget Wi-Fi connected inserts with your voice using Alexa, Google Assistant and IFTTT enabled devices.

Interchangeable Wi-Fi Enabled Inserts

Minimalistic Design

PLUG & PLAY TECHNOLOGY

Upgrading your space is as easy as 1-2-3.

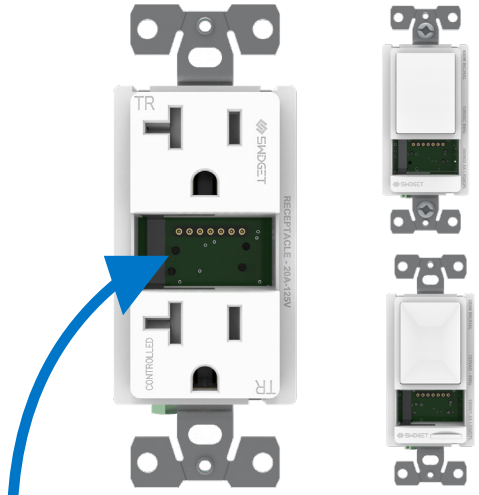

1. Select and Install Your Device

2. Choose Your Desired Insert

3. Control Your Smart Home

trescolighting.com | 1-800-227-1171 | cservice@trescolighting.com

REV-A-SHELF | tresco lighting

All product dimensions and specifications are subject to change without prior notice.

20A Outlet

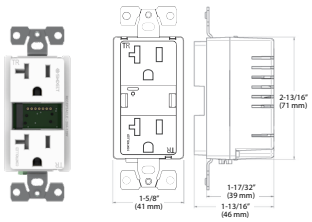

Part #	Description	SLP
L-R1020SWA-1	120VAC 2.4KW Swidget Outlet, w/o Insert, White	$104.40

Note: Electrician required for install. Works with all standard Rocker Switch plates (not included).

Standard Switch

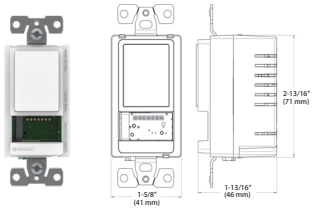

Part #	Description	SLP
L-S16001WA-1	120VAC 300W/600W Swidget Toggle Switch, w/o Insert, White	$92.65

Note: Electrician required for install. Works with all standard Rocker Switch plates (not included).

Dimmer Switch

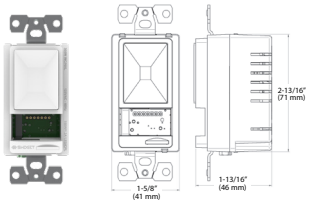

Part #	Description	SLP
L-SD3001WA-1	120VAC 150W/300W Swidget Dimmer Switch, w/o Insert, White	$110.05

Note: Electrician required for install. Works with all standard Rocker Switch plates (not included).

Wi-Fi Control Insert

Part #	Description	SLP
L-WI000UWA-1	Swidget Wi-Fi Control Insert, White	$50.00

Wi-Fi Control + Guide/Night Light Insert

Part #	Description	SLP
L-WI002UWA-1	Swidget Wi-Fi Control + Guide Light Insert, White	$67.30

Wi-Fi Control + Motion Sensor Insert

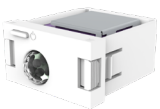

Part #	Description	SLP
L-WI004UWA-1	Swidget Wi-Fi Control + Motion Insert, White	$80.75

Wi-Fi Control + USB Charger Insert

Part #	Description	SLP
L-WI001UWA-1	Swidget Wi-Fi Control + USB Insert, White	$65.25

All product dimensions and specifications are subject to change without prior notice.

Install Accessories

Wire Channel

Features:

- Plastic channel for wire management
- Available in (3) finishes: Black, Brown and White
- Sold in 5' (1.5 m) lengths
- Easily cut to size in the field
- Durable adhesive mounting

Part #	Description	SLP
L-WM5-BL-1	5' (1.5 m) Wire Management Channel, Black	$13.90
L-WM5-BR-1	5' (1.5 m) Wire Management Channel, Brown	$13.90
L-WM5-WH-1	5' (1.5 m) Wire Management Channel, White	$13.90

12/24VDC Class 2 Wire and DIY Connectors

Part #	Description	SLP
L-16CL2-WH50-1	12/24VDC 50' (15 m) 16 AWG Class 2 Wire Roll, White	$82.30
L-LED-WCON-WH-1	12/24VDC DIY Barrel Connectors, White (1 bag of 10)	$74.20
L-LED-WCON-BL-1	12/24VDC DIY Barrel Connectors, Black (1 bag of 10)	$74.20

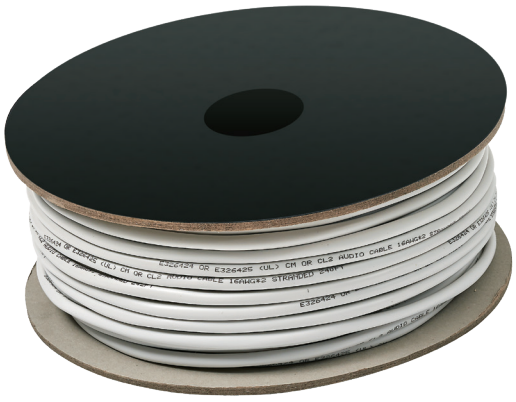

Wire rated for low-voltage in-wall use

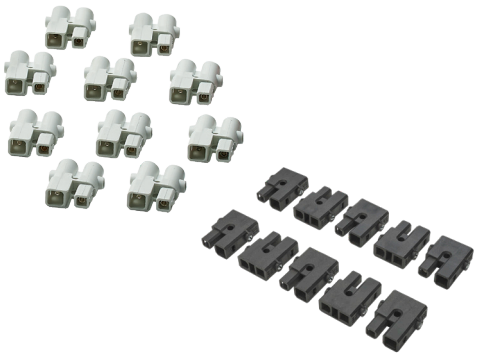

AMP® Connector and Extractor

Part #	Description	SLP
L-PINEXT-1	AMP® Connector Extraction Tool	$45.95
L-MALE-AMP-10-1	AMP® w for Light Fixture (box of 10)	$12.60

Pin Extractor safely removes AMP® Connectors.

VHB Tape

Part #	Description	SLP
L-VHBTPE-1134-1	7/16" (11 mm) x 111-1/2' (34 m) VHB Adhesive Tape Roll	$106.85

Automotive grade VHB tape can be used to mount all fixtures or as a base layer for mounting Tape LED products.

Starter/Extension Cord

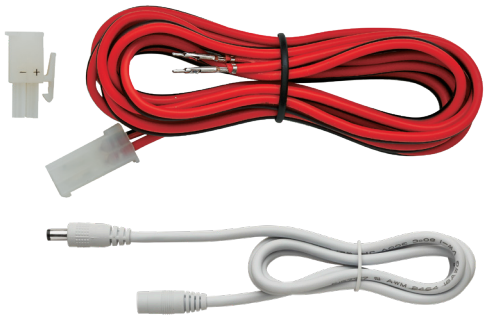

Features:

Low-voltage wire

Used to extend the starter leads for any Tresco® lights

7 lengths (12VDC) 3 lengths (24VDC)

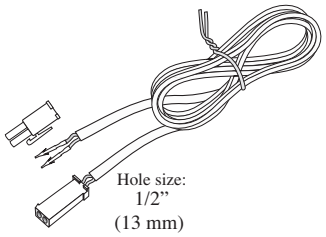

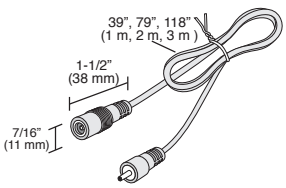

12VDC

Part #	Description	SLP
L-LED-LINKD-8-1	12VDC 8 cm (3") Starter/Link/Extension Cord	$4.00
L-LED-LINKD-15-1	12VDC 15 cm (6") Starter/Link/Extension Cord	$4.65
L-LED-LINKD-25-1	12VDC 25 cm (10") Starter/Link/Extension Cord	$7.00
L-LED-LINKD-60-1	12VDC 60 cm (24") Starter/Link/Extension Cord	$7.50
L-LED-LINKD-120-1	12VDC 120 cm (48") Starter/Link/Extension Cord	$10.40
L-LED-LINKD-180-1	12VDC 180 cm (72") Starter/Link/Extension Cord	$12.10
L-LED-LINKD-245-1	12VDC 245 cm (96") Starter/Link/Extension Cord	$14.35

24VDC

Part #	Description	SLP
L-24BBEXT-1M-1	24VDC 1 m (39") ML/FML Barrel Extension, White	$5.15
L-24BBEXT-2M-1	24VDC 2 m (79") ML/FML Barrel Extension, White	$8.90
L-24BBEXT-3M-1	24VDC 3 m (119") ML/FML Barrel Extension, White	$11.65

Product Index Guide

3071-18-**-52 311
3071-20-**-52 311
3071-24-**-52 311
3071-28-**-52 311
3072-18-**-52 311
3072-20-**-52 311
3072-24-**-52 311
3072-28-**-52 311
3073-18-**-531 311
3073-18-**-536 311
3073-20-**-531 311
3073-20-**-536 311
3150-11BR 227
3150-11CR 227
3150-11ORB 227
3150-11SN 227
3150-16BR 227
3150-16CR 227
3150-16ORB 227
3150-16SN 227
3150-18BR 227
3150-18CR 227
3150-18ORB 227
3150-18SN 227
3250BR 227
3250CR 227
3250ORB 227
3250SN 227
3450-11CR 227
3450-11ORB 227
3450-11SN 227
3471-24-**-52 311
3471-28-**-52 311
3471-32-**-52 311
3472-24-**-52 311
3472-28-**-52 311
3472-32-**-52 311
4/4/6022 335
4231-08-52 119
4231-11-52 119
4231-14-52 119
4231-20-52 119
4235-14-5 119
4235-20-5 ..... 119, 173
4265-22-52 173
432-BF-3C 133
432-BF-6C 133
432-BF-9C 133
432-BFBBSC-3C 133
432-BFBBSC-6C 133
432-BFSC-3C 134
432-BFSC-6C 134
432-BFSC-9C 134
432-TF39-6C 164
432-TF45-6C 164
432-VF26SC-3 251
432-VF26SC-6 251
432-VF30SC-3 251
432-VF30SC-6 251
432-WF-3C 225
432-WF-6C 225
432-WF33-3C 225
432-WF33-6C 225
432-WF36-3C 225
432-WF36-6C 225
432-WF39-3C 225
432-WF39-6C 225
432-WF42-3C 225
432-WF42-6C 225
432-WFBBSC30-3C 225
432-WFBBSC30-6C 225
432-WFBBSC33-3C 225
432-WFBBSC33-6C 225
432-WFBBSC36-3C 225
432-WFBBSC36-6C 225
432-WFBBSC39-3C 225
432-WFBBSC39-6C 225
432-WFBBSC42-3C 225
432-WFBBSC42-6C 225
432TB-BFBBSC-3C 132
432TB-BFBBSC-6C 132
438-BC-3C 135
438-BC-6C 135
438-BCSC-3C 135
438-BCSC-6C 135
441-12VSBSC-1 ..... 104, 106, 238
441-15VSBSC-1 ..... 104, 238
444-BCSC-8C 124
445-VBOSC-8C 232
445-VCG20SC-8 252
445-VCG25SC-8 252
447-BCSC-5C 143
447-BCSC-6C 143
447-BCSC-8C 143
447-BCSC-9C 143
448-08SC-SRI-1 ..... 137, 142
448-11SC-SRI-1 142
448-BBSCWC-5C 217
448-BBSCWC-6C 217
448-BBSCWC-8C 217
448-BBSCWC-9C 217
448-BBSCWC36-5C 217
448-BBSCWC36-8C 217
448-BC-11C 136, 137
448-BC-14C 136, 137
448-BC-5C 136, 137
448-BC-6C 136, 137
448-BC-8C 136, 137
448-BC19SC-5C 141, 142
448-BC19SC-8C 141, 142
448-BCBBSC-5C 136, 137
448-BCBBSC-8C 136, 137
448-BCSC-11C 141, 142
448-BCSC-14C 141, 142
448-BCSC-5C 141, 142
448-BCSC-6C 141, 142
448-BCSC-8C 141, 142
448-BCSC-9C 141, 142
448-BCSCSD-5C 141, 142
448-BCSCSD-8C 141, 142
448-BDDSC-11C 141, 142
448-BDDSC-5C 141, 142
448-BDDSC-8C 141, 142
448-BSKS-3C 139
448-BSKT-3C 139
448-HP-523C 217
448-SR11-1 137
448-SR8-1 137
448-TPF43-11-1 163
448-TPF43-14-1 163
448-TPF43-5-1 163
448-TPF43-8-1 163
448-TPF51-11-1 163
448-TPF51-14-1 163
448-TPF51-5-1 163
448-TPF51-8-1 163
448-TPF58-11-1 163
448-TPF58-14-1 163
448-TPF58-5-1 163
448-TPF58-8-1 163
448-VC20SC-8 253
448-VC25SC-8 253
448-WC-5C 217
448-WC-8C 217
448KB-BCSC-11C 141, 142
448KB-BCSC-5C 141, 142
448KB-BCSC-6C 141, 142
448KB-BCSC-8C 141, 142
448KB-BCSC-9C 141
448OXO-BCSC-8C 141, 142
448PTH-BCSC-6C 142
448PTH-BCSC-8C 142
448SW-BCSC-5C 138
448SW-BCSC-8C 138
448UT-BCSC-11C 142
448UT-BCSC-5C 142
448UT-BCSC-6C 142
448UT-BCSC-8C 142
448UT-BCSC-9C 142
449-BCSC-10C 145
449-BCSC-5C 145
449-BCSC-7C 145
449-BCSC-8C 145
449KB-BCSC-8C 145
449UT-BCSC-10C 145
449UT-BCSC-5C 145
449UT-BCSC-7C 145
449UT-BCSC-8C 145
486-30VSBSC-BM-1 ..... 105, 231
486-30VSBSC-SM-1 ..... 105, 231
48KB-BCSC-9C 142
4ADI-36-1 178
4ASR-15 221
4ASR-15BIN-10 221
4ASR-18 221
4ASR-18BIN-10 221
4ASR-21 221
4ASR-21BIN-10 221
4ASR-25STD-20 221
4ASR-31STD-20 221
4ASR-37STD-20 221
4B-10-8 336
4B-7-8 336
4BM1-04-52 336
4BM1-18-52 336
4BS-10-8 336
4BS-7-8 336
4CDI-18-KCUP-1 203
4CDI-24-KCUP-1 203
4CDS-18SC-1 116
4CDS-24SC-1 116
4CW2-18SC-1 115

4CW2-24SC-1 ... 115
4DMCB-15 ... 118
4DMCB-15P ... 118
4DMCB-18 ... 118
4DMCB-18P ... 118
4DMKB-18-1 ... 122
4DPB-2421 ... 201
4DPB-3021 ... 201
4DPB-3921 ... 201
4DPBG-2421-1 ... 201
4DPBG-3021-1 ... 201
4DPBG-3921-1 ... 201
4DPS-2421 ... 201
4DPS-3021 ... 201
4DPS-3921 ... 201
4DPS-PEG-4 ... 201
4DPS-PEG-WN-4 ... 201
4DPS-WN-2421 ... 201
4DPS-WN-3021 ... 201
4DPS-WN-3921 ... 201
4FSCO-18SC-1 ... 125
4FSCO-24SC-1 ... 125
4FWI-16SS-1 ... 197
4HD-15-1 ... 236
4HDBM2-04-52 ... 336
4KCB-18HSC-1 ... 193
4KCB-21HSC-1 ... 193
4KCB-24HSC-1 ... 193
4KCB-419HFLSC-1 ... 193
4OXO-18-1 ... 180
4OXO-24-1 ... 180
4PDI-36 ... 184
4PIL-18SC-2 ... 128, 160, 161
4PIL-18SC-3 ... 128, 160, 161
4PIL-18SC-SV-2 ... 128, 160, 161
4PIL-18SC-SV-3 ... 128, 160, 161
4PIL-20-088-1 ... 129, 161
4PIL-20-088-10 ... 129, 161
4PIL-20-113-1 ... 129, 161
4PIL-20-113-10 ... 129, 161
4PIL-20-238-1 ... 129, 161
4PIL-21-1 ... 161
4PIL-21-10 ... 161
4PIL-21-SV-1 ... 161
4PIL-21-SV-10 ... 161
4PIL-24SC-2 ... 128, 160, 161
4PIL-24SC-3 ... 128, 160, 161
4PIL-24SC-SV-2 ... 128, 160, 161
4PIL-24SC-SV-3 ... 128, 160, 161
4PIL-27-088-1 ... 129, 161
4PIL-27-113-1 ... 129, 161
4PIL-27-238-1 ... 129, 161
4PIL-27-238-10 ... 129, 161
4PIL-54-088-1 ... 129, 161
4PIL-54-088-10 ... 129, 161
4PIL-54-113-1 ... 129, 161
4PIL-54-113-10 ... 129, 161
4PIL-54-238-1 ... 129, 161
4PIL-54-238-10 ... 129, 161
4PIL-BUTTON-1 ... 129, 161
4PIL-BUTTON-12 ... 129, 161
4PIL20-18SC-2 ... 129, 161
4PIL20-24SC-2 ... 129, 161
4PIL27-18SC-3 ... 129, 161
4PIL27-24SC-3 ... 129, 161
4PUT-18SC-1128, 129, 130, 160, 161
4PUT-24SC-1128, 129, 130, 160, 161
4SB-10-1 ... 338
4SB-10-10 ... 338
4SB-7-1 ... 338
4SB-7-10 ... 338
4SBPT-18-1 ... 81
4SBS-10-1 ... 338
4SBS-10-10 ... 338
4SBS-7-1 ... 338
4SBS-7-10 ... 338
4SBSU-15 ... 97, 117
4SBSU-18 ... 97, 117
4SBSU-21 ... 97, 117
4SDI-18 ... 202
4SDI-18T-1 ... 179
4SDI-24 ... 202
4SDI-24T-1 ... 179
4SDI-36-1 ... 202
4SDI-WN-18-1 ... 202
4SDI-WN-24-1 ... 202
4SH-15-1 ... 235
4SOWC-8-1 ... 58, 98, 242
4SPBD-15 ... 97, 117
4SPBD-18 ... 97, 117
4SR-15 ... 220
4SR-18 ... 220
4SR-21 ... 220
4TMBIN-15-6 ... 31
4TMBIN-17-6 ... 31
4TMBIN-6 ... 31
4TT-2133-1 ... 194
4UH-BC-9C ... 123
4VCOS-22-1 ... 234
4VHTM-1520DM-1 ... 244
4VLWCSC-1527DM-2 ... 51
4VLWCSC-1535DM-1 ... 51
4VLWCSC-1550DM-1 ... 51
4VLWCSC-1835DM-2 ... 51
4VLWCSC-2135DM-2 ... 51
4VLWCSC-2150DM-2 ... 51
4VLWCSC-2432DM-2 ... 51
4VOD-18FLSC-1 ... 233
4VOD-18SC-1 ... 233
4VR-12-1 ... 121, 239
4VR-15-1 ... 121, 239
4VR-18-1 ... 121
4WBDP18-25 ... 120
4WBP18-25-KIT ... 120
4WBSP18-25 ... 120
4WC-15DM1 ... 44
4WC-18DM2 ... 44
4WC-24DM2-SC ... 44
4WC-TOKIT-12 ... 45, 49, 59
4WC-TOKIT-15 ... 45, 49, 59
4WC-TOKIT-18 ... 45, 49, 59
4WC-WN-1550DM1-SC ... 45
4WC-WN-15DM1-SC ... 45
4WC-WN-18DM2-SC ... 45
4WC-WN-2150DM2-SC ... 45
4WCBM-1550DM-1 ... 47
4WCBM-15DM-1 ... 47
4WCBM-18DM-2 ... 47
4WCBM-2150DM-2 ... 47
4WCBM-2430DM-2 ... 47
4WCCB-18HSC-1 ... 192
4WCCB-419HFLSC-1 ... 192
4WCDB-18HFLSC-1 ... 187
4WCDB-18HFLSC-1-USB ... 187
4WCDB-18HSC-1 ... 187
4WCSC-1527DM-2 ... 49
4WCSC-1532DM16-1 ... 49, 242
4WCSC-1535DM-1 ... 49
4WCSC-1535DM19-1 ... 49, 242
4WCSC-1550DM-1 ... 49
4WCSC-1835CK**-2 ... 29, 49
4WCSC-1835DM-2 ... 49
4WCSC-1835DMND-2 ... 49
4WCSC-2135DM-2 ... 49
4WCSC-2150DM-2 ... 49
4WCSC-CK**-1 ... 29, 49
4WCSD-1535DM-1 ... 49
4WCSD-1550DM-1 ... 49
4WCSD-1835DM-2 ... 49
4WCSD-2150DM-2 ... 49
4WCT-1 ... 195
4WCT-15SH-1 ... 198
4WCT-18SH-1 ... 198
4WCT-1SH ... 195
4WCT-21SH-1 ... 198
4WCT-24SH-1 ... 198
4WCT-3 ... 195
4WCT-3SH ... 195
4WCT-WN-1SH ... 195
4WCT-WN-3SH ... 195
4WCTM-12BBSCDM1 ... 54
4WCTM-12CK**SCDM1 ... 29, 54
4WCTM-12DM1 ... 54
4WCTM-12DM1-162 ... 54
4WCTM-12DM1-175 ... 54
4WCTM-12DM1-343-FL ... 54
4WCTM-1516DM-1 ... 54
4WCTM-1550BBSCDM-1 ... 54
4WCTM-1550DM-1 ... 54
4WCTM-1550DM1-343-FL ... 54
4WCTM-15BBSCDM2 ... 54
4WCTM-15DM2 ... 54
4WCTM-15DM2-162 ... 54
4WCTM-15DM2-343-FL ... 54
4WCTM-1816DM-1 ... 54
4WCTM-1818DM-1-162 ... 54
4WCTM-1850DM-1 ... 54
4WCTM-1850DM2-419-FL ... 54
4WCTM-18BBSCDM2 ... 54
4WCTM-18CK**SCDM2 ... 29, 54
4WCTM-18DM2 ... 54
4WCTM-18DM2-162 ... 54
4WCTM-18DM2-175 ... 54
4WCTM-18DM2-419-FL ... 54
4WCTM-2150BBSCDM-2 ... 54
4WCTM-2150DM-2 ... 54
4WCTM-21DM2 ... 54
4WCTM-21DM2-162 ... 54
4WCTM-21DM2-495-FL ... 54
4WCTM-2450BBSCDM-2 ... 54
4WCTM-24DM2 ... 54
4WCTM-24DM2-162 ... 54
4WCTM-27-4 ... 54
4WCTM-27-4-597-FL ... 54
4WCTM-RM-1835DM-1 ... 55
4WCTM-RM-1850DM-1 ... 55
4WCTM-RM-2135DM-2 ... 55
4WCTM-RM-2150DM-2 ... 55
4WCTM-SP-KIT ... 54
4WCTM-WNRM-1850DM-1 ... 55
4WCTM-WNRM-2150DM-2 ... 55
4WCWM-2435DMSC-2 ... 23
4WCWM-2435DMSC-4 ... 23
4WCWM-2450DMSC-2 ... 23
4WCWM-2450DMSC-4 ... 23
4WD-22-1 ... 205
4WD-22SH-1 ... 205
4WD-22SH-WN-1 ... 205

4WDB-1219SC-1 126
4WDB-12SC-1 126
4WDB-15SC-1 126
4WDB-18SC-1 126
4WDB-21SC-1 126
4WDB4-18SC-1 127
4WDB4-24SC-1 127
4WDB4-PIL-18SC-1128, 129, 160, 161
4WDB4-PIL-24SC-1128, 129, 160, 161
4WDB7-18SC-1 127
4WDB7-24SC-1 127
4WDB7-PIL-18SC-1128, 129, 160, 161
4WDB7-PIL-24SC-1128, 129, 160, 161
4WDIV-24-1 182
4WDIV-24SH-1 181
4WDIV-30-1 182
4WDIV-30SH-1 181
4WDIV-36-1 182
4WDIV-36SH-1 181
4WDKB-1 204
4WDKB-WN-1 204
4WDP18-45 165
4WDP18-51 165
4WDP18-57* 165
4WDR-24H-1 183
4WDR-24HSC-1 183
4WDR-30H-1 183
4WDR-30HSC-1 183
4WFR-15-1 223
4WFR-18-1 223
4WFR-21-1 223
4WH-RM-15DM-1 250
4WH-VCSC-21DM-1 ..... 243, 296
4WHOX-24DMSC-1 230
4WHOX-24FHDMSC-1 230
4WKB-1 205
4WLS001-10-B52 322
4WLS001-18-52 322
4WLS001-18-B52 322
4WLS001-20-52 322
4WLS001-20-B52 322
4WLS001-28-52 322
4WLS001-28-B52 322
4WLS001-32-52 322
4WLS001-32-B52 322
4WLS072-18-52 322
4WLS072-20-52 322
4WLS072-22-52 322
4WLS072-28-52 322
4WLS072-32-52 322
4WLS073-18-536 322
4WLS073-20-536 322
4WLS201-20-52 322
4WLS201-20-BS52 322
4WLS201-22-BS52 322
4WLS201-31-52 322
4WLS201-31-BS52 322
4WLS272-20-52 322
4WLS272-22-52 322
4WLS272-31-52 322
4WLS273-20-536 322
4WLS401-24-52 323
4WLS401-28-52 323
4WLS401-28-BS52 323
4WLS401-32-52 323
4WLS401-32-BS52 323
4WLS472-24-52 323
4WLS472-28-52 323
4WLS472-32-52 323
4WLS882-32-570 ..... 77, 323
4WLS882-35-570 ..... 77, 323
4WLS882-38-570 ..... 77, 323
4WLS901-24-52 323
4WLS901-28-52 323
4WLS901-31-52 323
4WLS942-2433-52 323
4WLS942-24P-52 323
4WLS942-28P-52 323
4WLS942-31P-52 323
4WP18-45-KIT 165
4WP18-51-KIT 165
4WP18-57-KIT 165
4WSP18-45 165
4WSP18-51 165
4WSP18-57* 165
4WTCD-15H-1 189
4WTCD-15HSC-1 189
4WTCD-18H-1 189
4WTCD-18H-KCUP-1 191
4WTCD-18HSC-1 189
4WTCD-18HSC-KCUP-1 191
4WTCD-21H-1 189
4WTCD-21HSC-1 189
4WTCD-24H-1 189
4WTCD-24HSC-1 189
4WTCD-30H-1 190
4WTCD-30HSC-1 190
4WTCD-343HFL-1 189
4WTCD-343HFLSC-1 189
4WTCD-36H-1 190
4WTCD-36HSC-1 190
4WTCD-419HFL-1 189
4WTCD-419HFLSC-1 189
4WTCD-495HFL-1 189
4WTCD-495HFLSC-1 189
4WTCD-572HFL-1 189
4WTCD-572HFLSC-1 189
4WTCD-724HFL-1 190
4WTCD-724HFLSC-1 190
4WTCD-876HFL-1 190
4WTCD-876HFLSC-1 190
4WTCDD-30HSC-1 186
4WTCDD-36HSC-1 186
4WTCDD-724HFLSC-1 186
4WTCDD-876HFLSC-1 186
4WTMD-24HSC-1 185
4WUT-1 197
4WUT-15SH-1 199
4WUT-18SH-1 199
4WUT-1SH 197
4WUT-21SH-1 199
4WUT-24SH-1 199
4WUT-3 197
4WUT-3SH 197
4WUT-WN-1SH 197
4WUT-WN-3SH 197
5149-1527DM-211 37
5149-1527DM-217 37
5149-1550DM-111 37
5149-1550DM-117 37
5149-15DM-111 37
5149-15DM-117 37
5149-15DM18-111 ..... 37, 241
5149-15DM18-117 ..... 37, 241
5149-18DM-211 37
5149-18DM-217 37
5149-2150DM-211 37
5149-2150DM-217 37
5190-15RM-117 248
5190-LINER 248
5258-09-MP 167
5258-14-MP 167
5273-09-MP 167
5273-14-MP 167
53-401-32BSFOG-1 331
53-401-32BSGR-1 331
53-401-32BSMP-1 331
5322-BCSC-11-** 146
5322-BCSC-11-GR 147
5322-BCSC-11-MP 147
5322-BCSC-5-** 146
5322-BCSC-5-GR 147
5322-BCSC-5-MP 147
5322-BCSC-6-** 146
5322-BCSC-6-FOG 146, 147
5322-BCSC-6-GR 147
5322-BCSC-6-MP 147
5322-BCSC-8-** 146
5322-BCSC-8-GR 147
5322-BCSC-8-MP 147
5322-BCSC-9-** 146
5322-BCSC-9-FOG 146, 147
5322-BCSC-9-GR 147
5322-BCSC-9-MP 147
5322KB-BCSC- 6-GR 147
5322KB-BCSC-11-** 146
5322KB-BCSC-11-GR 147
5322KB-BCSC-11-MP 147
5322KB-BCSC-6-** 146
5322KB-BCSC-6-FOG 146, 147
5322KB-BCSC-6-MP 147
5322KB-BCSC-8-** 146
5322KB-BCSC-8-GR 147
5322KB-BCSC-8-MP 147
5322KB-BCSC-9-** 146
5322KB-BCSC-9-GR 147
5322KB-BCSC-9-MP 147
5322UT-BCSC-6-** 146
5322UT-BCSC-6-FOG 146, 147
5322UT-BCSC-6-GR 147
5322UT-BCSC-6-MP 147
5322UT-BCSC-8-** 146
5322UT-BCSC-8-GR 147
5322UT-BCSC-8-MP 147
5330-12BCSC-** 152, 153
5330-15BCSC-** 152, 153
5330-21BCSC-** 152, 153
5330-33BCSC-** 152, 153
5330-33BCSCFL-FOG 152, 153
5343-08-** 169
5343-10-** 169
5343-13-** 169
5343-16-** 169
5343-19-** 169
5345-DM-KIT-1 39
53472-32FOG-1 331
53472-32GR-1 331
53472-32MP-1 331
5349-1527DM-2 39
5349-1527DM-217 39
5349-1550DM-1 39
5349-1550DM-117 39
5349-15CK**-1 ..... 29, 39
5349-15DM-1 39

5349-15DM-117....39
5349-15DM18-1....39
5349-15DM18-117....39
5349-18CK**-2....29, 39
5349-18DM-2....39
5349-18DM-217....39
5349-2150DM-2....39
5349-2150DM-217....39
5350-08-**....169
5350-10-**....169
5350-13-**....169
5350-16-**....169
5350-19-**....169
5358-08-**....169
5358-10-**....169
5358-13-**....169
5358-16-**....169
5358-19-**....169
5365-08-FOG....222
5365-10-FOG....222
5365-14-FOG....222
5371-15-**-L....65
5371-15-**-R....65
5371-15-FOG-L....63
5371-15-FOG-R....63
5371-18-**-L....65
5371-18-**-R....65
5371-18-FOG-L....63
5371-18-FOG-R....63
5371-21-**-L....65
5371-21-**-R....65
5371-21-FOG-L....63
5371-21-FOG-R....63
5371-SC-KIT-1....63, 65
5372-15-**-L....65
5372-15-**-R....65
5372-15-FOG-L....63
5372-15-FOG-R....63
5372-18-**-L....65
5372-18-**-R....65
5372-18-FOG-L....63
5372-18-FOG-R....63
5372-21-**-L....65
5372-21-**-R....65
5372-21-FOG-L....63
5372-21-FOG-R....63
5372-SC-KIT-2....63, 65
5373-08-**....169
5373-10-**....169
5373-13-**....169
5373-16-**....169
5373-19-**....169
5374-18FL-FOG....166
5374-24FL-FOG....166
5375-40WR-1CR....148
5386-30BCSC-**....101
5386-30BCSCFL-FOG....101
5386-33BCSC-**....101
5386-33BCSCFL-FOG....101
53PSP-15SC-**....73
53PSP-15SC-FOG....73
53PSP-18SC-**....73
53PSP3-15SC-**....73
53PSP3-18SC-**....73
53TM-1835GSCDM2-FL....42
53TM-1850GSCDM2-FL....42
53TM-18GSCDM3-FL....42
53TM-24GSCDM4-FL....42
53TMVH-24SCDM-2-FL....245
53WC-1527SCDM-212....41
53WC-1527SCDM-213....41
53WC-1527SCDM-217....41
53WC-1535SCDM-112....41
53WC-1535SCDM-113....41
53WC-1535SCDM-117....41
53WC-1550SCDM-112....41
53WC-1550SCDM-113....41
53WC-1550SCDM-117....41
53WC-1835SCDM-212....41
53WC-1835SCDM-213....41
53WC-1835SCDM-217....41
53WC-2150SCDM-212....41
53WC-2150SCDM-213....41
53WC-2150SCDM-217....41
548-06CR-1....111
548-BC-8C....149
548WB-0919CR-1....96
563-32....80
563-32 C....80
563-47....80
563-47 C....80
563-51-C....80
565-10-52....222
565-14-52....222
565-8-52....222
57-EXTEND-1....169, 171
5707-15CR....75
5707-18CR....75
5708-15CR....218
5730-12CR....150, 151
5730-15CR....150, 151
5730-21CR....150, 151
5730-33CR....150, 151
5743-04-CR-1....171
5743-08-CR-1....171
5743-10-CR-1....171
5743-14-CR-1....171
5743-16-CR-1....171
5743-20-CR-1....171
5750-04-CR-1....171
5750-08-CR-1....171
5750-10-CR-1....171
5750-14-CR-1....171
5750-16-CR-1....171
5750-20-CR-1....171
5758-04-CR-1....171
5758-08-CR-1....171
5758-10-CR-1....171
5758-14-CR-1....171
5758-16-CR-1....171
5758-20-CR-1....171
5773-04-CR-1....171
5773-08-CR-1....171
5773-10-CR-1....171
5773-14-CR-1....171
5773-16-CR-1....171
5773-20-CR-1....171
5786-30CR....103
5786-33CR....103
5789CR....151
582-18-LMP....74
582-18-RMP....74
587-12-***....66
587-12-LMP....66
587-12-RMP....66
587-15-***....66
587-15-LMP....66
587-15-RMP....66
587-18-***....66
587-18-LMP....66
587-18-RMP....66
5881-33CR-1....77, 332
596-10CR-52....110, 219
597-12-10....110, 219
597-12-52....110, 219
597-12CR-10....110, 219
597-12CR-52....110, 219
599-18-LMP....78
599-18-RMP....78
5BBSC-WMDM24-C....43
5BBSC-WMDM24-W....43
5CC-915S-11-1....83
5CC-915S-13-1....83
5CC-915S-18-1....83
5CCSO12-11-1....82
5CCSO12-13-1....82
5CCSO12-18-1....82
5CHB-LINER....249, 298
5CW2-1222-CR....114
5CW2-1222SC-CR....114
5CW2-2122-CR....114
5CW2-2122SC-CR....114
5DCD-1-CR....201
5DCH-2-1-CR....201
5DLD-1-CR....201
5KCUP-432-1....225
5LB-1230OGMP-113....35
5LB-1230OGWN-113....35
5LB-1230SSBL-118....35
5LB-1535OGMP-113....35
5LB-1535OGWN-113....35
5LB-1535SSBL-118....35
5LB-1550OGWN-113....35
5LB-1550SSBL-118....35
5LB-1835OGMP-213....35
5LB-1835OGWN-213....35
5LB-1835SSBL-218....35
5LB-1850OGMP-213....35
5LB-1850OGWN-213....35
5LB-1850SSBL-218....35
5LB-2435OGWN-413....35
5LB-TOKIT-12....35, 59
5LB-TOKIT-15....35, 59
5LB-TOKIT-18....35, 59
5LBSD-KIT-1....35
5LSF018-8CR....332
5LSF018-CR....332
5LSF020-8CR....332
5LSF020-CR....332
5LSF028-8CR....332
5LSF028-CR....332
5LSF032-8CR....332
5LSF032-CR....332
5LSF424-8CR....332
5LSF424-CR....332
5LSF428-8CR....332
5LSF428-CR....332
5LSF432-8CR....332
5LSF432-CR....332
5PD-24CRN....228
5PD-24FOG....228
5PD-36CRN....228
5PD-36FOG....228
5PSP-15-CR....71

5PSP-15SC-CR....71
5PSP-18-CR....71
5PSP-18SC-CR....71
5PSP3-15SC-CR....71
5PSP3-18SC-CR....71
5SBWC-815S-1....57, 99, 256
5SBWCC-8S-1....99, 256
5SOWC-8-1....98
5WB-DMKIT....
57, 83, 99, 113, 114, 256
5WB1-1220CR-1....113
5WB1-1222CR-1....113
5WB1-1520CR-1....113
5WB1-1522CR-1....113
5WB1-1820CR-1....113
5WB1-1822CR-1....113
5WB1-2120CR-1....113
5WB1-2122CR-1....113
5WB1-2422CR-1....113
5WB2-0922CR-1....113
5WB2-1222CR-1....113
5WB2-1522CR-1....113
5WB2-1822CR-1....113
5WB2-2122CR-1....113
5WB2-2422CR-1....113
5WBR-18CR-1....159
5WBR-18CR-5....159
5WBR-24CR-1....159
5WBR-24CR-5....159
5WBR-30CR-1....159
5WBR-30CR-5....159
5WCOR-18CR-1....158
5WCOR-24CR-1....158
5WCOR-30CR-1....158
5WSCR-18CR-1....159
5WSCR-18CR-5....159
5WSCR-24CR-1....159
5WSCR-24CR-5....159
5WSCR-30CR-1....159
5WSCR-30CR-5....159
5WU1-5W1-1....215
5WU2-3N1-1....215
5WU2-5W1-1....215
5WU2-9N3-1....215
5WU2-9W2-1....215
6000-05-7200-2-52....335
6000-07P-52....335
6000-37-52....335
6012-18-**-52....314
6012-20-**-52....314
6012-24-**-52....314
6012-28-**-52....314
6013-18-**-526....314
6013-20-**-526....314
6020-04P-4....335
6020-04P-426....335
6020-04P-52....335
6020-96-3100-2....335
6020-96-3600-2....335
6022-04-426....335
6022-04-52....335
6022-04-52-526....335
6065-16-**-52....175
6065-18-**-52....175
6071-16-**-52....314
6071-18-**-52....314
6071-20-**-52....314
6071-24-**-52....314
6071-28-**-52....314
6071-32-**-52....314
6072-04-52....335
6072-16-**-52....314
6072-18-**-52....314
6072-20-**-52....314
6072-24-**-52....314
6072-28-**-52....314
6072-32-**-52....314
6073-04-536....335
6073-18-**-536....314
6073-20-**-536....314
6221-20-**-52....313
6221-22-**-52....313
6230-MB-11-1....87, 119
6232-08-**-52....87
6232-14-**-52....87
6232-20-**-52....87
6235-08-**-52....87
6235-14-**-52....87, 175
6235-20-**-52....87, 174
6260-38-1....337
6265-04-52....337
6265-22-**-52....174
6271-20-**-52....313
6271-22-**-52....313
6272-04-52....337
6272-20-**-52....313
6272-22-**-52....313
6273-20-**-536....313
6273-22-**-536....313
6360-05-7008-26-52....337
6370-96-7008-26-52....337
6421-18-**-52....313
6421-24-**-52....313
6421-28-**-52....313
6421-32-**-52....313
6470-96-4008-26-52....337
6471-18-**-52....313
6471-24-**-52....313
6471-28-**-52....313
6471-32-**-52....313
6472-18-**-52....313
6472-24-**-52....313
6472-28-**-52....313
6472-32-**-52....313
65*1-10-4....93
65*1-10-5....93
65*1-11-4....93
65*1-11-5....93
65*1-13-4....93
65*1-13-5....93
65*1-14-4....93
65*1-14-5....93
65*1-16-4....93
65*1-16-5....93
65*1-19-4....93
65*1-19-5....93
65*1-22-4....93
65*1-22-5....93
65*1-25-4....93
65*1-25-5....93
65*1-28-4....93
65*1-28-5....93
65*1-31-4....93
65*1-31-5....93
6541-36-**-4....91
6541-36-**-50....91
6541-36-**-52....91
6541-36-**-ETH....91
6541-36SC-11-50....92
6541-36SC-15-50....92
6542-11-**-4....91
6542-11-**-52....91
6542-14-**-4....91
6542-14-**-52....91
6542-97-**-4....91
6542-ETH-**-10....91
6551-36-**-50....89
6551-36-**-52....89
6551-36-**-ETH....89
6551-36SC-11-50....92
6551-36SC-15-50....92
6552-94-0220-4....95
6552-95-0220-4....95
6552-97-**-4....89
6552-ETH-**-10....89
6552-ETH-10....95
6561-11-**-4....90
6561-14-**-4....90
6562-11-**-52....90
6562-14-**-52....90
6571-36-**-4....89, 223
6571-60-52....89, 223
6571-61-52....89, 223
6571-72-**-4....89, 223
6572-11-**-4....90
6572-11-**-52....90
6572-14-**-4....90
6572-14-**-52....90
6581-11-**-4....90
6581-14-**-4....90
6581-25SC-52....92
6581-28SC-52....92
6581-31SC-52....92
6591-11-**-4....90
6591-13-6....93
6591-14-**-4....90
6591-14-6....93
6591-16-6....93
6591-19-6....93
6591-22-6....93
6591-25-6....93
6591-28-6....93
6591-31-6....93
6621-16-**-52....314
6621-18-**-52....314
6621-20-**-52....314
6621-24-**-52....314
6621-28-**-52....314
6621-32-**-52....314
6700-61-6....31
6841-04-52....339
6842-04-570....339
6842-31-**-570....77, 315
6842-33-**-570....77, 315
6842-39-**-570....77, 315
6881-31-**-52....77, 315
6881-33-**-52....77, 315
6881-39-**-52....77, 315
6882-04-52....339
6882-1008-04-52....77, 315, 339
6882-31-**-570....77, 315
6882-33-**-570....77, 315
6882-39-**-570....77, 315
6940-04-28P-4....337
6940-04-28P-52....337
6942-04-28-52....337
6942-24-**-52....314
6942-28-**-52....314

6950-07P-52 337
7012-20-**-52 313
7013-20-**-526 313
8-010212-14 ..... 56, 240, 297
8-010314-15 ..... 56, 240, 297
8-010412-15 ..... 56, 240, 297
8-060-11SS 59
8-060-15SS 59
8-700411-20 ..... 56, 240
8-785-30-2SS 57
8-785-30-DM2SS 57
BC45 73
BDC-200-** 209
BDC-200-20 209
BDC24-** 209
BDC24-20 209
BM1-04-52 ..... 313, 314, 336
BM1-18-52 ..... 313, 336
BM1-VL-04-52 ..... 311, 336
BM1-VL-4-LHUB-12 336
BM1-VL-4-SHUB-12 336
BRC-12CR 275
BRC-12MB 275
BRC-12NS-CR 278
BRC-14CR 275
BRC-14MB 275
BRCSL-14NS-CR-1 276
CA-LGORG-1 303
CA-NECKLACE-1 303
CA-SMORG-1 303
CB-181207CR-* 262
CB-181211CR-* 262
CB-181218CR-* 262
CB-181407CR-* 262
CB-181411CR-* 262
CB-181418CR-* 262
CB-181607CR-* 262
CB-181611CR-* 262
CB-181618CR-* 262
CB-182007CR-* 262
CB-182011CR-* 262
CB-182018CR-* 262
CB-241207CR-* 262
CB-241211CR-* 262
CB-241218CR-* 262
CB-241407CR-* 262
CB-241411CR-* 262
CB-241418CR-* 262
CB-241607CR-* 262
CB-241611CR-* 262
CB-241618CR-* 262
CB-242007CR-* 262
CB-242011CR-* 262
CB-242018CR-* 262
CB-301207CR-* 262
CB-301211CR-* 262
CB-301218CR-* 262
CB-301407CR-* 262
CB-301411CR-* 262
CB-301418CR-* 262
CB-301607CR-* 262
CB-301611CR-* 262
CB-301618CR-* 262
CBLSL-181405-T-1 266
CBLSL-181410-T-1 266
CBLSL-181417-T-1 266
CBLSL-241405-T-1 266
CBLSL-241410-T-1 266
CBLSL-241417-T-1 266
CBLSL-301405-T-1 266
CBLSL-301410-T-1 266
CBLSL-301417-T-1 266
CBRSL-14-CR-1 272
CBRSL-14-MB-1 272
CBRSL-14-SN-1 272
CBSL-181405CR-* 265
CBSL-181405MB-* 265
CBSL-181410CR-* 265
CBSL-181410MB-* 265
CBSL-181417CR-* 265
CBSL-181417MB-* 265
CBSL-241405CR-* 265
CBSL-241405MB-* 265
CBSL-241410CR-* 265
CBSL-241410MB-* 265
CBSL-241417CR-* 265
CBSL-241417MB-* 265
CBSL-301405CR-* 265
CBSL-301405MB-* 265
CBSL-301410CR-* 265
CBSL-301410MB-* 265
CBSL-301417CR-* 265
CBSL-301417MB-* 265
CDR-21A-A 209
CDR-21C-A 209
CDR-21W-A 209
CH-241419-RM-217 ..... 249, 298
CHBI-241418-* 263
CHBI-241618-* 263
CHBI-242018-* 263
CHBI-301418-* 263
CHBI-301618-* 263
CIB-16CR 295
CJD-2414 302
CJD-24IN 302
CJD-24IS 302
CJD-DMB-KIT 302, 303
CK-1117-**-1 ..... 26, 29, 39, 49
CLVSL-CR-1 281
CLVSL-MB-1 281
CLVSL-SN-1 281
CMSL-1424-SM-1 287
CMSL-1448-SM-1 287
CMTWSL-1448-SM-1 287
CO-03S-1 158
CO-05M-1 158
CO-07L-1 158
CO-SET-1 158
CP-BAGROLL-1 ..... 26, 29, 39, 49
CP-FILTER-1 ..... 26, 29, 39, 49
CPDR-1826 300
CPDR-2635 300
CPDR-3548 300
CPDRSL-48MB 301
CPDRSL-48SC 301
CPUIBSL-14-SM-1 289
CPUIBSL-COVER-52 289
CRCSL-CR-1 277
CRCSL-MB-1 277
CRCSL-SN-1 277
CROIBSL-14-MB-1 291
CROIBSL-14-SM-1 291
CROIBSL-COVER-52 291
CRSL-96-CR-1 277
CRSL-96-MB-1 277
CRSL-96-SN-1 277
CSFRSL-14-CR-1 ..... 274, 276
CSOHSL-18-1 258
CSOHSL-24-1 258
CSOHSL-30-1 258
CSPD-14 299
CSPD-6 299
CSR-17CR-10 286
CSR-23CR-10 286
CSR-29CR-10 286
CSR-35CR-10 286
CSRSL-18MB-10 286
CSRSL-18SN-10 286
CSRSL-24MB-10 286
CSRSL-24SN-10 286
CSRSL-30MB-10 286
CSRSL-30SN-10 286
CSRSL-36MB-10 286
CSRSL-36SN-10 286
CSWBRSL-14-CR-1 270
CSWBRSL-14-MB-1 270
CSWBRSL-14-SC-1 270
CSWBRSL-14-SN-1 270
CSWIBSL-14-SM-1 293
CSWIBSL-COVER-52 293
CSWTRSL-14-CR-1 271
CSWTRSL-14-MB-1 271
CSWTRSL-14-SN-1 271
CT-1*-10 206
CT-1*-52 206
CT-2*-20 206
CT-2*-52 206
CT-3*-20 206
CT-3*-52 206
CT-4*-10 206
CT-4*-52 206
CTOHB-16-I-1 269
CTOHB-161319-CR-52 268
CTOHB-161319-SN-52 268
CTOHB-21-I-1 269
CTOHB-211319-CR-52 268
CTOHB-211319-SN-52 268
CTOHBSL-161419-CR-1 267
CTOHBSL-211419-CR-1 267
CTOHBSL-FS-1 ..... 267, 268
CTOHLSL-16-1 266
CTOHLSL-21-1 266
CTOHSL-18-1 267
CTOHSL-24-1 267
CTOHSL-30-1 267
CTOHT-16-I-1 269
CTOHT-21-I-1 269
CTRSL-14-CR-1 273
CTRSL-14-MB-1 273
CTRSL-14-SN-1 273
CV-RING-1 303
CVJD-1814UM-1 303
CVJD-2414UM-1 303
CVJD-3014UM-1 303
CVL-12-CR 282
CVL-12-MB 282
CVLPOSL-12-CR-1 280
CVLPOSL-14-CR-1 280
CVLPOSL-14-MB-1 280
CVLPOSL-14-SN-1 280
CVLSL-14-CR-1 280
CVLSL-14-MB-1 280
CVLSL-14-SN-1 280
CVR-12-CR 283
CVR-12-MB 283
CVR-14-CR 283
CVR-14-MB 283
CVRI-7-CR 282

CVRI-DG....282
CVRSL-14-CR-1....281
CVRSL-14-MB-1....281
CVRSL-14-SN-1....281
DPS-PEG-4SS....201
GCT-1*-10....206
GCT-1*-52....206
GCT-2*-20....206
GCT-2*-52....206
GCT-3*-20....206
GCT-3*-52....206
GCT-4*-10....206
GCT-4*-52....206
GLD-HK-2-NC-5....109, 172
GLD-HK-L-NC-7....109, 172
GLD-HK-S-NC-7....109, 172
GLD-W14-BC-5....109, 172
GLD-W14-SC-5....109, 172
GLD-W16-BC-5....109, 172
GLD-W22-BC-7....109, 172
GLD-W22-BG-7....172
GLD-W22-SC-7....109, 172
HPB-03323-52....
243, 244, 246, 250, 296
HPRV-1520 S....246
HPRV-1925 S....296
HPRV-1925DM S....296
HRV-1215 S....247
HRV-1220 S....247
HRV-1515 S....247
HRV-1520 S....247
HRV-1520-LINER....247
IDRB-1....137, 163
IRH-SM-1....259
JPE 301-12-020-1....339
JPE 301-34-0**-1....339
JPE 301-58-0**-1....339
L-12DCH60X1-1....
349, 351, 357, 359, 361, 370
L-12DCH60X1-1*....387
L-12DCH60X3-1....
349, 351, 357, 359, 361, 370
L-12DCH60X3-1*....387
L-12DCH60X5-120-277V-1....390
L-16CL2-WH50-1....406
L-1BRL5-1....
371, 378, 379, 388, 389, 390
L-24B2SPKT-2M-1....371, 379, 383
L-24B2SPKT-305MM-1....
371, 379, 383
L-24B2SPKT-3M-1....371, 379, 383
L-24BBEXT-1M-1....375, 407
L-24BBEXT-2M-1....375, 407
L-24BBEXT-3M-1....375, 407
L-24DCELT15WP-1....
371, 378, 379, 388
L-24DCELT48-BL-1....371, 378, 379
L-24DCELT96-1 . 371, 378, 379, 388
L-24DCH96X1-1....371, 378, 379
L-24DCH96X1-1*....389
L-24DCH96X3-1....371, 378, 379
L-24DCH96X3-1*....389
L-24DCH96X4-120-277V-1....
371, 378, 379, 390
L-24VDC3INADP-BL-1....402
L-24VDC3INADP-WH-1....402
L-CTCL-153P-WH-1....403
L-DC-ELT15WP-CON-1....
349, 351, 357, 359, 361, 370, 385
L-DC-ELT18-CON-1....370
L-DC-ELT6WP-CON-1....
349, 351, 357, 359, 361, 370, 385
L-DC-EQ30-1....
349, 351, 357, 359, 361, 370, 385
L-DC-EQ60-1....
349, 351, 357, 359, 361, 370, 385
L-DC-SLELT30-1....
349, 351, 357, 359, 361, 370, 384
L-DC-SLELT60-1....
349, 351, 357, 359, 361, 370, 384
L-DCE30D-CON-1....
349, 351, 357, 359, 361, 370, 386
L-DCE60D-CON-1....
349, 351, 357, 359, 361, 370, 386
L-EQW-KITD-**-1....399
L-EQW-KITMD-**-1....399
L-EUL-GTD2-1....361
L-EUL11W2-806CAL-1....361
L-EUL11W2-806WAL-1....361
L-EUL15W2-1111CAL-1....361
L-EUL15W2-1111WAL-1....361
L-EUL3W2-197CAL-1....361
L-EUL3W2-197WAL-1....361
L-EUL4W2-273CAL-1....361
L-EUL4W2-273WAL-1....361
L-EUL7W2-502CAL-1....361
L-EUL7W2-502WAL-1....361
L-EULNK2-120-WH-1....361
L-EULNK2-15-WH-1....361
L-EULNK2-180-WH-1....361
L-EULNK2-25-WH-1....361
L-EULNK2-60-WH-1....361
L-EXTBTB10-1....383
L-EXTMP-VHB-1....383
L-FLXCOB12-27RV-1....370
L-FLXCOB12-30RV-1....370
L-FLXCOB12-35RV-1....370
L-FLXCOB12-48RV-1....370
L-FLXCOB12-65RV-1....370
L-FLXCOB24-27RU-1....371
L-FLXCOB24-30RU-1....371
L-FLXCOB24-35RU-1....371
L-FLXCOB24-48RU-1....371
L-FLXCOB24-65RU-1....371
L-FLXTPE-30RH-1....366
L-FLXTPE-30RS-1....366
L-FPOC-HWB-ADP-BL-1....354
L-FPOC-HWB-ADP-WH-1....354
L-FPOC-LINKA-120-BL-1....353
L-FPOC-LINKA-120-WH-1....353
L-FPOC-LINKA-180-BL-1....353
L-FPOC-LINKA-180-WH-1....353
L-FPOC-LINKA-25-BL-1....353
L-FPOC-LINKA-25-WH-1....353
L-FPOC-LINKA-60-BL-1....353
L-FPOC-LINKA-60-WH-1....353
L-HWB-BL-T5-1....354
L-HWB-BL-T5-S-1....354
L-LED-DIMCON-BL-1....402
L-LED-DIMCON-WH-1....402
L-LED-DIMRMT-12V8A-1....400
L-LED-DIMRMT-12V8A-U-1*....400
L-LED-FLXTPE-CRHO-1....366
L-LED-FLXTPE-CROLL-1....366
L-LED-FLXTPE-NRHO-1....366
L-LED-FLXTPE-NROLL-1....366
L-LED-FLXTPE-WRHO-1....366
L-LED-FLXTPE-WROLL-1....366
L-LED-LINKD-120-1....374, 407
L-LED-LINKD-15-1....374, 407
L-LED-LINKD-180-1....374, 407
L-LED-LINKD-245-1....374, 407
L-LED-LINKD-25-1....374, 407
L-LED-LINKD-60-1....374, 407
L-LED-LINKD-8-1....374, 407
L-LED-LSKA1-1....334
L-LED-SMPLNK-120-1....359
L-LED-SMPLNK-15-1....359
L-LED-SMPLNK-180-1....359
L-LED-SMPLNK-25-1....359
L-LED-SMPLNK-5-1....359
L-LED-SMPLNK-60-1....359
L-LED-SMPTD4-1....359
L-LED-STKLNK-120-1....357
L-LED-STKLNK-15-1....357
L-LED-STKLNK-180-1....357
L-LED-STKLNK-25-1....357
L-LED-STKLNK-5-1....357
L-LED-STKLNK-60-1....357
L-LED-TPELNK-120-1....367
L-LED-TPELNK-15-1....367
L-LED-TPELNK-180-1....367
L-LED-TPELNK-25-1....367
L-LED-TPELNK-5-1....367
L-LED-TPELNK-60-1....367
L-LED-TPELNK-CON90-1....367
L-LED-TPELNK-TEE-1....367
L-LED-TPEPKT-2M-1....367, 370, 383
L-LED-TPEPKT-2M-TEE-1....367
L-LED-WCON-BL-1....406
L-LED-WCON-WH-1....406
L-MALE-AMP-10-1....407
L-MPOC-4W-120L-CBL-1....353
L-MPOC-4W-120L-CNI-1....353
L-MPOC-4W-120L-CWH-1....353
L-MPOC-4W-120L-WBL-1....353
L-MPOC-4W-120L-WNI-1....353
L-MPOC-4W-120L-WWH-1....353
L-MPOC-PKT8-BL-1....353
L-MPOC-PKT8-WH-1....353
L-N1-12PKT-2M-1....374
L-N1-12V3WM-27K-5M-1....374
L-N1-12V3WM-30K-5M-1....374
L-N1-12V3WM-35K-5M-1....374
L-N1-12V3WM-48K-5M-1....374
L-N1-12V3WM-65K-5M-1....374
L-N1-24PKT-2M-1....375
L-N1-24V3WM-27K-8M-1....374
L-N1-24V3WM-30K-8M-1....374
L-N1-24V3WM-35K-8M-1....374
L-N1-24V3WM-48K-8M-1....374
L-N1-24V3WM-65K-8M-1....374
L-N1-BTB-1....375
L-N1-ENDCAP-1....375
L-N1-LNK**-1....375
L-N1-LNK120-1....375
L-N1-LNK180-1....375
L-N1-LNK25-1....375
L-N1-LNK60-1....375
L-N1-UCLP-1....375
L-N2-12PKT-2M-1....374
L-N2-12V3WM-27K-5M-1....374
L-N2-12V3WM-30K-5M-1....374
L-N2-12V3WM-35K-5M-1....374

L-N2-12V3WM-48K-5M-1 374
L-N2-12V3WM-65K-5M-1 374
L-N2-24PKT-2M-1 375
L-N2-24V3WM-27K-8M-1 374
L-N2-24V3WM-30K-8M-1 374
L-N2-24V3WM-35K-8M-1 374
L-N2-24V3WM-48K-8M-1 374
L-N2-24V3WM-65K-8M-1 374
L-N2-BTB-1 375
L-N2-ENDCAP-1 375
L-N2-LNK**-1 375
L-N2-LNK120-1 375
L-N2-LNK180-1 375
L-N2-LNK25-1 375
L-N2-LNK60-1 375
L-N2-UCLP-1 375
L-PINEXT-1 407
L-POC-3EQFR-CBL-1 351
L-POC-3EQFR-CNI-1 351
L-POC-3EQFR-WBL-1 351
L-POC-3EQFR-WNI-1 351
L-POC-3LEDSFR-CBL-1 349
L-POC-3LEDSFR-CNI-1 349
L-POC-3LEDSFR-CWH-1 349
L-POC-3LEDSFR-NBL-1 349
L-POC-3LEDSFR-NNI-1 349
L-POC-3LEDSFR-WBL-1 349
L-POC-3LEDSFR-WNI-1 349
L-POC-3LEDSFR-WWH-1 349
L-R1020SWA-1 405
L-RDSW-1M-120-BL-1 353
L-RDSW-1M-120-WH-1 353
L-RDSW-1M-BL-1 402
L-RDSW-1M-WH-1 402
L-RDSW-2M-120-BL-1 353
L-RDSW-2M-120-WH-1 353
L-RDSW-2M-BL-1 402
L-RDSW-2M-WH-1 402
L-RSDIM-**-1 401
L-RSDS-**-1 401
L-RSDS2-**-1 401
L-RSMOT-NI-1 401
L-S16001WA-1 405
L-S16001WI000-1 354
L-SD3001WA-1 405
L-SD300WI000-1 354
L-SMPHO12-CNI-1 359
L-SMPHO12-WNI-1 359
L-SMPHO22-CNI-1 359
L-SMPHO22-WNI-1 359
L-SMPHO8-CNI-1 359
L-SMPHO8-WNI-1 359
L-SMR-2LED-BL-1 351
L-SMR-2LED-NI-1 351
L-SP15WA-30K-1 378
L-SP15WA-40K-1 378
L-SP15WA-50K-1 378
L-SP15WA-65K-1 378
L-SP8WA-30K-1 378
L-SP8WA-40K-1 378
L-SP8WA-50K-1 378
L-SP8WA-65K-1 378
L-SP90BTB4-1 378
L-SPBTB10-1 378
L-SPFL15WA-30K-1 379
L-SPFL15WA-40K-1 379
L-SPFL15WA-50K-1 379
L-SPFL15WA-65K-1 379
L-SPFL8WA-30K-1 379
L-SPFL8WA-40K-1 379
L-SPFL8WA-50K-1 379
L-SPFL8WA-65K-1 379
L-SPPKT-1M-1 378
L-SPPKT-305MM-1 378
L-SPPKT-3M-1 378
L-STKHO12-CNI-1 357
L-STKHO12-WNI-1 357
L-STKHO22-CNI-1 357
L-STKHO22-WNI-1 357
L-STKHO34-CNI-1 357
L-STKHO34-WNI-1 357
L-STKHO8-CNI-1 357
L-STKHO8-WNI-1 357
L-TPELED-27HER-1 366
L-TPELED-27SER-1 366
L-TPELED-30HER-1 366
L-TPELED-30SER-1 366
L-TPELED-35HER-1 366
L-TPELED-35SER-1 366
L-TPELED-48HER-1 366
L-TPELED-48SER-1 366
L-TPELED-65HER-1 366
L-TPELED-65SER-1 366
L-TPELNK-BTB-1 367
L-TPEPKT-2IN-1 ..... 367, 370, 383
L-TRANS-MNT-BL-1 .. 384, 385, 386, 387, 390
L-VHBTPE-1134-1 407
L-WI000UWA-1 405
L-WI001UWA-1 405
L-WI002UWA-1 405
L-WI004UWA-1 405
L-WLD-010V-W-120-277V-1 403
L-WLD-1REC-1 ... 392, 393, 394, 395
L-WLD-1RND-BL-1 394
L-WLD-1RND-NI-1 394
L-WLD-1WAL-**-1 393
L-WLD-2WAL-**-1 393
L-WLD-3RMT-BL-1 395
L-WLDS-BL-1 397
L-WLDS-NI-1 397
L-WLDSREC-1 396
L-WM5-BL-1 406
L-WM5-BR-1 406
L-WM5-WH-1 406
L-X**-DIFF-CL-1 382
L-X**-DIFF-FR-1 382
L-X**-DIFF-MLK-1 382
L-XANG72-SC-1 382
L-XANGECP-GY-1 382
L-XCRV72-SC-1 382
L-XCRVECP-GY-1 382
L-XFL72-SC-1 382
L-XFL94-SC-1 382
L-XLNK-120-**-1 383
L-XLNK-15-**-1 383
L-XLNK-180-**-1 383
L-XLNK-25-**-1 383
L-XLNK-60-**-1 383
L-XPKT-2IN-BL-1 383
L-XPKT-2IN-WH-1 383
L-XPKT-2M-BL-1 383
L-XPKT-2M-WH-1 383
L-XREC72-SC-1 382
L-XREC94-SC-1 382
L-XRECECP-GY-1 382
L-XRM42-155-1 383
L-XRND-UCLP-1 383
L-XRND72-SC-1 382
L-XRNDECP-GY-1 382
L-XSBTB-1 371
L-XSQR-UCLP-1 383
L-XSQR72-SC-1 382
L-XSQRECP-GY-1 382
L-XSQRSWCLP-1 383
LD-0220-45-40 94
LD-0220-50SC-40 94
LD-0220-50SCFO-40 94
LD-20-0431-5 338
LD-2061-18BM-**-1 307
LD-2061-24BM-**-1 307
LD-2061-28BM-**-1 307
LD-2061-32BM-**-1 307
LD-2062-18-**-1 307
LD-2062-18BM-**-1 307
LD-2062-24-**-1 307
LD-2062-24BM-**-1 307
LD-2062-28-**-1 307
LD-2062-28BM-**-1 307
LD-2062-32-**-1 307
LD-2062-32BM-**-1 307
LD-2063-1836-**-1 307
LD-2261-32BM-**-1 307
LD-2262-32-**-1 307
LD-2262-32BM-**-1 307
LD-24-04-5 338
LD-24-0436-5 338
LD-2472-18-**-1 307
LD-2472-18BM-**-1 307
LD-2472-24-**-1 307
LD-2472-24BM-**-1 307
LD-2472-28-**-1 307
LD-2472-28BM-**-1 307
LD-2472-32-**-1 307
LD-2472-32BM-**-1 307
LD-2473-1836-**-1 307
LD-24BM1-04-10 338
LD-24BM2-04-5 338
LD-2942-18-**-1 307
LD-2942-24-**-1 307
LD-2942-28-**-1 307
LD-4BW-001-18SB-1 319
LD-4BW-001-20SB-1 319
LD-4BW-001-24SB-1 319
LD-4BW-001-28SB-1 319
LD-4BW-001-32SB-1 319
LD-4BW-004-10 338
LD-4BW-004-4 338
LD-4BW-00436-4 338
LD-4BW-004BM2-4 338
LD-4BW-062-18-1 319
LD-4BW-062-20-1 319
LD-4BW-062-24-1 319
LD-4BW-062-28-1 319
LD-4BW-062-32-1 319
LD-4BW-063-1836-1 319
LD-4BW-063-2036-1 319
LD-4BW-201-20SBS-1 319
LD-4BW-201-28SBS-1 319
LD-4BW-201-32SBS-1 319
LD-4BW-204-4 338
LD-4BW-20436-4 338
LD-4BW-204BM1-8 338
LD-4BW-204BM2-4 338
LD-4BW-262-20-1 319
LD-4BW-262-28-1 319
LD-4BW-262-32-1 319
LD-4BW-263-2036-1 319

LD-4BW-401-28SBS-1.....319
LD-4BW-401-32SBS-1.....319
LD-4BW-404-4.....338
LD-4BW-472-24-1.....319
LD-4BW-472-28-1.....319
LD-4BW-472-32-1.....319
LD-4BW-942-28-1.....319
LD-4CT15-1.....204
LD-4CT21-1.....204
LD-4NW-001-18B-1.....327
LD-4NW-001-24B-1.....327
LD-4NW-001-28B-1.....327
LD-4NW-001-32B-1.....327
LD-4NW-072-18-1.....327
LD-4NW-072-24-1.....327
LD-4NW-072-28-1.....327
LD-4NW-072-32-1.....327
LD-4NW-073-1836-1.....327
LD-4NW-201-20BS-1.....327
LD-4NW-201-20TBS-1.....327
LD-4NW-201-28BS-1.....327
LD-4NW-201-32BS-1.....327
LD-4NW-201-32TBS-1.....327
LD-4NW-272-20-1.....327
LD-4NW-272-28-1.....327
LD-4NW-272-32-1.....327
LD-4NW-401-28BS-1.....328
LD-4NW-401-28TBS-1.....328
LD-4NW-401-32BS-1.....328
LD-4NW-401-32TBS-1.....328
LD-4NW-472-18-1.....328
LD-4NW-472-28-1.....328
LD-4NW-472-32-1.....328
LD-4NW-882-32-1.....77, 327
LD-4NW-882-35-1.....77, 327
LD-4NW-882-38-1.....77, 327
LD-4NW-942-28-1.....327
LD-597-12CR-1.....111
LD-597-12CR-10.....111
LD-597-18CR-1.....111
LD-597-18CR-10.....111
LD-6591-22-**-1.....88
LD-6591-22-**-10.....88
LD-6591-24-**-1.....88
LD-6591-24-**-10.....88
LD-6591-30-**-1.....88
LD-6591-30-**-10.....88
ML-MPHDSCCR-18.....155
ML-WNHDSCOG-18FL.....155
NSLS-KM-28S-7.....333
NSLS-KM-32S-7.....333
PSC-1814CR.....285
PSC-2414CR.....285
PSC-3014CR.....285
PSCSL-1814SC-MB-1.....284
PSCSL-1814SC-SN-1.....284
PSCSL-2414SC-MB-1.....284
PSCSL-2414SC-SN-1.....284
PSCSL-3014SC-MB-1.....284
PSCSL-3014SC-SN-1.....284
RAL-101-1.....86
RAS 305-12-0**-1.....339
RAS 305-34-0**-1.....339
RAS 305-58-0**-1.....339
RAS-CIB-COVER-R-52.....295
RAS-FD-KIT.....211
RAS-FDSM-DM15-1.....210
RAS-LGFD-52.....211
RAS-ML-HDCR.....155
RAS-ML-HDSC.....155
RAS-ML-HDSCOG.....155
RAS-SMFD-52.....211
RAS-VIB-COVER-52.....237, 295
RL-201-1.....86
RL-202-1.....86
RUKD-1420RB-1.....27, 241
RUKD-1432RB-1.....27, 241
RUKD-820-1.....27, 241
RUKD-932-1.....27, 241
RV DM KIT.....25, 29, 33, 246, 247
RV DM17 KIT.....26, 27, 29, 33, 241
RV-1024-17-10.....31
RV-1024-18-10.....31
RV-1024W.....31
RV-12KD-17C S.....26
RV-12KD-18C S.....26
RV-12KD-CK**-S.....26, 29
RV-12PB.....25
RV-12PB S.....25
RV-12PB-50.....25
RV-12PB-50 S.....25
RV-12PB-L.....25
RV-12PB-LE.....25
RV-15KD-17C S.....26
RV-15KD-18C S.....26
RV-15PB-2 S.....25
RV-18KD-17C S.....26
RV-18KD-18C S.....26
RV-18PB-1.....25
RV-18PB-2 S.....25
RV-20-14-6.....31
RV-20-6.....31
RV-32-11-8.....31
RV-32-14-8.....31
RV-32-17-8.....31
RV-35-12-8.....31
RV-35-13-8.....31
RV-35-17-8.....31
RV-35-18-8.....31
RV-35-8.....31
RV-35-LID-1.....32
RV-35-LID-12-1.....32
RV-35-LID-13-1.....32
RV-35-LID-17-1.....32
RV-35-LID-18-1.....32
RV-35-LID-G-1.....32
RV-50-12-8.....31
RV-50-13-8.....31
RV-50-17-8.....31
RV-50-8.....31
RV-50-LID-1.....32
RV-50-LID-12-1.....32
RV-50-LID-13-1.....32
RV-50-LID-17-1.....32
RV-50-LID-18-1.....32
RV-50-LID-G-1.....32
RV-9PB.....25
RV-9PB S.....25
RV-DM-FDKIT.....211
SBDT-2730-A-1.....85
SBDT-2730-OG-1.....85
SBDT-2730-S-1.....85
SBDT-3336-A-1.....85
SBDT-3336-OG-1.....85
SBDT-3336-S-1.....85
SBDT-3942-A-1.....85
SBDT-3942-OG-1.....85
SBDT-3942-S-1.....85
SBVDT-2124-A-1.....255
SBVDT-2124-A-12.....255
SBVDT-2124-S-1.....255
SBVDT-2124-S-12.....255
SBVDT-2730-A-1.....255
SBVDT-2730-A-12.....255
SBVDT-2730-S-1.....255
SBVDT-2730-S-12.....255
SBVDT-3336-A-1.....255
SBVDT-3336-A-12.....255
SBVDT-3336-S-1.....255
SBVDT-3336-S-12.....255
SINGLE 30 QT.....25
SINGLE 50 QT.....35
ST-97-**-4.....89, 223
ST50-21*-12.....208
ST50-21*-52.....208
TRC-12CR.....279
TRC-12MB.....279
TRC-12NS-CR.....278
TRC-14CR.....279
TRCSL-14NS-CR-1.....276
TWCSC-1550DM-1.....36
TWCSC-15DM-1.....36
TWCSC-1850DM-2.....36
TWCSC-18DM-2.....36
TWCSC-2150DM-2.....36
TWCSC-21DM-2.....36
TWCSD-1550DM-1.....36
TWCSD-15DM-1.....36
TWCSD-1850DM-2.....36
TWCSD-18DM-2.....36
TWCSD-2150DM-2.....36
TWCSD-21DM-2.....36
UT-10*-10.....207
UT-10*-52.....207
UT-12*-20.....207
UT-12*-52.....207
UT-15*-20.....207
UT-15*-52.....207
UT-18*-10.....207
UT-18*-52.....207
VIB-20CR.....237, 295

KITCHEN DEALER PROGRAM

Rev-A-Shelf's Kitchen Dealer Program is the perfect solution for cabinet shops and designers. Our program binder is designed to help you add value with Rev-A-Shelf® products to all of your kitchen projects. Members are sent quarterly updates on the latest innovations from Rev-A-Shelf®. Ask your authorized distributor to sign you up today!

REV-A-SHELF®
Innovation through Organization™

DISPLAY PROGRAM

Our complete line of cabinet storage organizing accessories boast distinct advantages in strength, design, ease of installation and aesthetics that can only be sold effectively through working displays. Many of our customers experience great results by installing products in kitchen dealer, custom shops and home center kitchen and bath displays. We also have floor displays and salesman samples available that can further serve as effective tools.

Our Program: A 50% discount is available to you, the distributor, for each display product unit placed in a showroom or display unit placed in a showroom or display fixture. Verification of installment to claim the rebate should be handled through your Rev-A-Shelf®representative on a monthly basis. Proper documentation with contact info must be provided for each discounted product.

⚠ PROP 65 FOR CALIFORNIA RESIDENTS

The safety of our customers and employees is of highest priority for Rev-A-Shelf. We want to assure you of our 30 + year commitment to offering among the highest quality and safest products in the industry. Rev-A-Shelf® has always abided by state and federal regulations. California voters approved Proposition 65 in 1986, creating the Safe Drinking Water and Toxic Enforcement Act. Despite differing opinions about recent California label requirements with this California law, Rev-A-Shelf® must honor these compliance regulations.

Most importantly, we promise to also honor the trust you have placed in us with your purchase or possible purchase of our products. We will honor your trust by offering organizational products of enduring quality, lasting beauty and uncompromising safety to you and your family.

DISCLAIMER

Rev-A-Shelf makes every effort to verify and ensure that our product specifications are correct and up to date. We reserve the right to make engineering changes that affect any critical product dimension without notice. Rev-A-Shelf® shall not be held liable for any cost related to such a change, misprint, instruction, or product template error.

WARRANTY

REV-A-SHELF® COMPANY, LLC ("REV-A-SHELF®") WARRANTS ITS PRODUCTS (INCLUDING BUT NOT LIMITED TO THOSE WITH THE REV-A-SHELF® AND TRESCO LIGHTING® BRANDS) (HEREIN, "PRODUCTS") TO BE FREE FROM DEFECTS IN MATERIAL AND WORKMANSHIP FOR A LIMITED PERIOD OF TIME FROM THE DATE OF ORIGINAL PURCHASE AS SPECIFIED IN THE REV-A-SHELF COMPANY, LLC LIMITED WARRANTY DURATION CHART ("DURATION CHART") AT www.rev-a-shelf.com/our-warranty. YOU MAY ALSO CONTACT REV-A-SHELF® AT 1.800.626.1126 FOR A COPY OF THE DURATION CHART. THIS WARRANTY IS LIMITED TO THE ORIGINAL END USER OF THE PRODUCTS.

BECAUSE REV-A-SHELF® CANNOT CONTROL THE QUALITY OF PRODUCTS SOLD BY UNAUTHORIZED SELLERS, THIS LIMITED WARRANTY APPLIES ONLY TO PRODUCTS THAT WERE PURCHASED FROM REV-A-SHELF OR A REV-A-SHELF® AUTHORIZED SELLER, UNLESS OTHERWISE PROHIBITED BY LAW. REV-A-SHELF® RESERVES THE RIGHT TO REJECT WARRANTY CLAIMS FOR PRODUCTS PURCHASED FROM UNAUTHORIZED SELLERS, INCLUDING UNAUTHORIZED INTERNET SITES.

WARRANTY CONT'D

THIS LIMITED WARRANTY ALSO DOES NOT COVER ANY DEFECTS DUE TO NORMAL WEAR AND TEAR, DAMAGE DUE TO MISUSE, ALTERATION TO THE PRODUCT, NEGLIGENCE, OR FOR ANY FAILURE OF THE PRODUCTS THAT RESULTS FROM EXTERNAL CAUSES SUCH AS: ACTS OF NATURE; PHYSICAL DAMAGE; EXPOSURE TO ADVERSE OR HAZARDOUS CHEMICAL OR OTHER SUBSTANCES, USE OF REACTIVE CLEANING AGENTS AND/OR HARSH CHEMICALS TO CLEAN THE PRODUCTS; ENVIRONMENTAL CONDITIONS; VANDALISM; FIRE; POWER FAILURE, IMPROPER POWER SUPPLY, POWER SURGES OR DIPS; IMPROPER USE, INSTALLATION, HANDLING, ALTERATION, STORAGE, THE FAILURE TO ABIDE BY ANY PRODUCT CLASSIFICATIONS OR CERTIFICATIONS, OR FAILURE TO COMPLY WITH ANY APPLICABLE STANDARDS, CODES, RECOMMENDATIONS, PRODUCT SPECIFICATION SHEETS OR INSTRUCTION SHEETS BY REV-A-SHELF®; FAILURES OR PERFORMANCE ISSUES ARISING FROM USE OF THE PRODUCTS WITH THIRD PARTY PRODUCTS, PROCESSES, OR MATERIALS SUPPLIED BY ANY END USER OR THIRD PARTY. THIS LIMITED WARRANTY ALSO DOES NOT COVER ANY REPLACEABLE BATTERIES INCLUDED WITH ITEMS OR CORDS OF ANY TYPE.
THERE ARE NO WARRANTIES WHICH EXTEND BEYOND THOSE STATED HEREIN. ANY IMPLIED WARRANTIES THAT MAY BE APPLICABLE TO PRODUCTS, INCLUDING IMPLIED WARRANTIES OF MERCHANTABILITY OR FITNESS FOR A PARTICULAR PURPOSE, ARE LIMITED IN DURATION TO THE DURATION OF THIS WARRANTY. SOME STATES DO NOT ALLOW LIMITATIONS ON HOW LONG AN IMPLIED WARRANTY LASTS, SO THE ABOVE LIMITATION MAY NOT APPLY TO YOU.

REV-A-SHELF SHALL NOT BE LIABLE FOR INCIDENTAL OR CONSEQUENTIAL LOSSES, DAMAGES OR EXPENSES, DIRECTLY OR INDIRECTLY ARISING FROM THE SALE, HANDLING OR USE OF THE PRODUCTS, OR FROM ANY OTHER CAUSE RELATING DIRECTLY OR INDIRECTLY THERETO, AND REV-A-SHELF'S LIABILITY IN ANY CASE IS EXPRESSLY LIMITED TO THE REPAIR OR REPLACEMENT (IN THE FORM ORIGINALLY SHIPPED) OF THE DEFECTIVE PRODUCTS, OR, AT REV-A-SHELF'S ELECTION, TO THE REPAYMENT OF, OR CREDIT OF, CLAIMANT WITH AN AMOUNT EQUAL TO THE PURCHASE PRICE OF SUCH PRODUCT, WHETHER SUCH CLAIMS ARE FOR BREACH OF WARRANTY, NEGLIGENCE, OR OTHERWISE. ANY ACTION FOR DAMAGE MUST BE COMMENCED AFTER THE ACCRUAL OF THE CAUSE OF ACTION. **SOME STATES DO NOT ALLOW THE EXCLUSION OR LIMITATION OF INCIDENTAL OR CONSEQUENTIAL DAMAGES, SO THE ABOVE LIMITATION OR EXCLUSION MAY NOT APPLY TO YOU. THIS WARRANTY GIVES YOU SPECIFIC LEGAL RIGHTS, AND YOU MAY ALSO HAVE OTHER RIGHTS WHICH VARY FROM STATE TO STATE.**

To make a warranty claim, please contact Rev-A-Shelf® at 1.800.626.1126 and be prepared to answer questions regarding the Product and its condition, the original date of purchase, and from whom you purchased the Product. Rev-A-Shelf® reserves the right to request proof of purchase, in it its sole discretion.

Rev-A-Shelf® shall have the right to require the claimant, at claimant's expense, to return to a designated factory for inspection or repair any Product claimed to be defective. The determination of Rev-A-Shelf® as to the existence of a valid claim for replacement, repair, refund, or Rev-A-Shelf® credit under this warranty, shall be conclusive. Claimant shall be responsible for the labor costs in removing a defective Product. Claimant shall also be responsible for the shipping and handling costs associated with any repaired product or replacement product. In limited circumstances, Rev-A-Shelf®, in its sole discretion, may waive such fees. Replacement parts shall be furnished F.O.B. factory. Any Product that is returned without production code stickers or stamps will automatically be denied under these warranty terms.

DISCLAIMER

Warranty Effective Date: March 15th, 2020

Rev-A-Shelf makes every effort to verify and ensure that our product specifications are correct and up to date. However we reserve the right to make engineering changes that affect any critical product dimension without notice. Rev-A-Shelf shall not be held liable for any cost related to such change, misprint, instruction, or product template error.

REV·A·SHELF®

Innovation through Organization™

WE ARE HONORED!

Rev-A-Shelf is a proud sponsor of the nonprofit organization, Homes for Our Troops, which builds specially adapted, mortgage-free homes nationwide for the most severely injured Veterans of Post 9/11, to enable them to rebuild their lives. During the three year partnership, Rev-A-Shelf will work with Homes for Our Troops' Veterans and general contractors to furnish all homes with cabinet storage and organization accessories, providing optimal accessibility for home recipients. "We are honored to participate in this program to supports our nation's brave service members," said David Noe, general manager of Rev-A-Shelf, LLC. "Homes for Our Troops is doing an excellent service for America's injured Veterans, and we are proud to partner with this wonderful organization."

(HFOT) is a privately funded 501(c) (3) nonprofit organization that builds specially adapted, mortgage-free homes nationwide for the most severely injured Veterans from Iraq and Afghanistan. Most of these Veterans have sustained life-altering injuries including multiple limb amputations, partial or full paralysis, and/or severe traumatic brain injury (TBI). These homes restore some of the freedom and independence our Veterans sacrificed while defending our country, and enable them to focus on their family, recovery, and rebuilding their lives. Since its founding in 2004, nearly 90 cents of every dollar donated to HFOT has gone directly to our program services for Veterans. HFOT builds these homes where the Veteran chooses to live, and continues its relationship with the Veterans after home delivery to assist them with rebuilding their lives. For more information about Rev-A-Shelf's partnership with Homes for Our Troops, visit www.hfotusa.org.